IFB DACW61-00-B-0008

US Army Corps
of Engineers
Philadelphia District

Miscellaneous Repairs
Delaware City and Reedy Point Bridges

Inland Waterway
Delaware River to Chesapeake Bay
Delaware and Maryland

Construction Solicitation and Specifications

25 January 2000

THIS PAGE HAS BEEN LEFT INTENTIONALLY BLANK

CAUTION TO BIDDERS

All information required by the terms of the Solicitation must be furnished. **MISTAKES OR OMISSIONS CAN BE COSTLY**. Important items for you to check are included in but not limited to those listed below. **This checklist is furnished only to assist you in submitting a proper bid.** Check as you read.

[ ] Are you registered in the Central Contractor Database? See DFARS Clause 52.204-7004 "REQUIRED CENTRAL CONTRACTOR REGISTRATION" in Section 00700 of this solicitation?

[ ] Have you acknowledged all amendments? Have you submitted your bid on the latest amended bid schedule?

[ ] Have you completed the "Representations and Certifications" {Section 00600} portion of the Solicitation? Is your Contractor Establishment Code listed on the Standard Form 1442?

[ ] Is your bid properly signed by an officer of your company?

[ ] If a bid guarantee is required, is it included with your bid {A late bid guarantee is treated the same as a late bid.} ***and*** is it in the proper amount? {Usually 20 percent of the **total** bid price, including any options or additives.} If your bid guarantee is in the form of a bid bond, is the bond properly signed by both the bidder and surety and are all required seals affixed? A bid guarantee is required when your bid exceeds $100,000.00.

[ ] Is the name in which you submitted the bid the same on your bid as on the bid bond?

[ ] If required, have you entered a unit price for each bid item? {The solicitation will specifically state when this is necessary.}

[ ] The Government may reject a bid as nonresponsive if it is materially and mathematically unbalanced as to price for any bid item or combination of items. A bid is unbalanced when it is based on prices significantly less than cost for some work and prices which are significantly overstated for other work.

[ ] Are decimals in unit prices in the proper places? Are your figures legible?

[ ] Are the extensions of your unit prices, and your total bid price correct?

[ ] Are all erasures or corrections initialed by the person signing the bid?

[ ] Have you restricted your bid by altering the provisions of the solicitation?

[ ] If you are a large business and your bid is greater than $1,000,000.00 have you included your Sub-Contracting Plan in your bid package? {NOTE: **AN AWARD WILL NOT BE MADE WITHOUT AN APPROVED SUB-CONTRACTING PLAN. IN ORDER TO BE APPROVED YOUR PLAN MUST DESIGNATE 5% OF THE TOTAL SUB-CONTRACTING DOLLARS TO SMALL DISADVANTAGED BUSINESSES**}.

[ ] Is the envelope containing your bid properly identified that it is a sealed bid and does it contain the correct solicitation number and bid opening time?

[ ] Will your bid arrive on time? See paragraph entitled "Late Submissions, Modifications, and Withdrawals of Bids" in the Instructions to Bidders {Section 00100} of the solicitation.

July 02, 1998

THIS PAGE HAS BEEN LEFT INTENTIONALLY BLANK

INVITATION NO. DACW61-00-B-0008

PHILADELPHIA DISTRICT
CORPS OF ENGINEERS

INVITATION FOR BIDS
FOR

MISCELLANEOUS REPAIRS
DELAWARE CITY AND REEDY POINT BRIDGES

INLAND WATERWAY
DELAWARE RIVER TO CHESAPEAKE BAY
DELAWARE AND MARYLAND

I. NOTE THE AFFIRMATIVE ACTION REQUIREMENT OF THE EQUAL OPPORTUNITY CLAUSE WHICH MAY APPLY TO THE CONTRACT RESULTING FROM THIS SOLICITATION.

II. BIDDERS ARE REQUIRED TO COMPLETE THE REPRESENTATIONS AND CERTIFICATIONS PORTION OF SECTION 00600 OF THIS SOLICITATIONS AND SUBMIT THIS WITH THEIR BID.

III. SITE INSPECTION WILL BE HELD 10 FEBRUARY 2000 AM AT THE PROJECT SITE, AT THE PARKING LOT ON THE WEST SIDE OF ROUTE 9 JUST TO THE NORTH OF THE DELAWARE CITY BRIDGE. NO RAIN DATE IS SCHEDULED. ALL THOSE PLANNING TO ATTEND SHOULD CONTACT LISA RIDDICK AT 215-656-6610.

25 June 1999

THIS PAGE HAS BEEN LEFT INTENTIONALLY BLANK

Main Table of Contents

Solicitation, Offer, and Award (SF 1442)

Section	Title	Page Nos.
00010	SF 1442 and Bidding Schedule	00010-1 to 00010-4
00100	Instructions, Conditions and Notice to Bidders	00100-1 to 00100-5
00600	Representations and Certifications	00600-1 to 00600-9
00700	Contract Clauses	00700-1 to 00700-92
00800	Special Contract Requirements	00800-1 to 00835-1
01010	Specifications	01010-1 to 09900-7

THIS PAGE HAS BEEN LEFT INTENTIONALLY BLANK

TABLE OF CONTENTS

SECTION 00010

SOLICITATION, OFFER, AND AWARD (SF 1442)
AND
BIDDING SCHEDULE

TITLE	PAGE NOS.
Solicitation, Offer & Award (SF 1442)	00010-1
Bidding Schedule	00010-4

THIS PAGE HAS BEEN LEFT INTENTIONALLY BLANK

SOLICITATION, OFFER, AND AWARD (Construction, Alteration, or Repair)	1. SOLICITATION NO. DACW61-00-B-0008	2. TYPE OF SOLICITATION [X] SEALED BID (IFB) [ ] NEGOTIATED (RFP)	3. DATE ISSUED 01/25/00	PAGE OF PAGES

IMPORTANT - The "offer" section on the reverse must be fully completed by offeror.

4. CONTRACT NO.	5. REQUISITION/PURCHASE REQUEST NO. W25PHS-9333-8152	6. PROJECT NO. DACW61-00-B-0008

7. ISSUED BY CODE W25PHS

US ARMY ENGINEER DISTRICT, PHILADELPHIA
WANAMAKER BUILDING, RM 643
100 PENN SQUARE EAST
PHILADELPHIA, PA 19107-3390

8. ADDRESS OFFER TO

US ARMY ENGINEER DISTRICT, PHILADELPHIA
WANAMAKER BUILDING, RM 643
100 PENN SQUARE EAST
PHILADELPHIA, PA 19107-3390

9. FOR INFORMATION CALL: A. NAME SANDI FLETCHER S05 B. TELEPHONE NO. (Include area code) (NO COLLECT CALLS) (215) 656-6915

NOTE: In sealed bid solicitations "offer" and "offeror" mean "bid" and "bidder".

10. THE GOVERNMENT REQUIRES PERFORMANCE OF THE WORK DESCRIBED IN THESE DOCUMENTS (Title, identifying no., date):

PROJECT TITLE: Miscellaneous Repairs Delaware City and Reedy Point Bridges, C&D Canal, New Castle County, Delaware

SOLICITATION NO: DACW61-00-B-0008

ISSUE DATE: 25 January 2000

BID OPENING DATE: 24 February 2000 - 11:00 a.m.

THIS PROCUREMENT IS UNRESTRICTED

11. The Contractor shall begin performance within 10 calendar days and complete it within 180 calendar days after receiving

[ ] award, [X] notice to proceed. This performance period is [X] mandatory, [ ] negotiable. (See _____.)

12A. THE CONTRACTOR MUST FURNISH ANY REQUIRED PERFORMANCE AND PAYMENT BONDS? (If "YES," indicate within how may calendar days after award in Item 12B.)

[X] YES [ ] NO

12B. CALENDAR DAYS 010

13. ADDITIONAL SOLICITATION REQUIREMENTS:

A. Sealed offers in original and 1 copies to perform the work required are due at the place specified in Item 8 by 11:00 a.m. (hour) local time 02/24/00 (date). If this is a sealed bid solicitation, offers will be publicly opened at that time. Sealed envelopes containing offers shall be marked to show the offeror's name and address, the solicitation number, and the date and time offers are due.

B. An offer guarantee [X] is, [ ] is not required.

C. All offers are subject to the (1) work requirements, and (2) other provisions and clauses incorporated in the solicitation in full text or by reference.

D. Offers providing less than 60 calendar days for Government acceptance after the date offers are due will not be considered and will be rejected.

OFFER *(Must be fully completed by offeror)*

14. NAME AND ADDRESS OF OFFEROR *(Include ZIP Code)*	15. TELEPHONE NO. *(Include area code)*
	16. REMITTANCE ADDRESS *(Include only if different than Item 14)*
CODE FACILITY CODE	

The offeror agrees to perform the work required at the prices specified below in strict accordance with the terms of this solicitation, if this offer is accepted by the Government in writing within _____ calendar days after the date offers are due. *(Insert any number equal to or greater than the minimum requirement stated in Item 13D. Failure to insert any number means the offeror accepts the minimum in Item 13D.*

AMOUNTS ▶

18. The offeror agrees to furnish any required performance and payment bonds.

19. ACKNOWLEDGMENT OF AMENDMENTS

(The offeror acknowledges receipt of amendments to the solicitation - give number and date of each)

AMENDMENT NO.										
DATE										

20A. NAME AND TITLE OF PERSON AUTHORIZED TO SIGN OFFER *(Type or print)*	20B. SIGNATURE	20C. OFFER DATE

AWARD *(To be completed by Government)*

21. ITEMS ACCEPTED:

22. AMOUNT	23. ACCOUNTING AND APPROPRIATION DATA
24. SUBMIT INVOICES TO ADDRESS SHOWN IN *(4 Copies unless otherwise specified)* ▶ ITEM	25. OTHER THAN FULL AND OPEN COMPETITION PURSUANT TO ☐ 10 U.S.C 2304(c) ( ) ☐ 41 U.S.C 253(c) ( )
26. ADMINISTERED BY CODE	27. PAYMENT WILL BE MADE BY

CONTRACTING OFFICER WILL COMPLETE ITEM 28 OR 29 AS APPLICABLE

☐ 28. NEGOTIATED AGREEMENT *Contractor is required to sign this document and return _____ copies to issuing office.)* Contractor agrees to furnish and deliver all items or perform all work requirements identified on this form and any continuation sheets for the consideration stated in this contract. The rights and obligations of the parties to this contract shall be governed by (a) this contract award, (b) the solicitation, and (c) the clauses, representations, certifications, and specifications incorporated by reference in or attached to this contract.

☐ 29. AWARD *(Contractor is not required to sign this document.)* Your offer on this solicitation is hereby accepted as to the items listed. This award con- summates the contract, which consists of (a) the Government solicitation and your offer, and (b) this contract award. No further contractual document is necessary.

30A. NAME AND TITLE OF CONTRACTOR OR PERSON AUTHORIZED TO SIGN *(Type or print)*	31A. NAME OF CONTRACTING OFFICER *(Type or print)*
30B. SIGNATURE / 30C. DATE	31B. UNITED STATES OF AMERICA BY / 31C. AWARD DATE

BIDDING SCHEDULE
(To be attached to SF 1442)

Item No.	Description	Estimated Quantity	Unit	Unit Price	Estimated Amount
Delaware City Bridge					
D1.	Traffic Control	1	Job	LS	$
D2.	Replace Sidewalk and Curb	1	Job	LS	$
D3.	Horizontal Concrete Spall Repairs	48	S.F.	$	$
D4.	Vertical Concrete Spall Repairs	92	S.F.	$	$
D5.	Approach Slab/Roadway Spall Repairs	70	S.F.	$	$
D6.	Crack Sealing in Approach Roadways	1	Job	LS	$
D7.	Joint Sealing in Approach Roadways	1	Job	LS	$
D8.	Roadway Dam Plate Repair	1	Job	LS	$
D9.	Repair Bridge Sidewalk	1	Job	LS	$
D10.	Timber Fender Repairs	1	Job	LS	$
D11.	Replace Girder Opening Frame Seals	1	Job	LS	$
Reedy Point Bridge					
R1.	Traffic Control	1	Job	LS	$
R2.	Drainage Repairs				
R2a.	Downspout Support Repairs	1	Job	LS	$
R2b.	Downspout Extension and Support Repairs, PP0 West, Anchor Truss	1	Job	LS	$
R2c.	Downspout Extensions	1	Job	LS	$
R3.	Guardrail Modifications	1	Job	LS	$
R4.	Bridge Railing Repairs	1	Job	LS	$

R5.	Bridge Railing Hardware Replacement	1	Job	LS	$
R6.	Horizontal Concrete Spall Repairs	367	S.F.	$	$
R7.	Vertical/Overhead Concrete Spall Repairs	300	S.F.	$	$
R8.	Approach Roadway Joint Repairs	568	S.F.	$	$
R9.	Approach Roadway Spall Repairs	36	S.F.	$	$
R10.	Crack Sealing in Approach Roadways and Shoulders	1	Job	LS	$
R11.	Bridge Pier Crack Repair	361	L.F.	$	$
R12.	Fastener Replacement	50	Each	$	$
R13.	Steel Deck Form Removal	600	S.F.	$	$
R14.	Ladder and Cage Modifications	1	Job	LS	$
R15.	Walkway Transverse Support Repair	1	Job	LS	$
R16.	Walkway Repair, Panel Point 13	1	Job	LS	$
R17.	Drainage Hole Drilling	1	Job	LS	$
R18.	Tack Weld Removal and Dye Penetrant Testing	1	Job	LS	$
R19.	Replace Joint Seals	1	Job	LS	$
R20.	Clean and Lubricate Bridge Bearings	1	Job	LS	$

TOTAL ESTIMATED AMOUNT $

SECTION 00100 Bidding Schedule/Instructions to Bidders

CLAUSES INCORPORATED BY FULL TEXT

52.214-1 SOLICITATION DEFINITIONS--SEALED BIDDING (JUL 1987)

"Government" means United States Government.

"Offer" means "bid" in sealed bidding.

"Solicitation" means an invitation for bids in sealed bidding.

(End of provision)

52.214-3 AMENDMENTS TO INVITATIONS FOR BIDS (DEC 1989)

(a) If this solicitation is amended, then all terms and conditions which are not modified remain unchanged.

(b) Bidders shall acknowledge receipt of any amendment to this solicitation (1) by signing and returning the amendment, (2) by identifying the amendment number and date in the space provided for this purpose on the form for submitting a bid, (3) by letter or telegram, or (4) by facsimile, if facsimile bids are authorized in the solicitation. The Government must receive the acknowledgment by the time and at the place specified for receipt of bids.

(End of provision)

52.214-4 FALSE STATEMENTS IN BIDS (APR 1984)

Bidders must provide full, accurate, and complete information as required by this solicitation and its attachments. The penalty for making false statements in bids is prescribed in 18 U.S.C. 1001.

(End of provision)

52.214-5 SUBMISSION OF BIDS (MAR 1997)

(a) Bids and bid modifications shall be submitted in sealed envelopes or packages (unless submitted by electronic means) (1) addressed to the office specified in the solicitation, and (2) showing the time and date specified for receipt, the solicitation number, and the name and address of the bidder.

(b) Bidders using commercial carrier services shall ensure that the bid is addressed and marked on the outermost envelope or wrapper as prescribed in subparagraphs (a)(1) and (2) of this provision when delivered to the office specified in the solicitation.

(c) Telegraphic bids will not be considered unless authorized by the solicitation; however, bids may be modified or withdrawn by written or telegraphic notice.

(d) Facsimile bids, modifications, or withdrawals, will not be considered unless authorized by the solicitation.

(e) Bids submitted by electronic commerce shall be considered only if the electronic commerce method was specifically stipulated or permitted by the solicitation.

52.214-6 EXPLANATION TO PROSPECTIVE BIDDERS (APR 1984)

Any prospective bidder desiring an explanation or interpretation of the solicitation, drawings, specifications, etc., must request it in writing soon enough to allow a reply to reach all prospective bidders before the submission of their bids. Oral explanations or instructions given before the award of a contract will not be binding. Any information given a prospective bidder concerning a solicitation will be furnished promptly to all other prospective bidders as an amendment to the solicitation, if that information is necessary in submitting bids or if the lack of it would be prejudicial to other prospective bidders.

(End of provision)

52.214-7 LATE SUBMISSIONS, MODIFICATIONS, AND WITHDRAWALS OF BIDS (NOV 1999)

(a) Bidders are responsible for submitting bids, and any modifications or withdrawals, so as to reach the Government office designated in the invitation for bids (IFB) by the time specified in the IFB. If no time is specified in the IFB, the time for receipt is 4:30 p.m., local time, for the designated Government office on the date that bids are due.

(b)(1) Any bid, modification, or withdrawal received at the Government office designated in the IFB after the exact time specified for receipt of bids is ``late'' and will not be considered unless it is received before award is made, the Contracting Officer determines that accepting the late bid would not unduly delay the acquisition; and--

(i) If it was transmitted through an electronic commerce method authorized by the IFB, it was received at the initial point of entry to the Government infrastructure not later than 5:00 p.m. one working day prior to the date specified for receipt of bids; or

(ii) There is acceptable evidence to establish that it was received at the Government installation designated for receipt of bids and was under the Government's control prior to the time set for receipt of bids.

(2) However, a late modification of an otherwise successful bid that makes its terms more favorable to the Government, will be considered at any time it is received and may be accepted.

(c) Acceptable evidence to establish the time of receipt at the Government installation includes the time/date stamp of that installation on the bid wrapper, other documentary evidence of receipt maintained by the installation, or oral testimony or statements of Government personnel.

(d) If an emergency or unanticipated event interrupts normal Government processes so that bids cannot be received at the Government office designated for receipt of bids by the exact time specified in the IFB and urgent Government requirements preclude amendment of the IFB, the time specified for receipt of bids will be deemed to be extended to the same time of day specified in the solicitation on the first work day on which normal Government processes resume.

(e) Bids may be withdrawn by written notice received at any time before the exact time set for receipt of bids. If the IFB authorizes facsimile bids, bids may be withdrawn via facsimile received at any time before the exact time set for receipt of bids, subject to the conditions specified in the provision at 52.214-31, Facsimile Bids. A bid may be withdrawn in person by a bidder or its authorized representative if, before the exact time set for receipt of bids, the identity of the person requesting withdrawal is established and the person signs a receipt for the bid.

(End of provision)

52.214-17 AFFILIATED BIDDERS (APR 1984)

(a) Business concerns are affiliates of each other when, either directly or indirectly, (1) one concern controls or has the power to control the other, or (2) a third party controls or has the power to control both.

(b) Each bidder shall submit with its bid an affidavit stating that it has no affiliates, or containing the following information:

(1) The names and addresses of all affiliates of the bidder.

(2) The names and addresses of all persons and concerns exercising control or ownership of the bidder and any or all of its affiliates, and whether they exercise such control or ownership as common officers, directors, stockholders holding controlling interest, or otherwise.

52.214-18 PREPARATION OF BIDS--CONSTRUCTION (APR 1984)

(a) Bids must be (1) submitted on the forms furnished by the Government or on copies of those forms, and (2) manually signed. The person signing a bid must initial each erasure or change appearing on any bid form.

(b) The bid form may require bidders to submit bid prices for one or more items on various bases, including--

(1) Lump sum bidding;

(2) Alternate prices;

(3) Units of construction; or

(4) Any combination of subparagraphs (1) through (3) above.

(c) If the solicitation requires bidding on all items, failure to do so will disqualify the bid. If bidding on all items is not required, bidders should insert the words "no bid" in the space provided for any item on which no price is submitted.

(d) Alternate bids will not be considered unless this solicitation authorizes their submission.

52.214-19 CONTRACT AWARD--SEALED BIDDING--CONSTRUCTION (AUG 1996)

(a) The Government will evaluate bids in response to this solicitation without discussions and will award a contract to the responsible bidder whose bid, conforming to the solicitation, will be most advantageous to the Government, considering only price and the price-related factors specified elsewhere in the solicitation.

(b) The Government may reject any or all bids, and waive informalities or minor irregularities in bids received.

(c) The Government may accept any item or combination of items, unless doing so is precluded by a restrictive limitation in the solicitation or the bid.

(d) The Government may reject a bid as nonresponsive if the prices bid are materially unbalanced between line items or subline items. A bid is materially unbalanced when it is based on prices significantly less than cost for some work and prices which are significantly overstated in relation to cost for other work, and if there is a reasonable doubt that the bid will result in the lowest overall cost to the Government even though it may be the low evaluated bid, or if it is so unbalanced as to be tantamount to allowing an advance payment.

52.214-5000 ARITHMETIC DISCREPANCIES (MAR 1995)— EFARS

(a) For the purpose of initial evaluations of bids, the following will be utilized in the resolving arithmetic discrepancies found on the face of bidding schedule as submitted by the bidder:

(1) Obviously misplaced decimal points will be corrected;
(2) Discrepancy between unit price and extended price, the unit price will govern;
(3) Apparent errors in extension of unit prices will be corrected;
(4) Apparent errors in addition of lump-sum and extended prices will be corrected.

(b) For the purpose of bid evaluation, the government will proceed on the assumption that the bidder intends his bid to be evaluated on basis of the unit prices, the totals arrived at by resolution of arithmetic discrepancies as provided above and the bid will be so reflected on the abstract of bids.

(c) These correction procedures shall not be used to resolve any ambiguity concerning which bid is low.

(End of provision)

52.222-23 NOTICE OF REQUIREMENT FOR AFFIRMATIVE ACTION TO ENSURE EQUAL EMPLOYMENT OPPORTUNITY FOR CONSTRUCTION (FEB 1999)

(a) The offeror's attention is called to the Equal Opportunity clause and the Affirmative Action Compliance Requirements for Construction clause of this solicitation.

(b) The goals for minority and female participation, expressed in percentage terms for the Contractor's aggregate workforce in each trade on all construction work in the covered area, are as follows:

Goals for minority participation for each trade	Goals for female participation for each trade
12.3%	6.9%

These goals are applicable to all the Contractor's construction work performed in the covered area. If the Contractor performs construction work in a geographical area located outside of the covered area, the Contractor shall apply the goals established for the geographical area where the work is actually performed. Goals are published periodically in the Federal Register in notice form, and these notices may be obtained from any Office of Federal Contract Compliance Programs office.

(c) The Contractor's compliance with Executive Order 11246, as amended, and the regulations in 41 CFR 60-4 shall be based on (1) its implementation of the Equal Opportunity clause, (2) specific affirmative action obligations required by the clause entitled "Affirmative Action Compliance Requirements for Construction," and (3) its efforts to meet the goals. The hours of minority and female employment and training must be substantially uniform throughout the length of the contract, and in each trade. The Contractor shall make a good faith effort to employ minorities and women evenly on each of its projects. The transfer of minority or female employees or trainees from Contractor to Contractor, or from project to project, for the sole purpose of meeting the Contractor's goals shall be a violation of the contract, Executive Order 11246, as amended, and the regulations in 41 CFR 60-4. Compliance with the goals will be measured against the total work hours performed.

(d) The Contractor shall provide written notification to the Deputy Assistant Secretary for Federal Contract Compliance, U.S. Department of Labor, within 10 working days following award of any construction subcontract in excess of $10,000 at any tier for construction work under the contract resulting from this solicitation. The notification shall list the --

(1) Name, address, and telephone number of the subcontractor;

(2) Employer's identification number of the subcontractor;

(3) Estimated dollar amount of the subcontract;

(4) Estimated starting and completion dates of the subcontract; and

(5) Geographical area in which the subcontract is to be performed.

(e) As used in this Notice, and in any contract resulting from this solicitation, the "covered area" is SMSA 9160, Wilmington, Delaware, New Jersey, Maryland

52.216-1 TYPE OF CONTRACT (APR 1984)

The Government contemplates award of a firm fixed price contract resulting from this solicitation.

(End of clause)

52.233-2 SERVICE OF PROTEST (AUG 1996)

(a) Protests, as defined in section 33.101 of the Federal Acquisition Regulation, that are filed directly with an agency, and copies of any protests that are filed with the General Accounting Office (GAO), shall be served on the Contracting Officer (addressed as follows) by obtaining written and dated acknowledgment of receipt from
Ms. Denise DeTitta
U.S. Army Corps of Engineers
Wanamaker Building, Room 643
100 Penn Square East
Philadelphia, Pennsylvania 19107-3390

(b) The copy of any protest shall be received in the office designated above within one day of filinga protest with the GAO.

(End of provision)

252.236-7008 CONTRACT PRICES - BIDDING SCHEDULES. (DEC 1991)

(a) The Government's payment for the items listed in the Bidding Schedule shall constitute full compensation to the Contractor for --

(1) Furnishing all plant, labor, equipment, appliances, and materials; and

(2) Performing all operations required to complete the work in conformity with the drawings and specifications.

(b) The Contractor shall include in the prices for the items listed in the Bidding Schedule all costs for work in the specifications, whether or not specifically listed in the Bidding Schedule.

THIS PAGE HAS BEEN LEFT INTENTIONALLY BLANK

CLAUSES INCORPORATED BY FULL TEXT

52.203-2 CERTIFICATE OF INDEPENDENT PRICE DETERMINATION (APR 1985)

(a) The offeror certifies that --

(1) The prices in this offer have been arrived at independently, without, for the purpose of restricting competition, any consultation, communication, or agreement with any other offeror or competitor relating to (i) those prices, (ii) the intention to submit an offer, or (iii) the methods of factors used to calculate the prices offered:

(2) The prices in this offer have not been and will not be knowingly disclosed by the offeror, directly or indirectly, to any other offeror or competitor before bid opening (in the case of a sealed bid solicitation) or contract award (in the case of a negotiated solicitation) unless otherwise required by law; and

(3) No attempt has been made or will be made by the offeror to induce any other concern to submit or not to submit an offer for the purpose of restricting competition.

(b) Each signature on the offer is considered to be a certification by the signatory that the signatory --

(1) Is the person in the offeror's organization responsible for determining the prices offered in this bid or proposal, and that the signatory has not participated and will not participate in any action contradictory to subparagraphs (a)(1) through (a)(3) above; or

(2) (i) Has been authorized, in writing, to act as an agent for the following principals in certifying that those principals have not participated, and will not participate in any action contrary to subparagraphs (a)(1) through (a)(3) above _____ (insert full name of person(s) in the offeror's organization responsible for determining the prices offered in this bid or proposal, and the title of his or her position in the offeror's organization);

(ii) As an authorized agent, does certify that the principals named in subdivision (b)(2)(i) above have not participated, and will not participate, in any action contrary to subparagraphs (a)(1) through (a)(3) above; and

(iii) As an agent, has not personally participated, and will not participate, in any action contrary to subparagraphs (a)(1) through (a)(3) above.

(c) If the offeror deletes or modifies subparagraph (a)(2) above, the offeror must furnish with its offer a signed statement setting forth in detail the circumstances of the disclosure.

(End of clause)

52.203-11 CERTIFICATION AND DISCLOSURE REGARDING PAYMENTS TO INFLUENCE CERTAIN FEDERAL TRANSACTIONS (APR 1991)

(a) The definitions and prohibitions contained in the clause, at FAR 52.203-12, Limitation on Payments to Influence Certain Federal Transactions, included in this solicitation, are hereby incorporated by reference in paragraph (b) of this Certification.

(b) The offeror, by signing its offer, hereby certifies to the best of his or her knowledge and belief that on or after December 23, 1989,--

(1) No Federal appropriated funds have been paid or will be paid to any person for influencing or attempting to influence an officer or employee of any agency, a Member of Congress, an officer or employee of Congress, or an employee of a member of Congress on his or her behalf in connection with the awarding of any Federal contract, the making of any Federal grant, the making of any Federal loan, the entering into of any cooperative agreement, and the extension, continuation, renewal, amendment or modification of any Federal contract, grant, loan, or cooperative agreement;

(2) If any funds other than Federal appropriated funds (including profit or fee received under a covered Federal transaction) have been paid, or will be paid to any person for influencing or attempting to influence an officer or employee of any agency, a Member of Congress, an officer or employee of Congress or an employee of a Member of Congress on his or her behalf in connection with this solicitation, the offeror shall complete and submit, with its offer, OMB standard form LLL, Disclosure of Lobbying Activities, to the Contracting Officer; and

(3) He or she will include the language of this certification in all subcontract awards at any tier and require that all recipients of subcontract awards in excess of $100,000 shall certify and disclose accordingly.

(c) Submission of this certification and disclosure is a prerequisite for making or entering into this contract imposed by section 1352, title 31, United States Code. Any person who makes an expenditure prohibited under this provision, shall be subject to a civil penalty of not less than $10,000, and not more than $100,000, for each such failure.

(End of provision)

52.204-5 WOMEN-OWNED BUSINESS (OTHER THAN SMALL BUSINESS) (MAY 1999)

(a) Definition. Women-owned business concern, as used in this provision, means a concern that is at least 51 percent owned by one or more women; or in the case of any publicly owned business, at least 51 percent of its stock is owned by one or more women; and whose management and daily business operations are controlled by one or more women.

(b) Representation. [Complete only if the offeror is a women-owned business concern and has not represented itself as a small business concern in paragraph (b)(1) of FAR 52.219-1, Small Business Program Representations, of this solicitation.] The offeror represents that it ( ) is, ( ) is not a women-owned business concern.

(End of provision)

52.204-3 TAXPAYER IDENTIFICATION (OCT 1998)

(a) Definitions.

Common parent, as used in this provision, means that corporate entity that owns or controls an affiliated group of corporations that files its Federal income tax returns on a consolidated basis, and of which the offeror is a member.

Taxpayer Identification Number (TIN), as used in this provision, means the number required by the Internal Revenue Service (IRS) to be used by the offeror in reporting income tax and other returns. The TIN may be either a Social Security Number or an Employer Identification Number.

(b) All offerors must submit the information required in paragraphs (d) through (f) of this provision to comply with debt collection requirements of 31 U.S.C. 7701(c) and 3325(d), reporting requirements of 26 U.S.C. 6041, 6041A, and 6050M, and implementing regulations issued by the IRS. If the resulting contract is subject to the payment reporting requirements described in Federal Acquisition Regulation (FAR) 4.904,

the failure or refusal by the offeror to furnish the information may result in a 31 percent reduction of payments otherwise due under the contract.

(c) The TIN may be used by the Government to collect and report on any delinquent amounts arising out of the offeror's relationship with the Government (31 U.S.C. 7701(c)(3)). If the resulting contract is subject to the payment reporting requirements described in FAR 4.904, the TIN provided hereunder may be matched with IRS records to verify the accuracy of the offeror's TIN.

(d) Taxpayer Identification Number (TIN).

___ TIN:.----------

___ TIN has been applied for.

___ TIN is not required because:

___ Offeror is a nonresident alien, foreign corporation, or foreign partnership that does not have income effectively connected with the conduct of a trade or business in the United States and does not have an office or place of business or a fiscal paying agent in the United States;

___ Offeror is an agency or instrumentality of a foreign government;

___ Offeror is an agency or instrumentality of the Federal Government.

(e) Type of organization.

___ Sole proprietorship;

___ Partnership;

___ Corporate entity (not tax-exempt);

___ Corporate entity (tax-exempt);

___ Government entity (Federal, State, or local);

___ Foreign government;

___ International organization per 26 CFR 1.6049-4;

___ Other----------

(f) Common parent.

___ Offeror is not owned or controlled by a common parent as defined in paragraph (a) of this provision.

___ Name and TIN of common parent:

Name----------

TIN----------

(End of provision)

52.209-5 CERTIFICATION REGARDING DEBARMENT, SUSPENSION, PROPOSED DEBARMENT, AND OTHER RESPONSIBILITY MATTERS (MAR 1996)

(a)(1) The Offeror certifies, to the best of its knowledge and belief, that--

(i) The Offeror and/or any of its Principals--

(A) Are [ ] are not [ ] presently debarred, suspended, proposed for debarment, or declared ineligible for the award of contracts by any Federal agency;

(B) Have [ ] have not [ ], within a three-year period preceding this offer, been convicted of or had a civil judgment rendered against them for: commission of fraud or a criminal offense in connection with obtaining, attempting to obtain, or performing a public (Federal, state, or local) contract or subcontract; violation of Federal or state antitrust statutes relating to the submission of offers; or commission of embezzlement, theft, forgery, bribery, falsification or destruction of records, making false statements, tax evasion, or receiving stolen property; and

(C) Are [ ] are not [ ] presently indicted for, or otherwise criminally or civilly charged by a governmental entity with, commission of any of the offenses enumerated in subdivision (a)(1)(i)(B) of this provision.

(ii) The Offeror has [ ] has not [ ], within a three-year period preceding this offer, had one or more contracts terminated for default by any Federal agency.

(2) "Principals," for the purposes of this certification, means officers; directors; owners; partners; and, persons having primary management or supervisory responsibilities within a business entity (e.g., general manager; plant manager; head of a subsidiary, division, or business segment, and similar positions).

THIS CERTIFICATION CONCERNS A MATTER WITHIN THE JURISDICTION OF AN AGENCY OF THE UNITED STATES AND THE MAKING OF A FALSE, FICTITIOUS, OR FRAUDULENT CERTIFICATION MAY RENDER THE MAKER SUBJECT TO PROSECUTION UNDER SECTION 1001, TITLE 18, UNITED STATES CODE.

(b) The Offeror shall provide immediate written notice to the Contracting Officer if, at any time prior to contract award, the Offeror learns that its certification was erroneous when submitted or has become erroneous by reason of changed circumstances.

(c) A certification that any of the items in paragraph (a) of this provision exists will not necessarily result in withholding of an award under this solicitation. However, the certification will be considered in connection with a determination of the Offeror's responsibility. Failure of the Offeror to furnish a certification or provide such additional information as requested by the Contracting Officer may render the Offeror nonresponsible.

(d) Nothing contained in the foregoing shall be construed to require establishment of a system of records in order to render, in good faith, the certification required by paragraph (a) of this provision. The knowledge and information of an Offeror is not required to exceed that which is normally possessed by a prudent person in the ordinary course of business dealings.

(e) The certification in paragraph (a) of this provision is a material representation of fact upon which reliance was placed when making award. If it is later determined that the Offeror knowingly rendered an erroneous certification, in addition to other remedies available to the Government, the Contracting Officer may terminate the contract resulting from this solicitation for default.

(End of provision)

52.219-1 SMALL BUSINESS PROGRAM REPRESENTATIONS (MAY 1999) ALTERNATE I (OCT 1998) & ALTERNATE II (NOV 1999)

(a)(1) The standard industrial classification (SIC) code for this acquisition is [insert SIC code].

(2) The small business size standard is [insert size standard].

(3) The small business size standard for a concern which submits an offer in its own name, other than on a construction or service contract, but which proposes to furnish a product which it did not itself manufacture, is 500 employees.

(b) Representations. (1) The offeror represents as part of its offer that it ( ) is, ( ) is not a small business concern.

(2) (Complete only if the offeror represented itself as a small business concern in paragraph (b)(1) of this provision.) The offeror represents, for general statistical purposes, that it ( ) is, ( ) is not a small disadvantaged business concern as defined in 13 CFR 124-1002.

(3) (Complete only if the offeror represented itself as a small business concern in paragraph (b)(1) of this provision.) The offeror represents as part of its offer that it ( ) is, ( ) is not a women-owned small business concern.

(4) ([Complete only if offeror represented itself as a small business concern in paragraph (b)(1) of this provision.) The offeror represents, as part of its offer, that--

(i) It ____is, ____is not a HUBZone small business concern listed, on the date of this representation, on the List of Qualified HUBZone Small Business Concerns maintained by the Small Business Administration, and no material change in ownership and control, principal office, or HUBZone employee percentage has occurred since it was certified by the Small Business Administration in accordance with 13 CFR Part 126; and

(ii) It ____ is, ____ is not a joint venture that complies with the requirements of 13 CFR Part 126, and the representation in paragraph (b)(4)(i) of this provision is accurate for the HUBZone small business concern or concerns that are participating in the joint venture .([The offeror shall enter the name or names of the HUBZone small business concern or concerns that are participating in the joint venture: _____.) Each HUBZone small business concern participating in the joint venture shall submit a separate signed copy of the HUBZone representation.

(5) (Complete only if offeror represented itself as a small business concern in paragraph (b)(1) of this provision.) The offeror represents, as part of its offer, that--

(i) It ( ) is, ( ) is not a HUBZone small business concern listed, on the date of this representation, on the List of Qualified HUBZone Small Business Concerns maintained by the Small Business Administration, and no material change in ownership and control, principal place of ownership, or HUBZone employee percentage has occurred since it was certified by the Small Business Administration in accordance with 13 CFR part 126; and

(ii) It ( ) is, ( ) is not a joint venture that complies with the requirements of 13 CFR part 126, and the representation in paragraph (b)(5)(i) of this provision is accurate for the HUBZone small business concern or concerns that are participating in the joint venture. [The offeror shall enter the name or names of the HUBZone small business concern or concerns that are participating in the joint venture: _____.] Each HUBZone small business concern participating in the joint venture shall submit a separate signed copy of the HUBZone representation.

(c) Definitions. "Joint venture," for purposes of a small disadvantaged business (SDB) set-aside or price evaluation preference (as prescribed at 13 CFR 124.321), is a concern that is owned and controlled by one or more socially and economically disadvantaged individuals entering into a joint venture agreement with one or more business concerns and is considered to be affiliated for size purposes with such other concern(s). The combined annual receipts or employees of the concerns entering into the joint venture must meet the applicable size standard corresponding to the SIC code designated for the contract. The majority

of the venture's earnings must accrue directly to the socially and economically disadvantaged individuals in the SDB concern(s) in the joint venture. The percentage of the ownership involvement in a joint venture by disadvantaged individuals must be at least 51 percent.

"Small business concern," as used in this provision, means a concern, including its affiliates, that is independently owned and operated, not dominant in the field of operation in which it is bidding on Government contracts, and qualified as a small business under the criteria in 13 CFR Part 121 and the size standard in paragraph (a) of this provision.

"Small disadvantaged business concern," as used in this provision, means a small business concern that (1) is at least 51 percent unconditionally owned by one or more individuals who are both socially and economically disadvantaged, or a publicly owned business having at least 51 percent of its stock unconditionally owned by one or more socially and economically disadvantaged individuals, and (2) has its management and daily business controlled by one or more such individuals. This term also means a small business concern that is at least 51 percent unconditionally owned by an economically disadvantaged Indian tribe or Native Hawaiian Organization, or a publicly owned business having at least 51 percent of its stock unconditionally owned by one or more of these entities, which has its management and daily business controlled by members of an economically disadvantaged Indian tribe or Native Hawaiian Organization, and which meets the requirements of 13 CFR Part 124.

"Women-owned small business concern," as used in this provision, means a small business concern--

(1) Which is at least 51 percent owned by one or more women or, in the case of any publicly owned business, at least 51 percent of the stock of which is owned by one or more women; and

(2) Whose management and daily business operations are controlled by one or more women.

(d) Notice. (1) If this solicitation is for supplies and has been set aside, in whole or in part, for small business concerns, then the clause in this solicitation providing notice of the set-aside contains restrictions on the source of the end items to be furnished.

(2) Under 15 U.S.C. 645(d), any person who misrepresents a firm's status as a small, small disadvantaged, or women-owned small business concern in order to obtain a contract to be awarded under the preference programs established pursuant to section 8(a), 8(d), 9, or 15 of the Small Business Act or any other provision of Federal law that specifically references section 8(d) for a definition of program eligibility, shall--

(i) Be punished by imposition of fine, imprisonment, or both;

(ii) Be subject to administrative remedies, including suspension and debarment; and

(iii) Be ineligible for participation in programs conducted under the authority of the Act.

(End of provision)

52.219-2 EQUAL LOW BIDS. (OCT 1995)

(a) This provision applies to small business concerns only.

(b) The bidder's status as a labor surplus area (LSA) concern may affect entitlement to award in case of tie bids. If the bidder wishes to be considered for this priority, the bidder must identify, in the following space, the LSA in which the costs to be incurred on account of manufacturing or production (by the bidder or the first-tier subcontractors) amount to more than 50 percent of the contract price.

_

_____
_

(c) Failure to identify the labor surplus area as specified in paragraph (b) of this provision will preclude the bidder from receiving priority consideration. If the bidder is awarded a contract as a result of receiving priority consideration under this provision and would not have otherwise received award, the bidder shall perform the contract or cause the contract to be performed in accordance with the obligations of an LSA concern.

52.219-19 SMALL BUSINESS CONCERN REPRESENTATION FOR THE SMALL BUSINESS COMPETITIVENESS DEMONSTRATION PROGRAM (JAN 1997)

(a) Definition.

"Emerging small business" as used in this solicitation, means a small business concern whose size is no greater than 50 percent of the numerical size standard applicable to the standard industrial classification code assigned to a contracting opportunity.

(b) [Complete only if the Offeror has represented itself under the provision at 52.219-1 as a small business concern under the size standards of this solicitation.] The Offeror [ ] is, [ ] is not an emerging small business.

(c) (Complete only if the Offeror is a small business or an emerging small business, indicating its size range.)

Offeror's number of employees for the past 12 months (check this column if size standard stated in solicitation is expressed in terms of number of employees) or Offeror's average annual gross revenue for the last 3 fiscal years (check this column if size standard stated in solicitation is expressed in terms of annual receipts). (Check one of the following.)

No. of Employees	Avg. Annual Gross Revenues
____ 50 or fewer	____ $1 million or less
____ 51 - 100	____ $1,000,001 - $2 million
____ 101 - 250	____ $2,000,001 - $3.5 million
____ 251 - 500	____ $3,500,001 - $5 million
____ 501 - 750	____ $5,000,001 - $10 million
____ 751 - 1,000	____ $10,000,001 - $17 million
____ Over 1,000	____ Over $17 million

(End of provision)

52.219-21 SMALL BUSINESS SIZE REPRESENTATION FOR TARGETED INDUSTRY CATEGORIES UNDER THE SMALL BUSINESS COMPETITIVENESS DEMONSTRATION PROGRAM (MAY 1999)

(Complete only if the Offeror has represented itself under the provision at 52.219-1 as a small business concern under the size standards of this solicitation.)

Offeror's number of employees for the past 12 months (check this column if size standard stated in solicitation is expressed in terms of number of employees) or Offeror's average annual gross revenue for the last 3 fiscal years (check this column if size standard stated in solicitation is expressed in terms of annual receipts). (Check one of the following.)

No. of Employees	Avg. Annual Gross Revenues
____ 50 or fewer	____ $1 million or less
____ 51 - 100	____ $1,000,001 - $2 million
____ 101 - 250	____ $2,000,001 - $3.5 million
____ 251 - 500	____ $3,500,001 - $5 million
____ 501 - 750	____ $5,000,001 - $10 million
____ 751 - 1,000	____ $10,000,001 - $17 million
____ 17 million	

(End of provision)

52.222-22 PREVIOUS CONTRACTS AND COMPLIANCE REPORTS (FEB 1999)

The offeror represents that --

(a) [ ] It has, [ ] has not participated in a previous contract or subcontract subject to the Equal Opportunity clause of this solicitation;

(b) [ ] It has, [ ] has not, filed all required compliance reports; and

(c) Representations indicating submission of required compliance reports, signed by proposed subcontractors, will be obtained before subcontract awards.

(End of provision)

52.223-1 CLEAN AIR AND WATER CERTIFICATION (APR 1984)

The Offeror certifies that --

(a) Any facility to be used in the performance of this proposed contract [ ] is, [ ] is not listed on the Environmental Protection Agency List of Violating Facilities;

(b) The Offeror will immediately notify the Contracting Officer, before award, of the receipt of any communication from the Administrator, or a designee, of the Environmental Protection Agency, indicating that any facility that the Offeror proposes to use for the performance of the contract is under consideration to be listed on the EPA List of Violating Facilities; and

(c) The Offeror will include a certification substantially the same as this certification, including this paragraph (c), in every nonexempt subcontract.

(End of clause)

52.223-13 CERTIFICATION OF TOXIC CHEMICAL RELEASE REPORTING (OCT 1996)

(a) Submission of this certification is a prerequisite for making or entering into this contract imposed by Executive Order 12969, August 8, 1995.

(b) By signing this offer, the offeror certifies that--

(1) As the owner or operator of facilities that will be used in the performance of this contract that are subject to the filing and reporting requirements described in section 313 of the Emergency Planning and Community Right-to-Know Act of 1986 (EPCRA) (42 U.S.C. 11023) and section 6607 of the Pollution Prevention Act of 1990 (PPA) (42 U.S.C. 13106), the offeror will file and continue to file for such facilities for the life of the contract the Toxic Chemical Release Inventory Form (Form R) as described in sections 313(a) and (g) of EPCRA and section 6607 of PPA; or

(2) None of its owned or operated facilities to be used in the performance of this contract is subject to the Form R filing and reporting requirements because each such facility is exempt for at least one of the following reasons: (Check each block that is applicable.)

[ ] (i) The facility does not manufacture, process or otherwise use any toxic chemicals listed under section 313(c) of EPCRA, 42 U.S.C. 11023(c);

[ ] (ii) The facility does not have 10 or more full-time employees as specified in section 313.(b)(1)(A) of EPCRA 42 U.S.C. 11023(b)(1)(A);

[ ] (iii) The facility does not meet the reporting thresholds of toxic chemicals established under section 313(f) of EPCRA, 42 U.S.C. 11023(f) (including the alternate thresholds at 40 CFR 372.27, provided an appropriate certification form has been filed with EPA);

[ ] (iv) The facility does not fall within Standard Industrial Classification Code (SIC) designations 20 through 39 as set forth in FAR section 19.102 of the Federal Acquisition Regulation; or

[ ] (v) The facility is not located within any State of the United States, the District of Columbia, the Commonwealth of Puerto Rico, Guam, American Samoa, the United States Virgin Islands, the Northern Mariana Islands, or any other territory or possession over which the United States has jurisdiction.

252.247-7022 REPRESENTATION OF EXTENT OF TRANSPORTATION BY SEA (AUG 1992)

(a) The Offeror shall indicate by checking the appropriate blank in paragraph (b) of this provision whether transportation of supplies by sea is anticipated under the resultant contract. The term supplies is defined in the Transportation of Supplies by Sea clause of this solicitation.

(b) Representation. The Offeror represents that it:

(1) Does anticipate that supplies will be transported by sea in the performance of any contract or subcontract resulting from this solicitation.

(2) Does not anticipate that supplies will be transported by sea in the performance of any contract or subcontract resulting from this solicitation.

(c) Any contract resulting from this solicitation will include the Transportation of Supplies by Sea clause. If the Offeror represents that it will not use ocean transportation, the resulting contract will also include the Defense FAR Supplement clause at 252.247-7024, Notification of Transportation of Supplies by Sea.

(End of provision)

THIS PAGE HAS BEEN LEFT INTENTIONALLY BLANK

CLAUSES INCORPORATED BY FULL TEXT

52.202-1 DEFINITIONS (OCT 1995) --ALTERNATE I (APR 1984)

(a) "Head of the agency" (also called "agency head") or "Secretary" means the Secretary (or Attorney General, Administrator, Governor, Chairperson, or other chief official, as appropriate) of the agency, including any deputy or assistant chief official of the agency; and the term "authorized representative" means any person, persons, or board (other than the Contracting Officer) authorized to act for the head of the agency or Secretary.

(b) "Commercial component" means any component that is a commercial item.

(c) "Component" means any item supplied to the Federal Government as part of an end item or of another component.

(d) "Nondevelopmental item" means--

(1) Any previously developed item of supply used exclusively for governmental purposes by a Federal agency, a State or local government, or a foreign government with which the United States has a mutual defense cooperation agreement;

(2) Any item described in paragraph (e)(1) of this definition that requires only minor modification or modifications of a type customarily available in the commercial marketplace in order to meet the requirements of the procuring department or agency; or
(3) Any item of supply being produced that does not meet the requirements of paragraph (e)(1) or (e)(2) solely because the item is not yet in use.

(e) "Contracting Officer" means a person with the authority to enter into, administer, and/or terminate contracts and make related determinations and findings. The term includes certain authorized representatives of the Contracting Officer acting within the limits of their authority as delegated by the Contracting Officer.

(f) Except as otherwise provided in this contract, the term "subcontracts" includes, but is not limited to , purchase orders and changes and modifications to purchase orders under this contract.

52.203-3 GRATUITIES (APR 1984)

(a) The right of the Contractor to proceed may be terminated by written notice if, after notice and hearing, the agency head or a designee determines that the Contractor, its agent, or another representative--

(1) Offered or gave a gratuity (e.g., an entertainment or gift) to an officer, official, or employee of the Government; and

(2) Intended, by the gratuity, to obtain a contract or favorable treatment under a contract.

(b) The facts supporting this determination may be reviewed by any court having lawful jurisdiction.

(c) If this contract is terminated under paragraph (a) of this clause, the Government is entitled--

(1) To pursue the same remedies as in a breach of the contract; and

(2) In addition to any other damages provided by law, to exemplary damages of not less than 3 nor more than 10 times the cost incurred by the Contractor in giving gratuities to the person concerned, as determined by the agency head or a designee. (This subparagraph (c)(2) is applicable only if this contract uses money appropriated to the Department of Defense.)

(d) The rights and remedies of the Government provided in this clause shall not be exclusive and are in addition to any other rights and remedies provided by law or under this contract.

(End of clause)

52.203-5 COVENANT AGAINST CONTINGENT FEES (APR 1984)

(a) The Contractor warrants that no person or agency has been employed or retained to solicit or obtain this contract upon an agreement or understanding for a contingent fee, except a bona fide employee or agency. For breach or violation of this warranty, the Government shall have the right to annul this contract without liability or, in its discretion, to deduct from the contract price or consideration, or otherwise recover, the full amount of the contingent fee.

(b) "Bona fide agency," as used in this clause, means an established commercial or selling agency, maintained by a contractor for the purpose of securing business, that neither exerts nor proposes to exert improper influence to solicit or obtain Government contracts nor holds itself out as being able to obtain any Government contract or contracts through improper influence.

"Bona fide employee," as used in this clause, means a person, employed by a contractor and subject to the contractor's supervision and control as to time, place, and manner of performance, who neither exerts nor proposes to exert improper influence to solicit or obtain Government contracts nor holds out as being able to obtain any Government contract or contracts through improper influence.

"Contingent fee," as used in this clause, means any commission, percentage, brokerage, or other fee that is contingent upon the success that a person or concern has in securing a Government contract.

"Improper influence," as used in this clause, means any influence that induces or tends to induce a Government employee or officer to give consideration or to act regarding a Government contract on any basis other than the merits of the matter.

(End of clause)

52.203-6 RESTRICTIONS ON SUBCONTRACTOR SALES TO THE GOVERNMENT (JUL 1995)

(a) Except as provided in (b) of this clause, the Contractor shall not enter into any agreement with an actual or prospective subcontractor, nor otherwise act in any manner, which has or may have the effect of restricting sales by such subcontractors directly to the Government of any item or process (including computer software) made or furnished by the subcontractor under this contract or under any follow-on production contract.

(b) The prohibition in (a) of this clause does not preclude the Contractor from asserting rights that are otherwise authorized by law or regulation.

(c) The Contractor agrees to incorporate the substance of this clause, including this paragraph (c), in all subcontracts under this contract which exceed $100,000.

52.203-7 ANTI-KICKBACK PROCEDURES. (JUL 1995)

(a) Definitions.

"Kickback," as used in this clause, means any money, fee, commission, credit, gift, gratuity, thing of value, or compensation of any kind which is provided, directly or indirectly, to any prime Contractor, prime Contractor employee, subcontractor, or subcontractor employee for the purpose of improperly obtaining or rewarding favorable treatment in connection with a prime contract or in connection with a subcontract relating to a prime contract.

"Person," as used in this clause, means a corporation, partnership, business association of any kind, trust, joint-stock company, or individual.

"Prime contract," as used in this clause, means a contract or contractual action entered into by the United States for the purpose of obtaining supplies, materials, equipment, or services of any kind.

"Prime Contractor," as used in this clause, means a person who has entered into a prime contract with the United States.

"Prime Contractor employee," as used in this clause, means any officer, partner, employee, or agent of a prime Contractor.

"Subcontract," as used in this clause, means a contract or contractual action entered into by a prime Contractor or subcontractor for the purpose of obtaining supplies, materials, equipment, or services of any kind under a prime contract.

"Subcontractor," as used in this clause, (1) means any person, other than the prime Contractor, who offers to furnish or furnishes any supplies, materials, equipment, or services of any kind under a prime contract or a subcontract entered into in connection with such prime contract, and (2) includes any person who offers to furnish or furnishes general supplies to the prime Contractor or a higher tier subcontractor.

"Subcontractor employee," as used in this clause, means any officer, partner, employee, or agent of a subcontractor.

(b) The Anti-Kickback Act of 1986 (41 U.S.C. 51-58) (the Act), prohibits any person from -

(1) Providing or attempting to provide or offering to provide any kickback;

(2) Soliciting, accepting, or attempting to accept any kickback; or

(3) Including, directly or indirectly, the amount of any kickback in the contract price charged by a prime Contractor to the United States or in the contract price charged by a subcontractor to a prime Contractor or higher tier subcontractor.

(c)(1) The Contractor shall have in place and follow reasonable procedures designed to prevent and detect possible violations described in paragraph (b) of this clause in its own operations and direct business relationships.

(2) When the Contractor has reasonable grounds to believe that a violation described in paragraph (b) of this clause may have occurred, the Contractor shall promptly report in writing the possible violation. Such reports shall be made to the inspector general of the contracting agency, the head of the contracting agency if the agency does not have an inspector general, or the Department of Justice.

(3) The Contractor shall cooperate fully with any Federal agency investigating a possible violation described in paragraph (b) of this clause.

(4) The Contracting Officer may (i) offset the amount of the kickback against any monies owed by the United States under the prime contract and/or (ii) direct that the Prime Contractor withhold, from sums owed a subcontractor under the prime contract, the amount of any kickback. The Contracting Officer may order the monies withheld under subdivision (c)(4)(ii) of this clause be paid over to the Government unless the Government has already offset those monies under subdivision (c)(4)(i) of this clause. In either case, the Prime Contractor shall notify the Contracting Officer when the monies are withheld.

(5) The Contractor agrees to incorporate the substance of this clause, including this subparagraph (c)(5) but excepting subparagraph (c)(1), in all subcontracts under this contract which exceed $100,000.

52.203-8 CANCELLATION, RESCISSION, AND RECOVERY OF FUNDS FOR ILLEGAL OR IMPROPER ACTIVITY (JAN 1997)

(a) If the Government receives information that a contractor or a person has engaged in conduct constituting a violation of subsection (a), (b), (c), or (d) of Section 27 of the Office of Federal Procurement Policy Act (41 U.S.C. 423) (the Act), as amended by section 4304 of the 1996 National Defense Authorization Act for Fiscal Year 1996 (Pub. L. 104-106), the Government may--

(1) Cancel the solicitation, if the contract has not yet been awarded or issued; or

(2) Rescind the contract with respect to which--

(i) The Contractor or someone acting for the Contractor has been convicted for an offense where the conduct constitutes a violation of subsection 27 (a) or (b) of the Act for the purpose of either--

(A) Exchanging the information covered by such subsections for anything of value; or

(B) Obtaining or giving anyone a competitive advantage in the award of a Federal agency procurement contract; or

(ii) The head of the contracting activity has determined, based upon a preponderance of the evidence, that the Contractor or someone acting for the Contractor has engaged in conduct constituting an offense punishable under subsections 27(e)(1) of the Act.

(b) If the Government rescinds the contract under paragraph (a) of this clause, the Government is entitled to recover, in addition to any penalty prescribed by law, the amount expended under the contract.

(c) The rights and remedies of the Government specified herein are not exclusive, and are in addition to any other rights and remedies provided by law, regulation, or under this contract.

52.203-10 PRICE OR FEE ADJUSTMENT FOR ILLEGAL OR IMPROPER ACTIVITY (JAN 1997)

(a) The Government, at its election, may reduce the price of a fixed-price type contract and the total cost and fee under a cost-type contract by the amount of profit or fee determined as set forth in paragraph (b) of this clause if the head of the contracting activity or designee determines that there was a violation of subsection 27 (a), (b), or (c) of the Office of Federal Procurement Policy Act, as amended (41 U.S.C. 423), as implemented in section 3.104 of the Federal Acquisition Regulation.

(b) The price or fee reduction referred to in paragraph (a) of this clause shall be--

(1) For cost-plus-fixed-fee contracts, the amount of the fee specified in the contract at the time of award;

(2) For cost-plus-incentive-fee contracts, the target fee specified in the contract at the time of award, notwithstanding any minimum fee or "fee floor" specified in the contract;

(3) For cost-plus-award-fee contracts--

(i) The base fee established in the contract at the time of contract award;

(ii) If no base fee is specified in the contract, 30 percent of the amount of each award fee otherwise payable to the Contractor for each award fee evaluation period or at each award fee determination point.

(4) For fixed-price-incentive contracts, the Government may--

(i) Reduce the contract target price and contract target profit both by an amount equal to the initial target profit specified in the contract at the time of contract award; or

(ii) If an immediate adjustment to the contract target price and contract target profit would have a significant adverse impact on the incentive price revision relationship under the contract, or adversely affect the contract financing provisions, the Contracting Officer may defer such adjustment until establishment of the total final price of the contract. The total final price established in accordance with the incentive price revision provisions of the contract shall be reduced by an amount equal to the initial target profit specified in the contract at the time of contract award and such reduced price shall be the total final contract price.

(5) For firm-fixed-price contracts, by 10 percent of the initial contract price or a profit amount determined by the Contracting Officer from records or documents in existence prior to the date of the contract award.

(c) The Government may, at its election, reduce a prime contractor's price or fee in accordance with the procedures of paragraph (b) of this clause for violations of the Act by its subcontractors by an amount not to exceed the amount of profit or fee reflected in the subcontract at the time the subcontract was first definitively priced.

(d) In addition to the remedies in paragraphs (a) and (c) of this clause, the Government may terminate this contract for default. The rights and remedies of the Government specified herein are not exclusive, and are in addition to any other rights and remedies provided by law or under this contract.

(End of clause)

52.203-12 LIMITATION ON PAYMENTS TO INFLUENCE CERTAIN FEDERAL TRANSACTIONS (JUN 1997)

(a) Definitions.

"Agency," as used in this clause, means executive agency as defined in 2.101.

"Covered Federal action," as used in this clause, means any of the following Federal actions:

(1) The awarding of any Federal contract.

(2) The making of any Federal grant.

(3) The making of any Federal loan.

(4) The entering into of any cooperative agreement.

(5) The extension, continuation, renewal, amendment, or modification of any Federal contract, grant, loan, or cooperative agreement.

"Indian tribe" and "tribal organization," as used in this clause, have the meaning provided in section 4 of the Indian Self-Determination and Education Assistance Act (25 U.S.C. 450B) and include Alaskan Natives.

"Influencing or attempting to influence," as used in this clause, means making, with the intent to influence, any communication to or appearance before an officer or employee of any agency, a Member of Congress, an officer or employee of Congress, or an employee of a Member of Congress in connection with any covered Federal action.

"Local government," as used in this clause, means a unit of government in a State and, if chartered, established, or otherwise recognized by a State for the performance of a governmental duty, including a local public authority, a special district, an intrastate district, a council of governments, a sponsor group representative organization, and any other instrumentality of a local government.

"Officer or employee of an agency," as used in this clause, includes the following individuals who are employed by an agency:

(1) An individual who is appointed to a position in the Government under title 5, United States Code, including a position under a temporary appointment.

(2) A member of the uniformed services, as defined in subsection 101(3), title 37, United States Code.

(3) A special Government employee, as defined in section 202, title 18, United States Code.

(4) An individual who is a member of a Federal advisory committee, as defined by the Federal Advisory Committee Act, title 5, United States Code, appendix 2.

"Person," as used in this clause, means an individual, corporation, company, association, authority, firm, partnership, society, State, and local government, regardless of whether such entity is operated for profit, or not for profit. This term excludes an Indian tribe, tribal organization, or any other Indian organization with respect to expenditures specifically permitted by other Federal law.

"Reasonable compensation," as used in this clause, means, with respect to a regularly employed officer or employee of any person, compensation that is consistent with the normal compensation for such officer or employee for work that is not furnished to, not funded by, or not furnished in cooperation with the Federal Government.

"Reasonable payment," as used in this clause, means, with respect to professional and other technical services, a payment in an amount that is consistent with the amount normally paid for such services in the private sector.

"Recipient," as used in this clause, includes the Contractor and all subcontractors. This term excludes an Indian tribe, tribal organization, or any other Indian organization with respect to expenditures specifically permitted by other Federal law.

"Regularly employed," as used in this clause, means, with respect to an officer or employee of a person requesting or receiving a Federal contract, an officer or employee who is employed by such person for at least 130 working days within 1 year immediately preceding the date of the submission that initiates agency consideration of such person for receipt of such contract. An officer or employee who is employed by such person for less than 130 working days within 1 year immediately preceding the date of the submission that initiates agency consideration of such person shall be considered to be regularly employed as soon as he or she is employed by such person for 130 working days.

"State," as used in this clause, means a State of the United States, the District of Columbia, the Commonwealth of Puerto Rico, a territory or possession of the United States, an agency or instrumentality of a State, and multi-State, regional, or interstate entity having governmental duties and powers.

(b) Prohibitions.

(1) Section 1352 of title 31, United States Code, among other things, prohibits a recipient of a Federal contract, grant, loan, or cooperative agreement from using appropriated funds to pay any person for influencing or attempting to influence an officer or employee of any agency, a Member of Congress, an officer or employee of Congress, or an employee of a Member of Congress in connection with any of the following covered Federal actions: the awarding of any Federal contract; the making of any Federal grant; the making of any Federal loan; the entering into of any cooperative agreement; or the modification of any Federal contract, grant, loan, or cooperative agreement.

(2) The Act also requires Contractors to furnish a disclosure if any funds other than Federal appropriated funds (including profit or fee received under a covered Federal transaction) have been paid, or will be paid, to any person for influencing or attempting to influence an officer or employee of any agency, a Member of Congress, an officer or employee of Congress, or an employee of a Member of Congress in connection with a Federal contract, grant, loan, or cooperative agreement.

(3) The prohibitions of the Act do not apply under the following conditions:

(i) Agency and legislative liaison by own employees.

(A) The prohibition on the use of appropriated funds, in subparagraph (b)(1) of this clause, does not apply in the case of a payment of reasonable compensation made to an officer or employee of a person requesting or receiving a covered Federal action if the payment is for agency and legislative liaison activities not directly related to a covered Federal action.

(B) For purposes of subdivision (b)(3)(i)(A) of this clause, providing any information specifically requested by an agency or Congress is permitted at any time.

(C) The following agency and legislative liaison activities are permitted at any time where they are not related to a specific solicitation for any covered Federal action:

(1) Discussing with an agency the qualities and characteristics (including individual demonstrations) of the person's products or services, conditions or terms of sale, and service capabilities.

(2) Technical discussions and other activities regarding the application or adaptation of theperson's products or services for an agency's use.

(D) The following agency and legislative liaison activities are permitted where they are prior to formal solicitation of any covered Federal action--

(1) Providing any information not specifically requested but necessary for an agency to make an informed decision about initiation of a covered Federal action;

(2) Technical discussions regarding the preparation of an unsolicited proposal prior to its official submission; and

(3) Capability presentations by persons seeking awards from an agency pursuant to the provisions of the Small Business Act, as amended by Pub. L. 95-507, and subsequent amendments.

(E) Only those services expressly authorized by subdivision (b)(3)(i)(A) of this clause are permitted under this clause.

(ii) Professional and technical services.

(A) The prohibition on the use of appropriated funds, in subparagraph (b)(1) of this clause, does not apply in the case of--

(1) A payment of reasonable compensation made to an officer or employee of a person requesting or receiving a covered Federal action or an extension, continuation, renewal, amendment, or modification of a covered Federal action, if payment is for professional or technical services rendered directly in the preparation, submission, or negotiation of any bid, proposal, or application for that Federal action or for meeting requirements imposed by or pursuant to law as a condition for receiving that Federal action.

(2) Any reasonable payment to a person, other than an officer or employee of a person requesting or receiving a covered Federal action or an extension, continuation, renewal, amendment, or modification of a covered Federal action if the payment is for professional or technical services rendered directly in the preparation, submission, or negotiation of any bid, proposal, or application for that Federal action or for meeting requirements imposed by or pursuant to law as a condition for receiving that Federal action. Persons other than officers or employees of a person requesting or receiving a covered Federal action include consultants and trade associations.

(B) For purposes of subdivision (b)(3)(ii)(A) of this clause, "professional and technical services" shall be limited to advice and analysis directly applying any professional or technical discipline. For example, drafting of a legal document accompanying a bid or proposal by a lawyer is allowable. Similarly, technical advice provided by an engineer on the performance or operational capability of a piece of equipment rendered directly in the negotiation of a contract is allowable. However, communications with the intent to influence made by a professional (such as a licensed lawyer) or a technical person (such as a licensed accountant) are not allowable under this section unless they provide advice and analysis directly applying their professional or technical expertise and unless the advice or analysis is rendered directly and solely in the preparation, submission or negotiation of a covered Federal action. Thus, for example, communications with the intent to influence made by a lawyer that do not provide legal advice or analysis directly and solely related to the legal aspects of his or her client's proposal, but generally advocate one proposal over another are not allowable under this section because the lawyer is not providing professional legal services. Similarly, communications with the intent to influence made by an engineer providing an engineering analysis prior to the preparation or submission of a bid or proposal are not allowable under this section since the engineer is providing technical services but not directly in the preparation, submission or negotiation of a covered Federal action.

(C) Requirements imposed by or pursuant to law as a condition for receiving a covered Federal award include those required by law or regulation and any other requirements in the actual award documents.

(D) Only those services expressly authorized by subdivisions (b)(3)(ii)(A)(1) and (2) of this clause are permitted under this clause.

(E) The reporting requirements of FAR 3.803(a) shall not apply with respect to payments of reasonable compensation made to regularly employed officers or employees of a person.

(c) Disclosure.

(1) The Contractor who requests or receives from an agency a Federal contract shall file with that agency a disclosure form, OMB standard form LLL, Disclosure of Lobbying Activities, if such person has made or has agreed to make any payment using nonappropriated funds (to include profits from any covered Federal action), which would be prohibited under subparagraph (b)(1) of this clause, if paid for with appropriated funds.

(2) The Contractor shall file a disclosure form at the end of each calendar quarter in which there occurs any event that materially affects the accuracy of the information contained in any disclosure form previously

filed by such person under subparagraph (c)(1) of this clause. An event that materially affects the accuracy of the information reported includes--

(i) A cumulative increase of $25,000 or more in the amount paid or expected to be paid for influencing or attempting to influence a covered Federal action; or

(ii) A change in the person(s) or individual(s) influencing or attempting to influence a covered Federal action; or

(iii) A change in the officer(s), employee(s), or Member(s) contacted to influence or attempt to influence a covered Federal action.

(3) The Contractor shall require the submittal of a certification, and if required, a disclosure form by any person who requests or receives any subcontract exceeding $100,000 under the Federal contract.

(4) All subcontractor disclosure forms (but not certifications) shall be forwarded from tier to tier until received by the prime Contractor. The prime Contractor shall submit all disclosures to the Contracting Officer at the end of the calendar quarter in which the disclosure form is submitted by the subcontractor. Each subcontractor certification shall be retained in the subcontract file of the awarding Contractor.

(d) Agreement. The Contractor agrees not to make any payment prohibited by this clause.

(e) Penalties.

(1) Any person who makes an expenditure prohibited under paragraph (a) of this clause or who fails to file or amend the disclosure form to be filed or amended by paragraph (b) of this clause shall be subject to civil penalties as provided for by 31 U.S.C. 1352. An imposition of a civil penalty does not prevent the Government from seeking any other remedy that may be applicable.

(2) Contractors may rely without liability on the representation made by their subcontractors in the certification and disclosure form.

(f) Cost allowability. Nothing in this clause makes allowable or reasonable any costs which would otherwise be unallowable or unreasonable. Conversely, costs made specifically unallowable by the requirements in this clause will not be made allowable under any other provision.

(End of clause)

52.204-4 PRINTING/COPYING DOUBLE-SIDED ON RECYCLED PAPER (JUN 1996)

(a) In accordance with Executive Order 12873, dated October 20, 1993, as amended by Executive Order 12995, dated March 25, 1996, the Offeror/Contractor is encouraged to submit paper documents, such as offers, letters, or reports, that are printed/copied double-sided on recycled paper that has at least 20 percent postconsumer material.

(b) The 20 percent standard applies to high-speed copier paper, offset paper, forms bond, computer printout paper, carbonless paper, file folders, white woven envelopes, and other uncoated printed and writing paper, such as writing and office paper, book paper, cotton fiber paper, and cover stock. An alternative to meeting the 20 percent postconsumer material standard is 50 percent recovered material content of certain industrial by-products.

52.209-6 PROTECTING THE GOVERNMENT'S INTEREST WHEN SUBCONTRACTING WITH CONTRACTORS DEBARRED, SUSPENDED, OR PROPOSED FOR DEBARMENT (JUL 1995)

(a) The Government suspends or debars Contractors to protect the Government's interests. The Contractor shall not enter into any subcontract in excess of the $25,000 with a Contractor that is debarred, suspended, or proposed for debarment unless there is a compelling reason to do so.

(b) The Contractor shall require each proposed first-tier subcontractor, whose subcontract will exceed $25,000, to disclose to the Contractor, in writing, whether as of the time of award of the subcontract, the subcontractor, or its principles, is or is not debarred, suspended, or proposed for debarment by the Federal Government.

(c) A corporate officer or a designee of the Contractor shall notify the Contracting Officer, in writing, before entering into a subcontract with a party that is debarred, suspended, or proposed for debarment (see FAR 9.404 for information on the List of Parties Excluded from Federal Procurement and Nonprocurement Programs). The notice must include the following:

(1) The name of the subcontractor.

(2) The Contractor's knowledge of the reasons for the subcontractor being on the List of Parties Excluded from Federal Procurement and Nonprocurement Programs.

(3) The compelling reason(s) for doing business with the subcontractor notwithstanding its inclusion on the List of Parties Excluded from Federal Procurement and Nonprocurement Programs.

(4) The systems and procedures the Contractor has established to ensure that it is fully protecting the Government's interests when dealing with such subcontractor in view of the specific basis for the party's debarment, suspension, or proposed debarment.

52.211-13 TIME EXTENSIONS (APR 1984)

Notwithstanding any other provisions of this contract, it is mutually understood that the time extensions for changes in the work will depend upon the extent, if any, by which the changes cause delay in the completion of the various elements of construction. The change order granting the time extension may provide that the contract completion date will be extended only for those specific elements so delayed and that the remaining contract completion dates for all other portions of the work will not be altered and may further provide for an equitable readjustment of liquidated damages under the new completion schedule.

52.211-18 VARIATION IN ESTIMATED QUANTITY (APR 1984)

If the quantity of a unit-priced item in this contract is an estimated quantity and the actual quantity of the unit-priced item varies more than 15 percent above or below the estimated quantity, an equitable adjustment in the contract price shall be made upon demand of either party. The equitable adjustment shall be based upon any increase or decrease in costs due solely to the variation above 115 percent or below 85 percent of the estimated quantity. If the quantity variation is such as to cause an increase in the time necessary for completion, the Contractor may request, in writing, an extension of time, to be received by the Contracting Officer within 10 days from the beginning of the delay, or within such further period as may be granted by the Contracting Officer before the date of final settlement of the contract. Upon the receipt of a written request for an extension, the Contracting Officer shall ascertain the facts and make an adjustment for extending the completion date as, in the judgement of the Contracting Officer, is justified.

52.214-26 AUDIT AND RECORDS--SEALED BIDDING (OCT 1997)

(a) As used in this clause, records includes books, documents, accounting procedures and practices, and other data, regardless of type and regardless of whether such items are in written form, in the form of computer data, or in any other form.

(b) Cost or pricing data. If the Contractor has been required to submit cost or pricing data in connection with the pricing of any modification to this contract, the Contracting Officer, or an authorized representative of the Contracting Officer, in order to evaluate the accuracy, completeness, and currency of the cost or pricing data, shall have the right to examine and audit all of the Contractor's records, including computations and projections, related to--

(1) The proposal for the modification;

(2) The discussions conducted on the proposal(s), including those related to negotiating;

(3) Pricing of the modification; or

(4) Performance of the modification.

(c) Comptroller General. In the case of pricing any modification, the Comptroller General of the United States, or an authorized representative, shall have the same rights as specified in paragraph (b) of this clause.

(d) Availability. The Contractor shall make available at its office at all reasonable times the materials described in reproduction, until 3 years after final payment under this contract, or for any other period specified in Subpart 4.7 of the Federal Acquisition Regulation (FAR). FAR Subpart 4.7, Contractor Records Retention, in effect on the data of this contract, is incorporated by reference in its entirety and made a part of this contract.

(1) If this contract is completely or partially terminated, the records relating to the work terminated shall be made available for 3 years after any resulting final termination settlement.

(2) Records pertaining to appeals under the Disputes clause or to litigation or the settlement of claims arising under or relating to the performance of this contract shall be made available until disposition of such appeals, litigation, or claims.

(e) The Contractor shall insert a clause containing all the provisions of this clause, including this paragraph (e), in all subcontracts expected to exceed the threshold in FAR 15.403-4(a)(1) for submission of cost or pricing data.

52.214-27 PRICE REDUCTION FOR DEFECTIVE COST OR PRICING DATA - MODIFICATIONS - SEALED BIDDING. (OCT 1997)

(a) This clause shall become operative only for any modification to this contract involving aggregate increases and/or decreases in costs, plus applicable profits, expected to exceed the threshold for the submission of cost or pricing data at FAR 15.403-4(a)(1), except that this clause does not apply to a modification if an exception under FAR 15.403-1(b) applies.

(1) Based on adequate price competition;

(2) Based on established catalog or market prices of commercial items sold in substantial quantities to the general public; or

(3) Set by law or regulation.

(b) If any price, including profit, negotiated in connection with any modification under this clause, was increased by any significant amount because

(1) the Contractor or a subcontractor furnished cost or pricing data that were not complete, accurate, and current as certified in its Certificate of Current Cost or Pricing Data;

(2) a subcontractor or prospective subcontractor furnished the Contractor cost or pricing data that were not complete, accurate, and current as certified in the Contractor's Certificate of Current Cost or Pricing Data; or

(3) any of these parties furnished data of any description that were not accurate, the price shall be reduced accordingly and the contract shall be modified to reflect the reduction. This right to a price reduction is limited to that resulting from defects in data relating to modifications for which this clause becomes operative under paragraph (a) above.

(c) Any reduction in the contract price under paragraph (b) above due to defective data from a prospective subcontractor that was not subsequently awarded the subcontract shall be limited to the amount, plus applicable overhead and profit markup, by which:

(1) the actual subcontract; or

(2) the actual cost to the Contractor, if there was no subcontract, was less than the prospective subcontract cost estimate submitted by the Contractor; provided, that the actual subcontract price was not itself affected by defective cost or pricing data.

(d) If the Contracting Officer determines under paragraph (b) of this clause that a price or cost reduction should be made:

(1) the Contractor agrees not to raise the following matters as a defense:

(i) The Contractor or subcontractor was a sole source supplier or otherwise was in a superior bargaining position and thus the price of the contract would not have been modified even if accurate, complete, and current cost or pricing data had been submitted;

(ii) The Contracting Officer should have known that the cost or pricing data in issue were defective even though the Contractor or subcontractor took no affirmative action to bring the character of the data to the attention of the Contracting Officer;

(iii) The contract was based on an agreement about the total cost of the contract and there was no agreement about the cost of each item procured under the contract; or

(iv) The Contractor or subcontractor did not submit a Certificate of Current Cost or Pricing Data.

(2) Except as prohibited by subdivision (d)(2)(ii) of this clause:

(i) an offset in an amount determined appropriate by the Contracting Officer based upon the facts shall be allowed against the amount of a contract price reduction if:

(A) The Contractor certifies to the Contracting Officer that, to the best of the Contractor's knowledge and belief, the Contractor is entitled to the offset in the amount requested; and

(B) The Contractor proves that the cost or pricing data were available before the date of agreement on the price of the contract (or price of the modification) and that the data were not submitted before such date.

(ii) An offset shall not be allowed if:

(A) The understated data was known by the Contractor to be understated when the Certificate of Current Cost or Pricing Data was signed; or (B) The Government proves that the facts demonstrate that the contract price would not have increased in the amount to be offset even if the available data had been submitted before the date of agreement on price.

(e) If any reduction in the contract price under this clause reduces the price of items for which payment was made prior to the date of the modification reflecting the price reduction, the Contractor shall be liable to and shall pay the United States at the time such overpayment is repaid:

(1) Simple interest on the amount of such overpayment to be computed from the date(s) of overpayment to the Contractor to the date the Government is repaid by the Contractor at the applicable underpayment rate effective for each quarter prescribed by the Secretary of the Treasury under 26 U.S.C. 6621(a)(2); and

(2) A penalty equal to the amount of the overpayment, if the Contractor or subcontractor knowingly submitted cost or pricing data which were incomplete, inaccurate, or noncurrent.

52.214-28 SUBCONTRACTOR COST OR PRICING DATA - MODIFICATIONS - SEALED BIDDING. (OCT 1997)

(a) The requirements of paragraphs (b) and (c) of this clause shall:

(1) become operative only for any modification to this contract involving aggregate increases and/or decreases in costs, plus applicable profits, expected to exceed the threshold for submission of cost or pricing data at (FAR) 48 CFR 15.403-4(a)(1); and

(2) be limited to such modifications.

(b) Before awarding any subcontract expected to exceed the threshold for submission of cost or pricing data at FAR 15.403-4(a)(1), on the date of agreement on price or the date of award, whichever is later; or before pricing any subcontract modifications involving aggregate increases and/or decreases in costs, plus applicable profits, expected to exceed the threshold for submission of cost or pricing data at FAR 15.403-4(a)(1), the Contractor shall require the subcontractor to submit cost or pricing data (actually or by specific identification in writing), unless an exception under FAR 15.403-1(b) applies.

(1) Based on adequate price competition;

(2) Based on established catalog or market prices of commercial items sold in substantial quantities to the general public; or

(3) Set by law or regulation.

(c) The Contractor shall require the subcontractor to certify in substantially the form prescribed in subsection 15.406-2 of the Federal Acquisition Regulation that, to the best of its knowledge and belief, the data submitted under paragraph (b) above were accurate, complete, and current as of the date of agreement on the negotiated price of the subcontract or subcontract modification.

(d) The Contractor shall insert the substance of this clause, including this paragraph (d), in each subcontract that, when entered into, exceeds the threshold for submission of cost or pricing data at FAR 15.403-4(a)(1).

52.219-4 NOTICE OF PRICE EVALUATION PREFERENCE FOR HUBZONE SMALL BUSINESS CONCERNS (JAN 1999)

(a) Definition. HUBZone small business concern, as used in this clause, means a small business concern that appears on the List of Qualified HUBZone Small Business Concerns maintained by the Small Business Administration.

(b) Evaluation preference. (1) Offers will be evaluated by adding a factor of 10 percent to the price of all offers, except--

(i) Offers from HUBZone small business concerns that have not waived the evaluation preference;

(ii) Otherwise successful offers from small business concerns;

(iii) Otherwise successful offers of eligible products under the Trade Agreements Act when the dollar threshold for application of the Act is exceeded (see 25.402 of the Federal Acquisition Regulation (FAR)); and

(iv) Otherwise successful offers where application of the factor would be inconsistent with a Memorandum of Understanding or other international agreement with a foreign government.

(2) The factor of 10 percent shall be applied on a line item basis or to any group of items on which award may be made. Other evaluation factors described in the solicitation shall be applied before application of the factor.

(3) A concern that is both a HUBZone small business concern and a small disadvantaged business concern will receive the benefit of both the HUBZone small business price evaluation preference and the small disadvantaged business price evaluation adjustment (see FAR clause 52.219-23). Each applicable price evaluation preference or adjustment shall be calculated independently against an offeror's base offer.

These individual preference amounts shall be added together to arrive at the total evaluated price for that offer.

(c) Waiver of evaluation preference. A HUBZone small business concern may elect to waive the evaluation preference, in which case the factor will be added to its offer for evaluation purposes. The agreements in paragraph (d) of this clause do not apply if the offeror has waived the evaluation preference.

{time} Offeror elects to waive the evaluation preference.

(d) Agreement. A HUBZone small business concern agrees that in the performance of the contract, in the case of a contract for

(1) Services (except construction), at least 50 percent of the cost of personnel for contract performance will be spent for employees of the concern or employees of other HUBZone small business concerns;

(2) Supplies (other than procurement from a nonmanufacturer of such supplies), at least 50 percent of the cost of manufacturing, excluding the cost of materials, will be performed by the concern or other HUBZone small business concerns;

(3) General construction, at least 15 percent of the cost of the contract performance incurred for personnel will be will be spent on the concern's employees or the employees of other HUBZone small business concerns; or

(4) Construction by special trade contractors, at least 25 percent of the cost of the contract performance incurred for personnel will be spent on the concern's employees or the employees of other HUBZone small business concerns.

(e) A HUBZone joint venture agrees that in the performance of the contract, the applicable percentage specified in paragraph (d) of this clause will be performed by the HUBZone small business participant or participants.

(f) A HUBZone small business concern nonmanufacturer agrees to furnish in performing this contract only end items manufactured or produced by HUBZone small business manufacturer concerns. This paragraph does not apply in connection with construction or service contracts.

(End of clause)

52.219-8 UTILIZATION OF SMALL BUSINESS CONCERNS (OCT 1999)

(a) It is the policy of the United States that small business concerns, HUBZone small business concerns, small business concerns owned and controlled by socially and economically disadvantaged individuals, and small business concerns owned and controlled by women shall have the maximum practicable opportunity to participate in performing contracts let by any Federal agency, including contracts and subcontracts for subsystems, assemblies, components, and related services for major systems. It is further the policy of the United States that its prime contractors establish procedures to ensure the timely payment of amounts due pursuant to the terms of their subcontracts with small business concerns, HUBZone small business concerns, small business concerns owned and controlled by socially and economically disadvantaged individuals, and small business concerns owned and controlled by women.

(b) The Contractor hereby agrees to carry out this policy in the awarding of subcontracts to the fullest extent consistent with efficient contract performance. The Contractor further agrees to cooperate in any studies or surveys as may be conducted by the United States Small Business Administration or the awarding agency of the United States as may be necessary to determine the extent of the Contractor's compliance with this clause.

(c) Definitions. As used in this contract (1) Small business concern means a small business as defined pursuant to section 3 of the Small Business Act and relevant regulations promulgated pursuant thereto.

(2) HUBZone small business concern means a small business concern that appears on the List of Qualified HUBZone Small Business Concerns maintained by the Small Business Administration.

(3) Small business concern owned and controlled by socially and economically disadvantaged individuals and small disadvantaged business concern mean a small business concern that represents, as part of its offer that--

(i) It has received certification as a small disadvantaged business concern consistent with 13 CFR 124, Subpart B;

(ii) No material change in disadvantaged ownership and control has occurred since its certification ;

(iii) Where the concern is owned by one or more individuals, the net worth of each individual upon whom the certification is based does not exceed $750,000 after taking into account the applicable exclusions set forth at 13 CFR 124.104(c)(2); and

(iv) It is identified, on the date of its representation, as a certified small disadvantaged business in the database maintained by the Small Business Administration (PRO-Net).

(4) Small business concern owned and controlled by women means a small business concern--

(i) Which is at least 51 percent owned by one or more women, or, in the case of any publicly owned business, at least 51 percent of the stock of which is owned by one or more women; and

(ii) Whose management and daily business operations are controlled by one or more women.

(d) Contractors acting in good faith may rely on written representations by their subcontractors regarding their status as a small business concern, a HUBZone small business concern, a small business concern owned and controlled by socially and economically disadvantaged individuals, or a small business concern owned and controlled by women.

(End of clause)

52.219-9 SMALL, SMALL DISADVANTAGED AND WOMEN-OWNED SMALL BUSINESS SUBCONTRACTING PLAN (OCT 1999)--ALTERNATE I (JAN 1999).

(a) This clause does not apply to small business concerns.

(b) "Commercial product," as used in this clause, means a product in regular production that is sold in substantial quantities to the general public and/or industry at established catalog or market prices. It also means a product which, in the opinion of the Contracting Officer, differs only insignificantly from the Contractor's commercial product.

"Subcontract," as used in this clause, means any agreement (other than one involving an employer-employee relationship) entered into by a Federal Government prime Contractor or subcontractor calling for supplies or services required for performance of the contract or subcontract.

(c) The apparent low bidder, upon request by the Contracting Officer, shall submit a subcontracting plan, where applicable, that separately addresses subcontracting with small business, HUBZone small business, small disadvantaged business, and women-owned small business concerns. If the bidder is submitting an individual contract plan, the plan must separately address subcontracting with small business, HUBZone small business, small disadvantaged business, and women-owned small business concerns, with a separate part for the basic contract and separate parts for each option (if any). The plan shall be included in and made a part of the resultant contract. The subcontracting plan shall be submitted within the time specified by the Contracting Officer. Failure to submit the subcontracting plan shall make the bidder ineligible for the award of a contract.

(d) The offeror's subcontracting plan shall include the following:

(1) Goals, expressed in terms of percentages of total planned subcontracting dollars, for the use of small business, HUBZone small business, small disadvantaged business, and women-owned small business concerns as subcontractors. The offeror shall include all subcontracts that contribute to contract performance, and may include a proportionate share of products and services that are normally allocated as indirect costs.

(2) A statement of--

(i) Total dollars planned to be subcontracted;

(ii) Total dollars planned to be subcontracted to small business concerns;

(iii) Total dollars planned to be subcontracted to HUBZone small business concerns;

(iv) Total dollars planned to be subcontracted to small disadvantaged business concerns; and

(v) Total dollars planned to be subcontracted to women-owned small business concerns.

(3) A description of the principal types of supplies and services to be subcontracted, and an identification of the types planned for subcontracting to--

(i) Small business concerns;

(ii) HUBZone small business concerns;

(iii) Small disadvantaged business concerns; and

(iv) Women-owned small business concerns.

(4) A description of the method used to develop the subcontracting goals in paragraph (d)(1) of this clause.

(5) A description of the method used to identify potential sources for solicitation purposes (e.g., existing company source lists, the Procurement Marketing and Access Network (PRO-Net) of the Small Business Administration (SBA), the National Minority Purchasing Council Vendor Information Service, the Research and Information Division of the Minority Business Development Agency in the Department of Commerce, or small, HUBZone, small disadvantaged, and women-owned small business trade associations). A firm may rely on the information contained in PRO-Net as an accurate representation of a concern's size and ownership characteristics for the purposes of maintaining a small, HUBZone, small disadvantaged and women-owned small business source list. Use of PRO-Net as its source list does not relieve a firm of its responsibilities (e.g., outreach, assistance, counseling, or publicizing subcontracting opportunities) in this clause.

(6) A statement as to whether or not the offeror in included indirect costs in establishing subcontracting goals, and a description of the method used to determine the proportionate share of indirect costs to be incurred with—

(i) Small business concerns;

(ii) HUBZone small business concerns;

(iii) Small disadvantaged business concerns; and

(iv) Women-owned small business concerns.

(7) The name of the individual employed by the offeror who will administer the offeror's subcontracting program, and a description of the duties of the individual.

(8) A description of the efforts the offeror will make to assure that small business, HUBZone small business, small disadvantaged and women-owned small business concerns have an equitable opportunity to compete for subcontracts.

(9) Assurances that the offeror will include the clause of this contract entitled "Utilization of Business Concerns" in all subcontracts that offer further subcontracting opportunities, and that the offeror will require all subcontractors (except small business concerns) who receive subcontracts in excess of $500,000 ($1,000,000 for construction of any public facility) to adopt a plan similar to the plan agreed to by the offeror.

(10) Assurances that the offeror will (i) cooperate in any studies or surveys as may be required, (ii) submit periodic reports in order to allow the Government to determine the extent of compliance by the offeror with the subcontracting plan, (iii) submit Standard Form (SF) 294, Subcontracting Report for Individual Contracts, and/or SF 295, Summary Subcontract Report, in accordance with the instructions on the forms or as provided in agency regulations and in paragraph (j) of this clause; and (iv) ensure that its subcontractors agree to submit Standard Forms 294 and 295.

(11) A description of the types of records that will be maintained concerning procedures that have been adopted to comply with the requirements and goals in the plan, including establishing source lists; and a description of the offeror's efforts to locate small business, HUBZone small business, small disadvantaged

business, and women-owned small business concerns and award subcontracts to them. The records shall include at least the following (on a plant-wide or company-wide basis, unless otherwise indicated)

(i) Source lists (e.g., PRO-Net), guides, and other data that identify small business, HUBZone small business, small disadvantaged business, and women-owned small business concerns.

(ii) Organizations contacted in an attempt to locate sources that are small business, HUBZone small business, small disadvantaged business, or women-owned small business concerns.

(iii) Records on each subcontract solicitation resulting in an award of more than $100,000, indicating--

(A) Whether small business concerns were solicited and, if not, why not;

(B) Whether HUBZone small business concerns were solicited and, if not, why not;

(C) Whether small disadvantaged business concerns were solicited and, if not, why not;

(D) Whether women-owned small business concerns were solicited and, if not, why not; and

(E) If applicable, the reason award was not made to a small business concern.

(iv) Records of any outreach efforts to contact--

(A) Trade associations;

(B) Business development organizations; and

(C) Conferences and trade fairs to locate small, HUBZone small, small disadvantaged, and women-owned small business sources.

(v) Records of internal guidance and encouragement provided to buyers through--

(A) Workshops, seminars, training, etc.; and

(B) Monitoring performance to evaluate compliance with the program's requirements.

(vi) On a contract-by-contract basis, records to support award data submitted by the offeror to the Government, including the name, address, and business size of each subcontractor. Contractors having commercial plans need not comply with this requirement.

(e) In order to effectively implement this plan to the extent consistent with efficient contract performance, the Contractor shall perform the following functions:

(1) Assist small business, HUBZone small business, small disadvantaged business, and women-owned small business concerns by arranging solicitations, time for the preparation of bids, quantities, specifications, and delivery schedules so as to facilitate the participation by such concerns. Where the Contractor's lists of potential small business, HUBZone small business, small disadvantaged business, and women-owned small business subcontractors are excessively long, reasonable effort shall be made to give all such small business concerns an opportunity to compete over a period of time.

(2) Provide adequate and timely consideration of the potentialities of small business, HUBZone small business, small disadvantaged business, and women-owned small business concerns in all ``make-or-buy'' decisions.

(3) Counsel and discuss subcontracting opportunities with representatives of small business, HUBZone small business, small disadvantaged business, and women-owned small business firms.

(4) Provide notice to subcontractors concerning penalties and remedies for misrepresentations of business status as small, HUBZone small, small disadvantaged, or women-owned small business for the purpose of obtaining a subcontract that is to be included as part or all of a goal contained in the Contractor's subcontracting plan.

(f) A master subcontracting plan on a plant or division-wide basis which contains all the elements required by paragraph (d) of this clause, except goals, may be incorporated by reference as a part of the subcontracting plan required of the offeror by this clause; provided, (1) the master plan has been approved, (2) the offeror ensures that the master plan is updated as necessary and provides copies of the approved master plan, including evidence of its approval, to the Contracting Officer, and (3) goals and any deviations from the master plan deemed necessary by the Contracting Officer to satisfy the requirements of this contract are set forth in the individual subcontracting plan.

(g)(1) If a commercial product is offered, the subcontracting plan required by this clause may relate to the offeror's production generally, for both commercial and noncommercial products, rather than solely to the Government contract. In these cases, the offeror shall, with the concurrence of the Contracting Officer, submit one company-wide or division-wide annual plan.

(2) The annual plan shall be reviewed for approval by the agency awarding the offeror its first prime contract requiring a subcontracting plan during the fiscal year, or by an agency satisfactory to the Contracting Officer.

(3) The approved plan shall remain in effect during the offeror's fiscal year for all of the offeror's commercial products.

(h) Prior compliance of the offeror with other such subcontracting plans under previous contracts will be con-sidered by the Contracting Officer in determining the responsibility of the offeror for award of the contract.

(i) The failure of the Contractor or subcontractor to comply in good faith with (1) the clause of this contract entitled "Utilization Of Business Concerns," or (2) an approved plan required by this clause, shall be a material breach of the contract.

(j) The Contractor shall submit the following reports:

(1) Standard Form 294, Subcontracting Report for Individual Contracts. This report shall be submitted to the Contracting Officer semiannually and at contract completion. The report covers subcontract award data related to this contract. This report is not required for commercial plans.

(2) Standard Form 295, Summary Subcontract Report. This report encompasses all the contracts with the awarding agency. It must be submitted semi-annually for contracts with the Department of Defense and annually for contracts with civilian agencies. If the reporting activity is covered by a commercial plan, the reporting activity must report annually all subcontract awards under that plan. All reports submitted at the close of each fiscal year (both individual and commercial plans) shall include a breakout, in the Contractor's format, of subcontract awards, in whole dollars, to small disadvantaged business concerns by Standard Industrial Classification (SIC) Major Group. For a commercial plan, the Contractor may obtain from each of its subcontractors a predominant SIC Major Group and report all awards to that subcontractor under its predominant SIC Major Group.

(End of clause)

52.219-16 LIQUIDATED DAMAGES-SUBCONTRACTING PLAN(JAN 1999)

(a) Failure to make a good faith effort to comply with the subcontracting plan, as used in this clause, means a willful or intentional failure to perform in accordance with the requirements of the subcontracting plan

approved under the clause in this contract entitled "Small Business Subcontracting Plan," or willful or intentional action to frustrate the plan.

(b) Performance shall be measured by applying the percentage goals to the total actual subcontracting dollars or, if a commercial plan is involved, to the pro rata share of actual subcontracting dollars attributable to Government contracts covered by the commercial plan. If, at contract completion or, in the case of a commercial plan, at the close of the fiscal year for which the plan is applicable, the Contractor has failed to meet its subcontracting goals and the Contracting Officer decides in accordance with paragraph (c) of this clause that the Contractor failed to make a good faith effort to comply with its subcontracting plan, established in accordance with the clause in this contract entitled ``Small Business Subcontracting Plan," the Contractor shall pay the Government liquidated damages in an amount stated. The amount of probable damages attributable to the Contractor's failure to comply shall be an amount equal to the actual dollar amount by which the Contractor failed to achieve each subcontract goal.

(c) Before the Contracting Officer makes a final decision that the Contractor has failed to make such good faith effort, the Contracting Officer shall give the Contractor written notice specifying the failure and permitting the Contractor to demonstrate what good faith efforts have been made and to discuss the matter. Failure to respond to the notice may be taken as an admission that no valid explanation exists. If, after consideration of all the pertinent data, the Contracting Officer finds that the Contractor failed to make a good faith effort to comply with the subcontracting plan, the Contracting Officer shall issue a final decision to that effect and require that the Contractor pay the Government liquidated damages as provided in paragraph (b) of this clause.

(d) With respect to commercial plans, the Contracting Officer who approved the plan will perform the functions of the Contracting Officer under this clause on behalf of all agencies with contracts covered by the commercial plan.

(e) The Contractor shall have the right of appeal, under the clause in this contract entitled Disputes, from any final decision of the Contracting Officer.

(f) Liquidated damages shall be in addition to any other remedies that the Government may have.

(End of clause)

52.222-3 CONVICT LABOR (AUG 1996)

The Contractor agrees not to employ in the performance of this contract any person undergoing a sentence of imprisonment which has been imposed by any court of a State, the District of Columbia, the Commonwealth of Puerto Rico, the Virgin Islands, Guam, American Samoa, the Commonwealth of the Northern Mariana Islands, or the Trust Territory of the Pacific Islands. This limitation, however, shall not prohibit the employment by the Contractor in the performance of this contract of persons on parole or probation to work at paid employment during the term of their sentence or persons who have been pardoned or who have served their terms. Nor shall it prohibit the employment by the Contractor in the performance of this contract of persons confined for violation of the laws of any of the States, the District of Columbia, the Commonwealth of Puerto Rico, the Virgin Islands, Guam, American Samoa, the Commonwealth of the Northern Mariana Islands, or the Trust Territory of the Pacific Islands who are authorized to work at paid employment in the community under the laws of such jurisdiction, if--

(a)(1) The worker is paid or is in an approved work training program on a voluntary basis;

(2) Representatives of local union central bodies or similar labor union organizations have been consulted;

(3) Such paid employment will not result in the displacement of employed workers, or be applied in skills, crafts, or trades in which there is a surplus of available gainful labor in the locality, or impair existing contracts for services; and

(4) The rates of pay and other conditions of employment will not be less than those paid or provided for work of a similar nature in the locality in which the work is being performed; and

(b) The Attorney General of the United States has certified that the work-release laws or regulations of the jurisdiction involved are in conformity with the requirements of Executive Order 11755, as amended by Executive Orders 12608 and 12943.

(End of clause)

52.222-4 CONTRACT WORK HOURS AND SAFETY STANDARDS ACT - OVERTIME COMPENSATION. (JUL 1995)

(a) Overtime requirements. No Contractor or subcontractor contracting for any part of the contract work which may require or involve the employment of laborers or mechanics (see Federal Acquisition Regulation (FAR) 22.300) shall require or permit any such laborers or mechanics in any workweek in which the individual is employed on such work to work in excess of 40 hours in such workweek unless such laborer or mechanic receives compensation at a rate not less than 1 1/2 times the basic rate of pay for all hours worked in excess of 40 hours in such workweek.

(b) Violation; liability for unpaid wages; liquidated damages. In the event of any violation of the provisions set forth in paragraph (a) of this clause, the Contractor and any subcontractor responsible therefor shall be liable for the unpaid wages. In addition, such Contractor and subcontractor shall be liable to the United States (in the case of work done under contract for the District of Columbia or a territory, to such District or to such territory), for liquidated damages. Such liquidated damages shall be computed with respect to each individual laborer or mechanics employed in violation of the provisions set forth in paragraph (a) of this clause in the sum of $10 for each calendar day on which such individual was required or permitted to work in excess of the standard workweek of 40 hours without payment of the overtime wages required by provisions set forth in paragraph (a) of this clause.

(c) Withholding for unpaid wages and liquidated damages. The Contracting Officer shall upon his or her own action or upon written request of an authorized representative of the Department of Labor withhold or cause to be withheld, from any moneys payable on account of work performed by the Contractor or subcontractor under any such contract or any other Federal contract with the same Prime Contractor, or any other Federally-assisted contract subject to the Contract Work Hours and Safety Standards Act which is held by the same Prime Contractor, such sums as may be determined to be necessary to satisfy any liabilities of such Contractor or subcontractor for unpaid wages and liquidated damages as provided in the provisions set forth in paragraph (b) of this clause.

(d) Payrolls and basic records. (1) The Contractor or subcontractor shall maintain payrolls and basic payroll records during the course of contract work and shall preserve them for a period of 3 years from the completion of the contract for all laborers and mechanics working on the contract. Such records shall contain the name and address of each such employee, social security number, correct classifications, hourly rates of wages paid, daily and weekly number of hours worked, deductions made, and actual wages paid. Nothing in this paragraph shall require the duplication of records required to be maintained for construction work by Department of Labor regulations at 29 CFR 5.5(a)(3) implementing the Davis-Bacon Act.

(2) The records to be maintained under paragraph (d)(1) of this clause shall be made available by the Contractor or subcontractor for inspection, copying, or transcription by authorized representatives of the Contracting Officer or the Department of Labor. The Contractor or subcontractor shall permit such representatives to interview employees during working hours on the job.

(e) Subcontracts. The Contractor or subcontractor shall insert in any subcontracts exceeding $100,000 the provisions set forth in paragraphs (a) through (e) of this clause and also a clause requiring the subcontractors to include these provisions in any lower tier subcontracts. The Prime Contractor shall be responsible for compliance by any subcontractor or lower tier subcontractor with the provisions set forth in paragraphs (a) through (e) of this clause.

52.222-6 DAVIS-BACON ACT (FEB 1995)

(a) All laborers and mechanics employed or working upon the site of the work will be paid unconditionally and not less often than once a week, and without subsequent deduction or rebate on any account (except such payroll deductions as are permitted by regulations issued by the Secretary of Labor under the Copeland Act (29 CFR Part 3), the full amount of wages and bona fide fringe benefits (or cash equivalents thereof) due at time of payment computed at rates not less than those contained in the wage determination of the Secretary of Labor which is attached hereto and made a part hereof, regardless of any contractual relationship which may be alleged to exist between the Contractor and such laborers and mechanics. Contributions made or costs reasonably anticipated for bona fide fringe benefits under section 1(b)(2) of the Davis-Bacon Act on behalf of laborers or mechanics are considered wages paid to such laborers or mechanics, subject to the provisions of paragraph (d) of this clause; also, regular contributions made or costs incurred for more than a weekly period (but not less often than quarterly) under plans, funds, or programs which cover the particular weekly period, are deemed to be constructively made or incurred during such period. Such laborers and mechanics shall be paid not less than the appropriate wage rate and fringe benefits in the wage determination for the classification of work actually performed, without regard to skill, except as provided in the clause entitled Apprentices and Trainees. Laborers or mechanics performing work in more than one classification may be compensated at the rate specified for each classification for the time actually worked therein; provided, That the employer's payroll records accurately set forth the time spent in each classification in which work is performed. The wage determination (including any additional classifications and wage rates conformed under paragraph (b) of this clause) and the Davis-Bacon poster (WH-1321) shall be posted at all times by the Contractor and its subcontractors at the site of the work in a prominent and accessible place where it can be easily seen by the workers.

(b)(1) The Contracting Officer shall require that any class of laborers or mechanics which is not listed in the wage determination and which is to be employed under the contract shall be classified in conformance with the wage determination. The Contracting Officer shall approve an additional classification and wage rate and fringe benefits therefor only when all the following criteria have been met:

(i) The work to be performed by the classification requested is not performed by a classification in the wage determination.

(ii) The classification is utilized in the area by the construction industry.

(iii) The proposed wage rate, including any bona fide fringe benefits, bears a reasonable relationship to the wage rates contained in the wage determination.

(2) If the Contractor and the laborers and mechanics to be employed in the classification (if known), or their representatives, and the Contracting Officer agree on the classification and wage rate (including the amount designated for fringe benefits, where appropriate), a report of the action taken shall be sent by the Contracting Officer to the Administrator of the Wage and Hour Division, Employment Standards Administration, U.S. Department of Labor, Washington, DC 20210. The Administrator or an authorized representative will approve, modify, or disapprove every additional classification action within 30 days of receipt and so advise the Contracting Officer or will notify the Contracting Officer within the 30-day period that additional time is necessary.

(3) In the event the Contractor, the laborers or mechanics to be employed in the classification, or their representatives, and the Contracting Officer do not agree on the proposed classification and wage rate (including the amount designated for fringe benefits, where appropriate), the Contracting Officer shall refer the questions, including the views of all interested parties and the recommendation of the Contracting Officer, to the Administrator of the Wage and Hour Division for determination. The Administrator, or an authorized representative, will issue a determination within 30 days of receipt and so advise the Contracting Officer or will notify the Contracting Officer within the 30-day period that additional time is necessary.

(4) The wage rate (including fringe benefits, where appropriate) determined pursuant to subparagraphs (b)(2) and (b)(3) of this clause shall be paid to all workers performing work in the classification under this contract from the first day on which work is performed in the classification.

(c) Whenever the minimum wage rate prescribed in the contract for a class of laborers or mechanics includes a fringe benefit which is not expressed as an hourly rate, the Contractor shall either pay the benefit as stated in the wage determination or shall pay another bona fide fringe benefit or an hourly cash equivalent thereof.

(d) If the Contractor does not make payments to a trustee or other third person, the Contractor may consider as part of the wages of any laborer or mechanic the amount of any costs reasonably anticipated in providing bona fide fringe benefits under a plan or program; provided, That the Secretary of Labor has found, upon the written request of the Contractor, that the applicable standards of the Davis-Bacon Act have been met. The Secretary of Labor may require the Contractor to set aside in a separate account assets for the meeting of obligations under the plan or program.

52.222-7 WITHHOLDING OF FUNDS (FEB 1988)

The Contracting Officer shall, upon his or her own action or upon written request of an authorized representative of the Department of Labor, withhold or cause to be withheld from the Contractor under this contract or any other Federal contract with the same Prime Contractor, or any other Federally assisted contract subject to Davis-Bacon prevailing wage requirements, which is held by the same Prime Contractor, so much of the accrued payments or advances as may be considered necessary to pay laborers and mechanics, including apprentices, trainees, and helpers, employed by the Contractor or any subcontractor the full amount of wages required by the contract. In the event of failure to pay any laborer or mechanic, including any apprentice, trainee, or helper, employed or working on the site of the work, all or part of the wages required by the contract, the Contracting Officer may, after written notice to the Contractor, take such action as may be necessary to cause the suspension of any further payment, advance, or guarantee of funds until such violations have ceased.

52.222-8 PAYROLLS AND BASIC RECORDS (FEB 1988)

(a) Payrolls and basic records relating thereto shall be maintained by the Contractor during the course of the work and preserved for a period of 3 years thereafter for all laborers and mechanics working at the site of the work. Such records shall contain the name, address, and social security number of each such worker, his or her correct classification, hourly rates of wages paid (including rates of contributions or costs anticipated for bona fide fringe benefits or cash equivalents thereof of the types described in section 1(b)(2)(B) of the Davis-Bacon Act), daily and weekly number of hours worked, deductions made, and actual wages paid. Whenever the Secretary of Labor has found, under paragraph (d) of the clause entitled Davis-Bacon Act, that the wages of any laborer or mechanic include the amount of any costs reasonably anticipated in providing benefits under a plan or program described in section 1(b)(2)(B) of the Davis-Bacon Act, the Contractor shall maintain records which show that the commitment to provide such benefits is enforceable, that the plan or program is financially responsible, and that the plan or program has been communicated in writing to the laborers or mechanics affected, and records which show the costs anticipated or the actual cost incurred in providing such benefits. Contractors employing apprentices or trainees under approved programs shall maintain written evidence of the registration of apprenticeship programs and certification of trainee programs, the registration of the apprentices and trainees, and the ratios and wage rates prescribed in the applicable programs.

(b)(1) The Contractor shall submit weekly for each week in which any contract work is performed a copy of all payrolls to the Contracting Officer. The payrolls submitted shall set out accurately and completely all of the information required to be maintained under paragraph (a) of this clause. This information may be submitted in any form desired. Optional Form WH-347 (Federal Stock Number 029-005-00014-1) is available for this purpose and may be purchased from the Superintendent of Documents, U.S. Government

Printing Office, Washington, DC 20402. The Prime Contractor is responsible for the submission of copies of payrolls by all subcontractors.

(2) Each payroll submitted shall be accompanied by a "Statement of Compliance," signed by the Contractor or subcontractor or his or her agent who pays or supervises the payment of the persons employed under the contract and shall certify--

(i) That the payroll for the payroll period contains the information required to be maintained under paragraph (a) of this clause and that such information is correct and complete;

(ii) That each laborer or mechanic (including each helper, apprentice, and trainee) employed on the contract during the payroll period has been paid the full weekly wages earned, without rebate, either directly or indirectly, and that no deductions have been made either directly or indirectly from the full wages earned, other than permissible deductions as set forth in the Regulations, 29 CFR Part 3; and

(iii) That each laborer or mechanic has been paid not less than the applicable wage rates and fringe benefits or cash equivalents for the classification of work performed, as specified in the applicable wage determination incorporated into the contract.

(3) The weekly submission of a properly executed certification set forth on the reverse side of Optional Form WH-347 shall satisfy the requirement for submission of the "Statement of Compliance" required by subparagraph (b)(2) of this clause.

(4) The falsification of any of the certifications in this clause may subject the Contractor or subcontractor to civil or criminal prosecution under Section 1001 of Title 18 and Section 3729 of Title 31 of the United States Code.

(c) The Contractor or subcontractor shall make the records required under paragraph (a) of this clause available for inspection, copying, or transcription by the Contracting Officer or authorized representatives of the Contracting Officer or the Department of Labor. The Contractor or subcontractor shall permit the Contracting Officer or representatives of the Contracting Officer or the Department of Labor to interview employees during working hours on the job. If the Contractor or subcontractor fails to submit required records or to make them available, the Contracting Officer may, after written notice to the Contractor, take such action as may be necessary to cause the suspension of any further payment. Furthermore, failure to submit the required records upon request or to make such records available may be grounds for debarment action pursuant to 29 CFR 5.12.

52.222-9 APPRENTICES AND TRAINEES (FEB 1988)

(a) Apprentices. Apprentices will be permitted to work at less than the predetermined rate for the work they performed when they are employed pursuant to and individually registered in a bona fide apprenticeship program registered with the U.S. Department of Labor, Employment and Training Administration, Bureau of Apprenticeship and Training, or with a State Apprenticeship Agency recognized by the Bureau, or if a person is employed in his or her first 90 days of probationary employment as an apprentice in such an apprenticeship program, who is not individually registered in the program, but who has been certified by the Bureau of Apprenticeship and Training or a State Apprenticeship Agency (where appropriate) to be eligible for probationary employment as an apprentice. The allowable ratio of apprentices to journeymen on the job site in any craft classification shall not be greater than the ratio permitted to the Contractor as to the entire work force under the registered program. Any worker listed on a payroll at an apprentice wage rate, who is not registered or otherwise employed as stated in this paragraph, shall be paid not less than the applicable wage determination for the classification of work actually performed. In addition, any apprentice performing work on the job site in excess of the ratio permitted under the registered program shall be paid not less than the applicable wage rate on the wage determination for the work actually performed. Where a contractor is performing construction on a project in a locality other than that in which its program is registered, the ratios and wage rates (expressed in

percentages of the journeyman's hourly rate) specified in the Contractor's or subcontractor's registered program shall be observed. Every apprentice must be paid at not less than the rate specified in the registered program for the apprentice's level of progress, expressed as a percentage of the journeyman hourly rate specified in the applicable wage determination. Apprentices shall be paid fringe benefits in accordance with the provisions of the apprenticeship program. If the apprenticeship program does not specify fringe benefits, apprentices must be paid the full amount of fringe benefits listed on the wage determination for the applicable classification. If the Administrator determines that a different practice prevails for the applicable apprentice classification, fringes shall be paid in accordance with that determination. In the event the Bureau of Apprenticeship and Training, or a State Apprenticeship Agency recognized by the Bureau, withdraws approval of an apprenticeship program, the Contractor will no longer be permitted to utilize apprentices at less than the applicable predetermined rate for the work performed until an acceptable program is approved.

(b) Trainees. Except as provided in 29 CFR 5.16, trainees will not be permitted to work at less than the predetermined rate for the work performed unless they are employed pursuant to and individually registered in a program which has received prior approval, evidenced by formal certification by the U.S. Department of Labor, Employment and Training Administration. The ratio of trainees to journeymen on the job site shall not be greater than permitted under the plan approved by the Employment and Training Administration. Every trainee must be paid at not less than the rate specified in the approved program for the trainee's level of progress, expressed as a percentage of the journeyman hourly rate specified in the applicable wage determination. Trainees shall be paid fringe benefits in accordance with the provisions of the trainee program. If the trainee program does not mention fringe benefits, trainees shall be paid the full amount of fringe benefits listed in the wage determination unless the Administrator of the Wage and Hour Division determines that there is an apprenticeship program associated with the corresponding journeyman wage rate in the wage determination which provides for less than full fringe benefits for apprentices. Any employee listed on the payroll at a trainee rate who is not registered and participating in a training plan approved by the Employment and Training Administration shall be paid not less than the applicable wage rate in the wage determination for the classification of work actually performed. In addition, any trainee performing work on the job site in excess of the ratio permitted under the registered program shall be paid not less than the applicable wage rate in the wage determination for the work actually performed. In the event the Employment and Training Administration withdraws approval of a training program, the Contractor will no longer be permitted to utilize trainees at less than the applicable predetermined rate for the work performed until an acceptable program is approved.

(c) Equal employment opportunity. The utilization of apprentices, trainees, and journeymen under this clause shall be in conformity with the equal employment opportunity requirements of Executive Order 11246, as amended, and 29 CFR Part 30.

52.222-10 COMPLIANCE WITH COPELAND ACT REQUIREMENTS (FEB 1988)

The Contractor shall comply with the requirements of 29 CFR Part 3, which are hereby incorporated by reference in this contract.

52.222-11 SUBCONTRACTS (LABOR STANDARDS (FEB 1988)

(a) The Contractor or subcontractor shall insert in any subcontracts the clauses entitled Davis-Bacon Act, Contract Work Hours and Safety Standards Act-Overtime Compensation, Apprentices and Trainees, Payrolls and Basic Records, Compliance with Copeland Act Requirements, Withholding of Funds, Subcontracts (Labor Standards), Contract Termination-Debarment, Disputes Concerning Labor Standards, Compliance with Davis-Bacon and Related Act Regulations, and Certification of Eligibility, and such other clauses as the Contracting Officer may, by appropriate instructions, require, and also a clause requiring subcontractors to include these clauses in any lower tier subcontracts. The Prime Contractor shall be responsible for compliance by any subcontractor or lower tier subcontractor with all the contract clauses

cited in this paragraph.

(b)(1) Within 14 days after award of the contract, the Contractor shall deliver to the Contracting Officer a completed Statement and Acknowledgment Form (SF 1413) for each subcontract, including the subcontractor's signed and dated acknowledgment that the clauses set forth in paragraph (a) of this clause have been included in the subcontract.

(2) Within 14 days after the award of any subsequently awarded subcontract the Contractor shall deliver to the Contracting Officer an updated completed SF 1413 for such additional subcontract.

52.222-12 CONTRACT TERMINATION--DEBARMENT (FEB 1988)

A breach of the contract clauses entitled Davis-Bacon Act, Contract Work Hours and Safety Standards Act--Overtime Compensation, Apprentices and Trainees, Payrolls and Basic Records, Compliance with Copeland Act Requirements, Subcontracts (Labor Standards), Compliance with Davis-Bacon and Related Act Regulations, or Certification of Eligibility may be grounds for termination of the contract, and for debarment as a Contractor and subcontractor as provided in 29 CFR 5.12.

52.222-13 COMPLIANCE WITH DAVIS-BACON AND RELATED ACT REGULATIONS (FEB 1988)

All rulings and interpretations of the Davis-Bacon and Related Acts contained in 29 CFR Parts 1, 3, and 5 are hereby incorporated by reference in this contract.

52.222-14 DISPUTES CONCERNING LABOR STANDARDS (FEB 1988)

The United States Department of Labor has set forth in 29 CFR Parts 5, 6, and 7 procedures for resolving disputes concerning labor standards requirements. Such disputes shall be resolved in accordance with those procedures and not the Disputes clause of this contract. Disputes within the meaning of this clause include disputes between the Contractor (or any of its subcontractors) and the contracting agency, the U.S. Department of Labor, or the employees or their representatives.

52.222-15 CERTIFICATION OF ELIGIBILITY (FEB 1988)

(a) By entering into this contract, the Contractor certifies that neither it (nor he or she) nor any person or firm who has an interest in the Contractor's firm is a person or firm ineligible to be awarded Government contracts by virtue of section 3(a) of the Davis-Bacon Act or 29 CFR 5.12(a)(1).

(b) No part of this contract shall be subcontracted to any person or firm ineligible for award of a Government contract by virtue of section 3(a) of the Davis-Bacon Act or 29 CFR 5.12(a)(1).

(c) The penalty for making false statements is prescribed in the U.S. Criminal Code, 18 U.S.C. 1001.

52.222-26 EQUAL OPPORTUNITY (FEB 1999)

(a) If, during any 12-month period (including the 12 months preceding the award of this contract), the Contractor has been or is awarded nonexempt Federal contracts and/or subcontracts that have an aggregate value in excess of $10,000, the Contractor shall comply with subparagraphs (b)(1) through (11) of this clause. Upon request, the Contractor shall provide information necessary to determine the applicability of this clause.

(b) During performing this contract, the Contractor agrees as follows:

(1) The Contractor shall not discriminate against any employee or applicant for employment because of race, color, religion, sex, or national origin. However, it shall not be a violation of this clause for the Contractor to extend a publicly announced preference in employment to Indians living on or near an Indian reservation, in connection with employment opportunities on or near an Indian reservation, as permitted by 41 CFR 60-1.5.

(2) The Contractor shall take affirmative action to ensure that applicants are employed, and that employees are treated during employment, without regard to their race, color, religion, sex, or national origin. This shall include, but not be limited to, (i) employment, (ii) upgrading, (iii) demotion, (iv) transfer, (v) recruitment or recruitment advertising, (vi) layoff or termination, (vii) rates of pay or other forms of compensation, and (viii) selection for training, including apprenticeship.

(3) The Contractor shall post in conspicuous places available to employees and applicants for employment the notices to be provided by the Contracting Officer that explain this clause.

(4) The Contractor shall, in all solicitations or advertisements for employees placed by or on behalf of the Contractor, state that all qualified applicants will receive consideration for employment without regard to race, color, religion, sex, or national origin.

(5) The Contractor shall send, to each labor union or representative of workers with which it has a collective bargaining agreement or other contract or understanding, the notice to be provided by the Contracting Officer advising the labor union or workers' representative of the Contractor's commitments under this clause, and post copies of the notice in conspicuous places available to employees and applicants for employment.

(6) The Contractor shall comply with Executive Order 11246, as amended, and the rules, regulations, and orders of the Secretary of Labor.

(7) The Contractor shall furnish to the contracting agency all information required by Executive Order 11246, as amended, and by the rules, regulations, and orders of the Secretary of Labor. The Contractor shall also file Standard Form 100 (EEO-1), or any successor form, as prescribed in 41 CFR part 60-1. Unless the Contractor has filed within the 12 months preceding the date of contract award, the Contractor shall, within 30 days after contract award, apply to either the regional Office of Federal Contract Compliance Programs (OFCCP) or the local office of the Equal Employment Opportunity Commission for the necessary forms.

(8) The Contractor shall permit access to its premises, during normal business hours, by the contracting agency or the OFCCP for the purpose of conducting on-site compliance evaluations and complaint investigations. The Contractor shall permit the Government to inspect and copy any books, accounts, records (including computerized records), and other material that may be relevant to the matter under investigation and pertinent to compliance with Executive Order 11246, as amended, and rules and regulations that implement the Executive Order.

(9) If the OFCCP determines that the Contractor is not in compliance with this clause or any rule, regulation, or order of the Secretary of Labor, this contract may be canceled, terminated, or suspended in whole or in part and the Contractor may be declared ineligible for further Government contracts, under the procedures authorized in Executive Order 11246, as amended. In addition, sanctions may be imposed and remedies invoked against the Contractor as provided in Executive Order 11246, as amended; in the rules, regulations, and orders of the Secretary of Labor; or as otherwise provided by law.

(10) The Contractor shall include the terms and conditions of subparagraphs (b)(1) through (11) of this clause in every subcontract or purchase order that is not exempted by the rules, regulations, or orders of the Secretary of Labor issued under Executive Order 11246, as amended, so that these terms and conditions will be binding upon each subcontractor or vendor.

(11) The Contractor shall take such action with respect to any subcontract or purchase order as the contracting officer may direct as a means of enforcing these terms and conditions, including sanctions for noncompliance; provided, that if the Contractor becomes involved in, or is threatened with, litigation with a subcontractor or vendor as a result of any direction, the Contractor may request the United States to enter into the litigation to protect the interests of the United States.

(c) Notwithstanding any other clause in this contract, disputes relative to this clause will be governed by the procedures in 41 CFR 60-1.1.

52.222-27 AFFIRMATIVE ACTION COMPLIANCE REQUIREMENTS FOR CONSTRUCTION (FEB 1999)

(a) Definitions. "Covered area," as used in this clause, means the geographical area described in the solicitation for this contract.

"Deputy Assistant Secretary," as used in this clause, means Deputy Assistant Secretary for Federal Contract Compliance, U.S. Department of Labor, or a designee.

"Employer's identification number," as used in this clause, means the Federal Social Security number used on the employer's quarterly federal tax return, U.S. Treasury Department Form 941.

"Minority," as used in this clause, means--

(1) American Indian or Alaskan Native (all persons having origins in any of the original peoples of North America and maintaining identifiable tribal affiliations through membership and participation or community identification).

(2) Asian and Pacific Islander (all persons having origins in any of the original peoples of the Far East, Southeast Asia, the Indian Subcontinent, or the Pacific Islands);

(3) Black (all persons having origins in any of the black African racial groups not of Hispanic origin); and

(4) Hispanic (all persons of Mexican, Puerto Rican, Cuban, Central or South American, or other Spanish culture or origin, regardless of race).

(b) If the Contractor, or a subcontractor at any tier, subcontracts a portion of the work involving any construction trade, each such subcontract in excess of $10,000 shall include this clause and the Notice containing the goals for minority and female participation stated in the solicitation for this contract.

(c) If the Contractor is participating in a Hometown Plan (41 CFR 60-4) approved by the U.S. Department of Labor in a covered area, either individually or through an association, its affirmative action obligations on all work in the plan area (including goals) shall comply with the plan for those trades that have unions participating in the plan. Contractors must be able to demonstrate participation in, and compliance with, the provisions of the plan. Each Contractor or subcontractor participating in an approved plan is also required to comply with its obligations under the Equal Opportunity clause, and to make a good faith effort to achieve each goal under the plan in each trade in which it has employees. The overall good-faith performance by other Contractors or subcontractors toward a goal in an approved plan does not excuse any Contractor's or subcontractor's failure to make good-faith efforts to achieve the plan's goals.

(d) The Contractor shall implement the affirmative action procedures in subparagraphs (g)(1) through (16) of this clause. The goals stated in the solicitation for this contract are expressed as percentages of the total hours of employment and training of minority and female utilization that the Contractor should reasonably be able to achieve in each construction trade in which it has employees in the covered area. If the Contractor performs construction work in a geographical area located outside of the covered area, it shall

apply the goals established for the geographical area where that work is actually performed. The Contractor is expected to make substantially uniform progress toward its goals in each craft.

(e) Neither the terms and conditions of any collective bargaining agreement, nor the failure by a union with which the Contractor has a collective bargaining agreement, to refer minorities or women shall excuse the Contractor's obligations under this clause, Executive Order 11246, as amended, or the regulations thereunder.

(f) In order for the nonworking training hours of apprentices and trainees to be counted in meeting the goals, apprentices and trainees must be employed by the Contractor during the training period, and the Contractor must have made a commitment to employ the apprentices and trainees at the completion of their training, subject to the availability of employment opportunities. Trainees must be trained pursuant to training programs approved by the U.S. Department of Labor.

(g) The Contractor shall take affirmative action to ensure equal employment opportunity. The evaluation of the Contractor's compliance with this clause shall be based upon its effort to achieve maximum results from its actions. The Contractor shall document these efforts fully and implement affirmative action steps at least as extensive as the following:

(1) Ensure a working environment free of harassment, intimidation, and coercion at all sites and in all facilities where the Contractor's employees are assigned to work. The Contractor, if possible, will assign two or more women to each construction project. The Contractor shall ensure that foremen, superintendents, and other onsite supervisory personnel are aware of and carry out the Contractor's obligation to maintain such a working environment, with specific attention to minority or female individuals working at these sites or facilities.

(2) Establish and maintain a current list of sources for minority and female recruitment. Provide written notification to minority and female recruitment sources and community organizations when the Contractor or its unions have employment opportunities available, and maintain a record of the organizations' responses.

(3) Establish and maintain a current file of the names, addresses, and telephone numbers of each minority and female off-the-street applicant, referrals of minorities or females from unions, recruitment sources, or community organizations, and the action taken with respect to each individual. If an individual was sent to the union hiring hall for referral and not referred back to the Contractor by the union or, if referred back, not employed by the
Contractor, this shall be documented in the file, along with whatever additional actions the Contractor may have taken.

(4) Immediately notify the Deputy Assistant Secretary when the union or unions with which the Contractor has a collective bargaining agreement has not referred back to the Contractor a minority or woman sent by the Contractor, or when the Contractor has other information that the union referral process has impeded the Contractor's efforts to meet its obligations.

(5) Develop on-the-job training opportunities and/or participate in training programs for the area that expressly include minorities and women, including upgrading programs and apprenticeship and trainee programs relevant to the Contractor's employment needs, especially those programs funded or approved by the Department of Labor. The Contractor shall provide notice of these programs to the sources compiled under subparagraph (g)(2) of this clause.

(6) Disseminate the Contractor's equal employment policy by--

(i) Providing notice of the policy to unions and to training, recruitment, and outreach programs, and requesting their cooperation in assisting the Contractor in meeting its contract obligations;

(ii) Including the policy in any policy manual and in collective bargaining agreements;

(iii) Publicizing the policy in the company newspaper, annual report, etc.;

(iv) Reviewing the policy with all management personnel and with all minority and female employees at least once a year; and

(v) Posting the policy on bulletin boards accessible to employees at each location where construction work is performed.

(7) Review, at least annually, the Contractor's equal employment policy and affirmative action obligations with all employees having responsibility for hiring, assignment, layoff, termination, or other employment decisions. Conduct review of this policy with all on-site supervisory personnel before initiating construction work at a job site. A written record shall be made and maintained identifying the time and place of these meetings, persons attending, subject matter discussed, and disposition of the subject matter.

(8) Disseminate the Contractor's equal employment policy externally by including it in any advertising in the news media, specifically including minority and female news media. Provide written notification to, and discuss this policy with, other Contractors and subcontractors with which the Contractor does or anticipates doing business.

(9) Direct recruitment efforts, both oral and written, to minority, female, and community organizations, to schools with minority and female students, and to minority and female recruitment and training organizations serving the Contractor's recruitment area and employment needs. Not later than 1 month before the date for acceptance of applications for apprenticeship or training by any recruitment source, send written notification to organizations such as the above, describing the openings, screening procedures, and tests to be used in the selection process.

(10) Encourage present minority and female employees to recruit minority persons and women. Where reasonable, provide after-school, summer, and vacation employment to minority and female youth both on the site and in other areas of the Contractor's workforce.

(11) Validate all tests and other selection requirements where required under 41 CFR 60-3.

(12) Conduct, at least annually, an inventory and evaluation at least of all minority and female personnel for promotional opportunities. Encourage these employees to seek or to prepare for, through appropriate training, etc., opportunities for promotion.

(13) Ensure that seniority practices, job classifications, work assignments, and other personnel practices do not have a discriminatory effect by continually monitoring all personnel and employment-related activities to ensure that the Contractor's obligations under this contract are being carried out.

(14) Ensure that all facilities and company activities are nonsegregated except that separate or single-user rest rooms and necessary dressing or sleeping areas shall be provided to assure privacy between the sexes.

(15) Maintain a record of solicitations for subcontracts for minority and female construction contractors and suppliers, including circulation of solicitations to minority and female contractor associations and other business associations.

(16) Conduct a review, at least annually, of all supervisors' adherence to and performance under the Contractor's equal employment policy and affirmative action obligations.

(h) The Contractor is encouraged to participate in voluntary associations that may assist in fulfilling one or more of the affirmative action obligations contained in subparagraphs (g)(1) through (16) of this clause. The efforts of a contractor association, joint contractor-union, contractor-community, or similar group of which the contractor is a member and participant may be asserted as fulfilling one or more of its obligations under subparagraphs (g)(1) through (16) of this clause, provided the Contractor--

(1) Actively participates in the group;

(2) Makes every effort to ensure that the group has a positive impact on the employment of minorities and women in the industry;

(3) Ensures that concrete benefits of the program are reflected in the Contractor's minority and female workforce participation;

(4) Makes a good-faith effort to meet its individual goals and timetables; and

(5) Can provide access to documentation that demonstrates the effectiveness of actions taken on behalf of the Contractor. The obligation to comply is the Contractor's, and failure of such a group to fulfill an obligation shall not be a defense for the Contractor's noncompliance.

(i) A single goal for minorities and a separate single goal for women shall be established. The Contractor is required to provide equal employment opportunity and to take affirmative action for all minority groups, both male and female, and all women, both minority and nonminority. Consequently, the Contractor may be in violation of Executive Order 11246, as amended, if a particular group is employed in a substantially disparate manner.

(j) The Contractor shall not use goals or affirmative action standards to discriminate against any person because of race, color, religion, sex, or national origin.

(k) The Contractor shall not enter into any subcontract with any person or firm debarred from Government contracts under Executive Order 11246, as amended.

(l) The Contractor shall carry out such sanctions and penalties for violation of this clause and of the Equal Opportunity clause, including suspension, termination, and cancellation of existing subcontracts, as may be imposed or ordered under Executive Order 11246, as amended, and its implementing regulations, by the OFCCP. Any failure to carry out these sanctions and penalties as ordered shall be a violation of this clause and Executive Order 11246, as amended.

(m) The Contractor in fulfilling its obligations under this clause shall implement affirmative action procedures at least as extensive as those prescribed in paragraph (g) of this clause, so as to achieve maximum results from its efforts to ensure equal employment opportunity. If the Contractor fails to comply with the requirements of Executive Order 11246, as amended, the implementing regulations, or this clause, the Deputy Assistant Secretary shall take action as prescribed in 41 CFR 60-4.8.

(n) The Contractor shall designate a responsible official to--

(1) Monitor all employment-related activity to ensure that the Contractor's equal employment policy is being carried out;

(2) Submit reports as may be required by the Government; and

(3) Keep records that shall at least include for each employee the name, address, telephone number, construction trade, union affiliation (if any), employee identification number, social security number, race, sex, status (e.g., mechanic, apprentice, trainee, helper, or laborer), dates of changes in status, hours worked per week in the indicated trade, rate of pay, and locations at which the work was performed. Records shall be maintained in an easily understandable and retrievable form; however, to the degree that existing records satisfy this requirement, separate records are not required to be maintained.

Nothing contained herein shall be construed as a limitation upon the application of other laws that establish different standards of compliance or upon the requirements for the hiring of local or other area residents (e.g., those under the Public Works Employment Act of 1977 and the Community Development Block

Grant Program).

52.222-35 AFFIRMATIVE ACTION FOR DISABLED VETERANS AND VETERANS OF THE VIETNAM ERA (APR 1998)

(a)) Definitions. As used in this clause--

All employment openings includes all positions except executive and top management, those positions that will be filled from within the contractor's organization, and positions lasting 3 days or less. This term includes full-time employment, temporary employment of more than 3 days' duration, and part-time employment.

Appropriate office of the State employment service system means the local office of the Federal-State national system of public employment offices with assigned responsibility to serve the area where the employment opening is to be filled, including the District of Columbia, Guam, the Commonwealth of Puerto Rico, and the Virgin Islands.

Positions that will be filled from within the Contractor's organization means employment openings for which no consideration will be given to persons outside the Contractor's organization (including any affiliates, subsidiaries, and parent companies) and includes any openings that the Contractor proposes to fill from regularly established ``recall'' lists. The exception does not apply to a particular opening once an employer decides to consider applicants outside of its organization.

Veteran of the Vietnam era means a person who--

(1) Served on active duty for a period of more than 180 days, any part of which occurred between August 5, 1964, and May 7, 1975, and was discharged or released therefrom with other than a dishonorable discharge; or

(2) Was discharged or released from active duty for a service-connected disability if any part of such active duty was performed between August 5, 1964, and May 7, 1975.

(b) General. (1) Regarding any position for which the employee or applicant for employment is qualified, the Contractor shall not discriminate against the individual because the individual is a disabled veteran or a veteran of the Vietnam era. The Contractor agrees to take affirmative action to employ, advance in employment, and otherwise treat qualified disabled veterans and veterans of the Vietnam era without discrimination based upon their disability or veterans' status in all employment practices such as--

(i) Employment;

(ii) Upgrading;

(iii) Demotion or transfer;

(iv) Recruitment;

(v) Advertising;

(vi) Layoff or termination;

(vii) Rates of pay or other forms of compensation; and

(viii) Selection for training, including apprenticeship.

(2) The Contractor agrees to comply with the rules, regulations, and relevant orders of the Secretary of Labor (Secretary) issued under the Vietnam Era Veterans' Readjustment Assistance Act of 1972 (the Act), as amended.

(c) Listing openings. (1) The Contractor agrees to list all employment openings existing at contract award or occurring during contract performance, at an appropriate office of the State employment service system in the locality where the opening occurs. These openings include those occurring at any Contractor facility, including one not connected with performing this contract. An independent corporate affiliate is exempt from this requirement.

(2) State and local government agencies holding Federal contracts of $10,000 or more shall also list all their employment openings with the appropriate office of the State employment service.

(3) The listing of employment openings with the State employment service system is required at least concurrently with using any other recruitment source or effort and involves the obligations of placing a bona fide job order, including accepting referrals of veterans and nonveterans. This listing does not require hiring any particular job applicant or hiring from any particular group of job applicants and is not intended to relieve the Contractor from any requirements of Executive orders or regulations concerning nondiscrimination in employment.

(4) Whenever the Contractor becomes contractually bound to the listing terms of this clause, it shall advise the State employment service system, in each State where it has establishments, of the name and location of each hiring location in the State. As long as the Contractor is contractually bound to these terms and has so advised the State system, it need not advise the State system of subsequent contracts. The Contractor may advise the State system when it is no longer bound by this contract clause.

(d) Applicability. This clause does not apply to the listing of employment openings that occur and are filled outside the 50 States, the District of Columbia, the Commonwealth of Puerto Rico, Guam, and the Virgin Islands.

(e) Postings. (1) The Contractor agrees to post employment notices stating (i) the Contractor's obligation under the law to take affirmative action to employ and advance in employment qualified disabled veterans and veterans of the Vietnam era, and (ii) the rights of applicants and employees.

(2) These notices shall be posted in conspicuous places that are available to employees and applicants for employment. They shall be in a form prescribed by the Deputy Assistant Secretary for Federal Contract Compliance Programs, Department of Labor (Deputy Assistant Secretary), and provided by or through the Contracting Officer.

(3) The Contractor shall notify each labor union or representative of workers with which it has a collective bargaining agreement or other contract understanding, that the Contractor is bound by the terms of the Act, and is committed to take affirmative action to employ, and advance in employment, qualified disabled veterans and veterans of the Vietnam Era.

(f) Noncompliance. If the Contractor does not comply with the requirements of this clause, appropriate actions may be taken under the rules, regulations, and relevant orders of the Secretary issued pursuant to the Act.

(g) Subcontracts. The Contractor shall include the terms of this clause in every subcontract or purchase order of $10,000 or more unless exempted by rules, regulations, or orders of the Secretary. The Contractor shall act as specified by the Deputy Assistant Secretary to enforce the terms, including action for noncompliance.

(End of clause)

52.222-36 AFFIRMATIVE ACTION FOR WORKERS WITH DISABILITIES (JUN 1998)

(a) General. (1) Regarding any position for which the employee or applicant for employment is qualified, the Contractor shall not discriminate against any employee or applicant because of physical or mental disability. The Contractor agrees to take affirmative action to employ, advance in employment, and otherwise treat qualified individuals with disabilities without discrimination based upon their physical or mental disability in all employment practices such as--

(i) Recruitment, advertising, and job application procedures;

(ii) Hiring, upgrading, promotion, award of tenure, demotion, transfer, layoff, termination, right of return from layoff, and rehiring;

(iii) Rates of pay or any other form of compensation and changes in compensation;

(iv) Job assignments, job classifications, organizational structures, position descriptions, lines of progression, and seniority lists;

(v) Leaves of absence, sick leave, or any other leave;

(vi) Fringe benefits available by virtue of employment, whether or not administered by the Contractor;

(vii) Selection and financial support for training, including apprenticeships, professional meetings, conferences, and other related activities, and selection for leaves of absence to pursue training;

(viii) Activities sponsored by the Contractor, including social or recreational programs; and

(ix) Any other term, condition, or privilege of employment.

(2) The Contractor agrees to comply with the rules, regulations, and relevant orders of the Secretary of Labor (Secretary) issued under the Rehabilitation Act of 1973 (29 U.S.C. 793) (the Act), as amended.

(b) Postings. (1) The Contractor agrees to post employment notices stating--

(i) The Contractor's obligation under the law to take affirmative action to employ and advance in employment qualified individuals with disabilities; and

(ii) The rights of applicants and employees.

(2) These notices shall be posted in conspicuous places that are available to employees and applicants for employment. The Contractor shall ensure that applicants and employees with disabilities are informed of the contents of the notice (e.g., the Contractor may have the notice read to a visually disabled individual, or may lower the posted notice so that it might be read by a person in a wheelchair). The notices shall be in a form prescribed by the Deputy Assistant Secretary for Federal Contract Compliance of the U.S. Department of Labor (Deputy Assistant Secretary) and shall be provided by or through the Contracting Officer.

(3) The Contractor shall notify each labor union or representative of workers with which it has a collective bargaining agreement or other contract understanding, that the Contractor is bound by the terms of Section 503 of the Act and is committed to take affirmative action to employ, and advance in employment, qualified individuals with physical or mental disabilities.

(c) Noncompliance. If the Contractor does not comply with the requirements of this clause, appropriate actions may be taken under the rules, regulations, and relevant orders of the Secretary issued pursuant to the Act.

(d) Subcontracts. The Contractor shall include the terms of this clause in every subcontract or purchase order in excess of $10,000 unless exempted by rules, regulations, or orders of the Secretary. The Contractor shall act as specified by the Deputy Assistant Secretary to enforce the terms, including action for noncompliance.

(End of clause)

52.222-37 EMPLOYMENT REPORTS ON DISABLED VETERANS AND VETERANS OF THE VIETNAM ERA (JAN 1999)

(a) Unless the Contractor is a State or local government agency, the Contractor shall report at least annually, as required by the Secretary of Labor, on--

(1) The number of disabled veterans and the number of veterans of the Vietnam era in the workforce of the contractor by job category and hiring location; and

(2) The total number of new employees hired during the period covered by the report, and of that total, the number of disabled veterans, and the number of veterans of the Vietnam era.

(b) The above items shall be reported by completing the form entitled "Federal Contractor Veterans' Employment Report VETS-100."

(c) Reports shall be submitted no later than September 30 of each year beginning September 30, 1988.

(d) The employment activity report required by paragraph (a)(2) of this clause shall reflect total hires during the most recent 12-month period as of the ending date selected for the employment profile report required by paragraph (a)(1) of this clause. Contractors may select an ending date: (1) As of the end of any pay period during the period January through March 1st of the year the report is due, or (2) as of December 31, if the contractor has previous written approval from the Equal Employment Opportunity Commission to do so for purposes of submitting the Employer Information Report EEO-1 (Standard Form 100).

(e) The count of veterans reported according to paragraph (a) of this clause shall be based on voluntary disclosure. Each Contractor subject to the reporting requirements at 38 U.S.C. 4212 shall invite all disabled veterans and veterans of the Vietnam era who wish to benefit under the affirmative action program at 38 U.S.C. 4212 to identify themselves to the Contractor. The invitation shall state that the information is voluntarily provided; that the information will be kept confidential; that disclosure or refusal to provide the information will not subject the applicant or employee to any adverse treatment; and that the information will be used only in accordance with the regulations promulgated under 38 U.S.C. 4212.

(f) Subcontracts. The Contractor shall include the terms of this clause in every subcontract or purchase order of $10,000 or more unless exempted by rules, regulations, or orders of the Secretary.

(End of clause)

52.223-2 CLEAN AIR AND WATER (APR 1984)

(a) "Air Act," as used in this clause, means the Clean Air Act (42 U.S.C. 7401, et seq.).

"Clean air standards," as used in this clause, means--

(1) Any enforceable rules, regulations, guidelines, standards, limitations, orders, controls, prohibitions, work practices, or other requirements contained in, issued under, or otherwise adopted under the Air Act or Executive Order 11738;

(2) An applicable implementation plan as described in section 110(d) of the Air Act (42 U.S.C. 7410(d));

(3) An approved implementation procedure or plan under section 111(c) or section 111(d) of the Air Act (42 U.S.C. 7411(c) or (d)); or

(4) An approved implementation procedure under section 112(d) of the Air Act (42 U.S.C. 7412(d)).

"Clean water standards," as used in this clause, means any enforceable limitation, control, condition, prohibition, standard, or other requirement promulgated under the Water Act or contained in a permit issued to a discharger by the EPA or by a State under an approved program, as authorized by section 402 of the Water Act (33 U.S.C. 1342), or by local government to ensure compliance with pretreatment regulations as required by section 307 of the Water Act (33 U.S.C. 1317).

"Compliance," as used in this clause, means compliance with--

(1) Clean air or water standards; or

(2) A schedule or plan ordered or approved by a court of competent jurisdiction, the EPA, or an air or water pollution control agency under the requirements of the Air Act or Water Act and related regulations.

"Facility," as used in this clause, means any building, plant, installation, structure, mine, vessel or other floating craft, location, or site of operations, owned, leased, or supervised by a Contractor or subcontractor, used in the performance of a contract or subcontract. When a location or site of operations includes more than one building, plant, installation, or structure, the entire location or site shall be deemed a facility except when the Administrator, or a designee, of the EPA determines that independent facilities are collocated in one geographical area.

"Water Act," as used in this clause, means Clean Water Act (33 U.S.C. 1251, et seq.).

(b) The Contractor agrees--

(1) To comply with the requirements of section 114 of the Clean Air Act (42 U.S.C. 7414) and section 308 of the Clean Water Act (33 U.S.C. 1318) relating to inspection, monitoring, entry, reports, and information, as well as other requirements specified in section 114 and section 308 of the Air Act and the Water Act, and all regulations and guidelines issued to implement those acts before the award of this contract;

(2) That no portion of the work required by this prime contract will be performed in a facility listed on the EPA List of Violating Facilities on the date when this contract was awarded unless and until the EPA eliminates the name of the facility from the listing;

(3) To use best efforts to comply with clean air standards and clean water standards at the facility in which the contract is being performed; and

(4) To insert the substance of this clause into any nonexempt subcontract, including this subparagraph (b)(4).

(End of clause)

52.223-6 DRUG-FREE WORKPLACE (JAN 1997)

(a) Definitions. As used in this clause --

"Controlled substance" means a controlled substance in schedules I through V of section 202 of the Controlled Substances Act (21 U.S.C. 812) and as further defined in regulation at 21 CFR 1308.11 - 1308.15.

"Conviction" means a finding of guilt (including a plea of nolo contendere) or imposition of sentence, or both, by any judicial body charged with the responsibility to deter- mine violations of the Federal or State

criminal drug statutes.

"Criminal drug statute" means a Federal or non-Federal criminal statute involving the manufacture, distribution, dispensing, possession, or use of any controlled substance.

"Drug-free workplace" means the site(s) for the performance of work done by the Contractor in connection with a specific contract at which employees of the Contractor are prohibited from engaging in the unlawful manufacture, distribution, dispensing, possession, or use of a controlled substance.

"Employee" means an employee of a Contractor directly engaged in the performance of work under a Government contract. "Directly engaged" is defined to include all direct cost employees and any other Contractor employee who has other than a minimal impact or involvement in contract performance.

"Individual" means an offeror/contractor that has no more than one employee including the offeror/contractor.

(b) The Contractor, if other than an individual, shall-- within 30 days after award (unless a longer period is agreed to in writing for contracts of 30 days or more performance duration), or as soon as possible for contracts of less than 30 days performance duration--

(1) Publish a statement notifying its employees that the unlawful manufacture, distribution, dispensing, possession, or use of a controlled substance is prohibited in the Contractor's workplace and specifying the actions that will be taken against employees for violations of such prohibition;

(2) Establish an ongoing drug-free awareness program to inform such employees about--

(i) The dangers of drug abuse in the workplace;

(ii) The Contractor's policy of maintaining a drug-free workplace;

(iii) Any available drug counseling, rehabilitation, and employee assistance programs; and

(iv) The penalties that may be imposed upon employees for drug abuse violations occurring in the workplace;

(3) Provide all employees engaged in performance of the contract with a copy of the statement required by subparagraph (b)(1) of this clause;

(4) Notify such employees in writing in the statement required by subparagraph (b)(1) of this clause that, as a condition of continued employment on this contract, the employee will--

(i) Abide by the terms of the statement; and

(ii) Notify the employer in writing of the employee's conviction under a criminal drug statute for a violation occurring in the workplace no later than 5 days after such conviction.

(5) Notify the Contracting Officer in writing within 10 days after receiving notice under subdivision (b)(4)(ii) of this clause, from an employee or otherwise receiving actual notice of such conviction. The notice shall include the position title of the employee;

(6) Within 30 days after receiving notice under subdivision (b)(4)(ii) of this clause of a conviction, take one of the following actions with respect to any employee who is convicted of a drug abuse violation occurring in the workplace:

(i) Taking appropriate personnel action against such employee, up to and including termination; or

(ii) Require such employee to satisfactorily participate in a drug abuse assistance or rehabilitation program approved for such purposes by a Federal, State, or local health, law enforcement, or other appropriate agency; and

(7) Make a good faith effort to maintain a drug-free workplace through implementation of subparagraphs (b)(1) though (b)(6) of this clause.

(c) The Contractor, if an individual, agrees by award of the contract or acceptance of a purchase order, not to engage in the unlawful manufacture, distribution, dispensing, possession, or use of a controlled substance while performing this contract.

(d) In addition to other remedies available to the Government, the Contractor's failure to comply with the requirements of paragraph (b) or (c) of this clause may, pursuant to FAR 23.506, render the Contractor subject to suspension of contract payments, termination of the contract for default, and suspension or debarment.

(End of clause)

52.223-14 TOXIC CHEMICAL RELEASE REPORTING (OCT 1996)

(a) Unless otherwise exempt, the Contractor, as owner or operator of a facility used in the performance of this contract, shall file by July 1 for the prior calendar year an annual Toxic Chemical Release Inventory Form (Form R) as described in sections 313(a) and (g) of the Emergency Planning and Community Right-to-Know Act of 1986 (EPCRA) (42 U.S.C. 11023(a) and (g)), and section 6607 of the Pollution Prevention Act of 1990 (PPA) (42 U.S.C. 13106). The Contractor shall file, for each facility subject to the Form R filing and reporting requirements, the annual Form R throughout the life of the contract.

(b) A Contractor owned or operated facility used in the performance of this contract is exempt from the requirement to file an annual Form R if--

(1) The facility does not manufacture, process, or otherwise use any toxic chemicals listed under section 313(c) of EPCRA, 42 U.S.C. 11023(c);

(2) The facility does not have 10 or more full-time employees as specified in section 313(b)(1)(A) of EPCRA, 42 U.S.C. 11023(b)(1)(A);

(3) The facility does not meet the reporting thresholds of toxic chemicals established under of EPCRA, 42 U.S.C. 11023(f) (including the alternate thresholds at 40 CFR 372.27, provided an appropriate certification form has been filed with EPA);

(4) The facility does not fall within Standard Industrial Classification Code (SIC) designations 20 through 39 as set forth in section 19.102 of the Federal Acquisition Regulation (FAR); or

(5) The facility is not located within any State of the United States, the District of Columbia, the Commonwealth of Puerto Rico, Guam, American Samoa, the United States Virgin Islands, the Northern Mariana Islands, or any other territory or possession over which the United States has jurisdiction.

(c) If the Contractor has certified to an exemption in accordance with one or more of the criteria in paragraph (b) of this clause, and after award of the contract circumstances change so that any of its owned or operated facilities used in the performance of this contract is no longer exempt--

(1) The Contractor shall notify the Contracting Officer; and

(2) The Contractor, as owner or operator of a facility used in the performance of this contract that is no longer exempt, shall (i) submit a Toxic Chemical Release Inventory Form (Form R) on or before July 1 for

the prior calendar year during which the facility becomes eligible; and (ii) continue to file the annual Form R for the life of the contract for such facility.

(d) The Contracting Officer may terminate this contract or take other action as appropriate, if the Contractor fails to comply accurately and fully with the EPCRA and PPA toxic chemical release filing and reporting requirements.

(e) Except for acquisitions of commercial items, as defined in FAR Part 2, the Contractor shall--

(1) For competitive subcontracts expected to exceed $100,000 (including all options), include a solicitation provision substantially the same as the provision at FAR 52.223-13, Certification of Toxic Chemical Release Reporting; and

(2) Include in any resultant subcontract exceeding $100,000 (including all options), the substance of this clause, except this paragraph (e).

52.225-5 BUY AMERICAN ACT--CONSTRUCTION MATERIALS (JUNE 1997)

(a) Definitions. As used in this clause--

"Components," means those articles, materials, and supplies incorporated directly into construction materials.

"Construction material," means an article, material, or supply brought to the construction site for incorporation into the building or work. Construction material also includes an item brought to the site pre-assembled from articles, materials, and supplies. However, emergency life safety systems, such as emergency lighting, fire alarm, and audio evacuation systems, which are discrete systems incorporated into a public building or work and which are produced as a complete system, shall be evaluated as a single and distinct construction material regardless of when or how the individual parts or components of such systems are delivered to the construction site.

"Domestic construction material" means (1) an unmanufactured construction material mined or produced in the United States, or (2) a construction material manufactured in the United States, if the cost of its components mined, produced, or manufactured in the United States exceeds 50 percent of the cost of all its components. Components of foreign origin of the same class or kind as the construction materials determined to be unavailable pursuant to subparagraph 25.202(a)(2) of the Federal Acquisition Regulation (FAR) shall be treated as domestic.

(b) (1) The Buy American Act (41 U.S.C. 10a-10d) requires that only domestic construction material be used in performing this contract, except as provided in paragraphs (b)(2) and (b)(3) of this clause.

(2) This requirement does not apply to the excepted construction material or components listed by the Government as follows:

"none"

(3) Other foreign construction material may be added to the list in paragraph (b)(2) of this clause if the Government determines that--

(i) The cost would be unreasonable (the cost of a particular domestic construction material shall be determined to be unreasonable when the cost of such material exceeds the cost of foreign material by more than 6 percent, unless the agency head determines a higher percentage to be appropriate);

(ii) The application of the restriction of the Buy American Act to a particular construction material would be impracticable or inconsistent with the public interest; or

(iii) The construction material is not mined, produced, or manufactured in the United States in sufficient and reasonably available commercial quantities or a satisfactory quality.

(4) The Contractor agrees that only domestic construction material will be used by the Contractor, subcontractors, material men, and suppliers in the performance of this contract, except for foreign construction materials, if any, listed in paragraph (b)(2) of this clause.

(c) Request for determination. (1) Contractors requesting to use foreign construction material under paragraph (b)(3) of this clause shall provide adequate information for Government evaluation of the request for a determination regarding the inapplicability of the Buy American Act. Each submission shall include a description of the foreign and domestic construction materials, including unit of measure, quantity, price, time of delivery or availability, location of the construction project, name and address of the proposed contractor, and a detailed justification of the reason for use of foreign materials cited in accordance with paragraph (b)(3) of this clause. A submission based on unreasonable cost shall include a reasonable survey of the market and a completed price comparison table in the format in paragraph (d) of this clause. The price of construction material shall include all delivery costs to the construction site and any applicable duty (whether or not a duty-free certificate may be issued.)

(2) If the Government determines after contract award that an exception to the Buy American Act applies, the contract shall be modified to allow use of the foreign construction material, and adequate consideration shall be negotiated. However, when the basis for the exception is the unreasonable price of a domestic construction material, adequate consideration shall not be less than the differential established in paragraph (b)(3)(i) of this clause.

(3) If the Government does not determine that an exception to the Buy American Act applies, the use of that particular foreign construction material will be a failure to comply with the Act.

(d) For evaluation of requests under paragraph (c) of this clause based on unreasonable cost, the following information and any applicable supporting data based on the survey of suppliers shall be included in the request:

Foreign and Domestic Construction Materials Price Comparison

Unit of Price

Construction material description measure Quantity (dollars)\1\

Item 1:

Foreign construction material . . . . . .

Domestic construction material . . . . . .

Item 2;

Foreign construction material . . . . . .

Domestic construction material . .. .

List name, address, telephone number, and contact for suppliers surveyed. Attach copy of response; if oral, attach summary.

Include other applicable supporting information.

\1\ Include all delivery costs to the construction site and any applicable duty (whether or not a duty-free entry certificate is issued).

52.225-11 RESTRICTIONS ON CERTAIN FOREIGN PURCHASES (AUG 1998)

(a) Unless advance written approval of the Contracting Officer is obtained, the Contractor shall not acquire, for use in the performance of this contract, any supplies or services originating from sources within, or that were located in or transported from or through, countries whose products are banned from importation into the United States by Executive order or regulations of the Office of Foreign Assets Control, Department of the Treasury. Those countries include Cuba, Iran, Iraq, Libya, North Korea, and Sudan.

(b) The Contractor shall not acquire for use in the performance of this contract any supplies or services from entities controlled by the Government of Iraq.

(c) The Contractor agrees to insert the provisions of this clause, including this paragraph (c), in all subcontracts hereunder.

(End of clause)

52.226-1 UTILIZATION OF INDIAN ORGANIZATIONS AND INDIAN-OWNED ECONOMIC ENTERPRISES (SEP 1996)

(a) For Department of Defense contracts, this clause applies only if the contract includes a subcontracting plan incorporated under the terms of the clause at 52.219-9, Small Business Subcontracting Plan. It does not apply to contracts awarded based on a subcontracting plan submitted and approved under paragraph (g) of the clause at 52.219-9.

(b) Definitions. As used in this clause:

"Indian" means any person who is a member of any Indian tribe, band, group, pueblo or community which is recognized by the Federal Government as eligible for services from the Bureau of Indian Affairs (BIA) in accordance with 25 U.S.C. 1452(c) and any ``Native" as defined in the Alaska Native Claims Settlement Act (43 U.S.C. 1601).

"Indian organization" means the governing body of any Indian tribe or entity established or recognized by the governing body of an Indian tribe for the purposes of 25 U.S.C., chapter 17.

"Indian-owned economic enterprise" means any Indian-owned (as determined by the Secretary of the Interior) commercial, industrial, or business activity established or organized for the purpose of profit, provided that Indian ownership shall constitute not less than 51 percent of the enterprise.

"Indian tribe" means any Indian tribe, band, group, pueblo or community, including native villages and native groups (including corporations organized by Kenai, Juneau, Sitka, and Kodiak) as defined in the Alaska Native Claims Settlement Act, which is recognized by the Federal Government as eligible for services from BIA in accordance with 25 U.S.C. 1542(c).

"Interested party" means a prime contractor or an actual or prospective offeror whose direct economic interest would be affected by the award of a subcontract or by the failure to award a subcontract.

(c)The Contractor agrees to use its best efforts to give Indian organizations and Indian-owned economic enterprises (25 U.S.C. 1544) the maximum practicable opportunity to participate in the subcontracts it awards to the fullest extent consistent with efficient performance of its contract.

(1) The Contracting Officer and the Contractor, acting in good faith, may rely on the representation of an Indian organization or Indian-owned economic enterprise as to its eligibility, unless an interested party challenges its status or the Contracting Officer has independent reason to question that status. In the event of a challenge to the representation of a subcontractor, the Contracting Officer shall refer the matter to the U.S. Department of the Interior, Bureau of Indian Affairs (BIA), Attn: Chief, Division of Contracting and

Grants Administration, 1849 C Street, NW, MS-334A-SIB, Washington, DC 20245. The BIA will determine the eligibility and notify the Contracting Officer. The 5 percent incentive payment will not be made within 50 working days of subcontract award or while a challenge is pending. If a subcontractor is determined to be an ineligible participant, no incentive payment will be made under the Indian Incentive Program.

(2) The Contractor may request an adjustment under the Indian Incentive Program to the following:

(i) The estimated cost of a cost-type contract.

(ii) The target cost of a cost-plus-incentive-fee prime contract.

(iii) The target cost and ceiling price of a fixed-price incentive prime contract.

(iv) The price of a firm-fixed-price prime contract.

(3) The amount of the equitable adjustment to the prime contract shall be 5 percent of the estimated cost, target cost or firm-fixed-price included in the subcontract initially awarded to the Indian organization or Indian-owned economic enterprise.

(4) The Contractor has the burden of proving the amount claimed and must assert its request for an adjustment prior to completion of contract performance.

(d) The Contracting Officer, subject to the terms and conditions of the contract and the availability of funds, shall authorize an incentive payment of 5 percent of the amount paid to the subcontractor. Contracting Officers shall seek funding in accordance with agency procedures. The Contracting Officer's decision is final and not subject to the Disputes clause of this contract.

52.227-1 AUTHORIZATION AND CONSENT (JUL 1995)

(a) The Government authorizes and consents to all use and manufacture, in performing this contract or any subcontract at any tier, of any invention described in and covered by a United States patent (1) embodied in the structure or composition of any article the delivery of which is accepted by the Government under this contract or (2) used in machinery, tools, or methods whose use necessarily results from compliance by the Contractor or a subcontractor with (i) specifications or written provisions forming a part of this contract or (ii) specific written instructions given by the Contracting Officer directing the manner of performance. The entire liability to the Government for infringement of a patent of the United States shall be determined solely by the provisions of the indemnity clause, if any, included in this contract or any subcontract hereunder (including any lower-tier subcontract), and the Government assumes liability for all other infringement to the extent of the authorization and consent hereinabove granted.

(b) The Contractor agrees to include, and require inclusion of, this clause, suitably modified to identify the parties, in all subcontracts at any tier for supplies or services (including construction, architect-engineer services, and materials, supplies, models, samples, and design or testing services expected to exceed the simplified acquisition threshold (however, omission of this clause from any subcontract, including those at or below the simplified acquisition threshold, does not affect this authorization and consent.)

52.227-2 NOTICE AND ASSISTANCE REGARDING PATENT AND COPYRIGHT INFRINGEMENT (AUG 1996)

(a) The Contractor shall report to the Contracting Officer, promptly and in reasonable written detail, each notice or claim of patent or copyright infringement based on the performance of this contract of which the Contractor has knowledge.

(b) In the event of any claim or suit against the Government on account of any alleged patent or copyright infringement arising out of the performance of this contract or out of the use of any supplies furnished or work or services performed under this contract, the Contractor shall furnish to the Government, when requested by the Contracting Officer, all evidence and information in possession of the Contractor pertaining to such suit or claim. Such evidence and information shall be furnished at the expense of the Government except where the Contractor has agreed to indemnify the Government.

(c) The Contractor agrees to include, and require inclusion of, this clause in all subcontracts at any tier for supplies or services (including construction and architect-engineer subcontracts and those for material, supplies, models, samples, or design or testing services) expected to exceed the simplified acquisition threshold at (FAR) 2.101.to exceed the dollar amount set forth in 13.000 of the Federal Acquisition Regulation (FAR).

(End of clause)

52.227-4 PATENT INDEMNITY--CONSTRUCTION CONTRACTS (APR 1984)

Except as otherwise provided, the Contractor agrees to indemnify the Government and its officers, agents, and employees against liability, including costs and expenses, for infringement upon any United States patent (except a patent issued upon an application that is now or may hereafter be withheld from issue pursuant to a Secrecy Order under 35 U.S.C. 181) arising out of performing this contract or out of the use or disposal by or for the account of the Government of supplies furnished or work performed under this contract.

52.228-1 BID GUARANTEE (SEP 1996)

(a) Failure to furnish a bid guarantee in the proper form and amount, by the time set for opening of bids, may be cause for rejection of the bid.

(b) The bidder shall furnish a bid guarantee in the form of a firm commitment, e.g., bid bond supported by good and sufficient surety or sureties acceptable to the Government, postal money order, certified check, cashier's check, irrevocable letter of credit, or, under Treasury Department regulations, certain bonds or notes of the United States. The Contracting Officer will return bid guarantees, other than bid bonds, (1) to unsuccessful bidders as soon as practicable after the opening of bids, and (2) to the successful bidder upon execution of contractual documents and bonds (including any necessary coinsurance or reinsurance agreements), as required by the bid as accepted.-

(c) The amount of the bid guarantee shall be _____ percent of the bid price or $_____, whichever is less.-

(d) If the successful bidder, upon acceptance of its bid by the Government within the period specified for acceptance, fails to execute all contractual documents or furnish executed bond(s) within 10 days after receipt of the forms by the bidder, the Contracting Officer may terminate the contract for default.-

(e) In the event the contract is terminated for default, the bidder is liable for any cost of acquiring the work that exceeds the amount of its bid, and the bid guarantee is available to offset the difference.

52.228-2 ADDITIONAL BOND SECURITY (OCT 1997)

The Contractor shall promptly furnish additional security required to protect the Government and persons supplying labor or materials under this contract if--

(a) Any surety upon any bond, or issuing financial institution for other security, furnished with this contract becomes unacceptable to the Government.

(b) Any surety fails to furnish reports on its financial condition as required by the Government;

(c) The contract price is increased so that the penal sum of any bond becomes inadequate in the opinion of the Contracting Officer; or

(d) An irrevocable letter of credit (ILC) used as security will expire before the end of the period of required security. If the Contractor does not furnish an acceptable extension or replacement ILC, or other acceptable substitute, at least 30 days before an ILC's scheduled expiration, the Contracting officer has the right to immediately draw on the ILC.

52.228-5 INSURANCE--WORK ON A GOVERNMENT INSTALLATION (JAN 1997)

(a) The Contractor shall, at its own expense, provide and maintain during the entire performance of this contract, at least the kinds and minimum amounts of insurance required in the Schedule or elsewhere in the contract.

(b) Before commencing work under this contract, the Contractor shall notify the Contracting Officer in writing that the required insurance has been obtained. The policies evidencing required insurance shall contain an endorsement to the effect that any cancellation or any material change adversely affecting the Government's interest shall not be effective (1) for such period as the laws of the State in which this contract is to be performed prescribe, or (2) until 30 days after the insurer or the Contractor gives written notice to the Contracting Officer, whichever period is longer.

(c) The Contractor shall insert the substance of this clause, including this paragraph (c), in subcontracts under this contract that require work on a Government installation and shall require subcontractors to provide and maintain the insurance required in the Schedule or elsewhere in the contract. The Contractor shall maintain a copy of all subcontractors' proofs of required insurance, and shall make copies available to the Contracting Officer upon request.

(End of clause)

52.228-11 PLEDGES OF ASSETS (FEB 1992)

(a) Offerors shall obtain from each person acting as an individual surety on a bid guarantee, a performance bond, or a payment bond--

(1) Pledge of assets; and

(2) Standard Form 28, Affidavit of Individual Surety.

(b) Pledges of assets from each person acting as an individual surety shall be in the form of--

(1) Evidence of an escrow account containing cash, certificates of deposit, commercial or Government securities, or other assets described in FAR 28.203-2 (except see 28.203-2(b)(2) with respect to Government securities held in book entry form) and/or;

(2) A recorded lien on real estate. The offeror will be required to provide--

(i) Evidence of title in the form of a certificate of title prepared by a title insurance company approved by the United States Department of Justice. This title evidence must show fee simple title vested in the surety along with any concurrent owners; whether any real estate taxes are due and payable; and any recorded encumbrances against the property, including the lien filed in favor of the Government as required by FAR 28.203-3(d);

(ii) Evidence of the amount due under any encumbrance shown in the evidence of title;

(iii) A copy of the current real estate tax assessment of the property or a current appraisal dated no earlier than 6 months prior to the date of the bond, prepared by a professional appraiser who certifies that the appraisal has been conducted in accordance with the generally accepted appraisal standards as reflected in the Uniform Standards of Professional Appraisal Practice, as promulgated by the Appraisal Foundation.

(End of clause)

52.228-14 IRREVOCABLE LETTER OF CREDIT (DEC 1999)

(a) ``Irrevocable letter of credit'' (ILC), as used in this clause, means a written commitment by a federally insured financial institution to pay all or part of a stated amount of money, until the expiration date of the letter, upon presentation by the Government (the beneficiary) of a written demand therefor. Neither the financial institution nor the offeror/Contractor can revoke or condition the letter of credit.

(b) If the offeror intends to use an ILC in lieu of a bid bond, or to secure other types of bonds such as performance and payment bonds, the letter of credit and letter of confirmation formats in paragraphs (e) and (f) of this clause shall be used.

(c) The letter of credit shall be irrevocable, shall require presentation of no document other than a written demand and the ILC (including confirming letter, if any), shall be issued/confirmed by an acceptable federally insured financial institution as provided in paragraph (d) of this clause, and--

(1) If used as a bid guarantee, the ILC shall expire no earlier than 60 days after the close of the bid acceptance period;

(2) If used as an alternative to corporate or individual sureties as security for a performance or payment bond, the offeror/Contractor may submit an ILC with an initial expiration date estimated to cover the entire period for which financial security is required or may submit an ILC with an initial expiration date that is a minimum period of one year from the date of issuance. The ILC shall provide that, unless the issuer provides the beneficiary written notice of non-renewal at least 60 days in advance of the current expiration date, the ILC is automatically extended without amendment for one year from the expiration date, or any future expiration date, until the period of required coverage is completed and the Contracting Officer provides the financial institution with a written statement waiving the right to payment. The period of required coverage shall be:

(i) For contracts subject to the Miller Act, the later of--

(A) One year following the expected date of final payment;

(B) For performance bonds only, until completion of any warranty period; or

(C) For payment bonds only, until resolution of all claims filed against the payment bond during the one-year period following final payment.

(ii) For contracts not subject to the Miller Act, the later of--

(A) 90 days following final payment; or

(B) For performance bonds only, until completion of any warranty period.

(d) Only federally insured financial institutions rated investment grade or higher shall issue or confirm the ILC. The offeror/Contractor shall provide the Contracting Officer a credit rating that indicates the financial institution has the required rating(s) as of the date of issuance of the ILC. Unless the financial institution issuing the ILC had letter of credit business of less than $25 million in the past year, ILCs over $5 million

must be confirmed by another acceptable financial institution that had letter of credit business of less than $25 million in the past year.

(e) The following format shall be used by the issuing financial institution to create an ILC:

_____

[Issuing Financial Institution's Letterhead or Name and Address]

Issue Date _____

IRREVOCABLE LETTER OF CREDIT NO. _____

Account party's name _____

Account party's address _____

For Solicitation No. _____(for reference only)

TO: [U.S. Government agency]

[U.S. Government agency's address]

1. We hereby establish this irrevocable and transferable Letter of Credit in your favor for one or more drawings up to United States $_____. This Letter of Credit is payable at [issuing financial institution's and, if any, confirming financial institution's] office at [issuing financial institution's address and, if any, confirming financial institution's address] and expires with our close of business on _____, or any automatically extended expiration date.

2. We hereby undertake to honor your or the transferee's sight draft(s) drawn on the issuing or, if any, the confirming financial institution, for all or any part of this credit if presented with this Letter of Credit and confirmation, if any, at the office specified in paragraph 1 of this Letter of Credit on or before the expiration date or any automatically extended expiration date.

3. [This paragraph is omitted if used as a bid guarantee, and subsequent paragraphs are renumbered.] It is a condition of this Letter of Credit that it is deemed to be automatically extended without amendment for one year from the expiration date hereof, or any future expiration date, unless at least 60 days prior to any expiration date, we notify you or the transferee by registered mail, or other receipted means of delivery, that we elect not to consider this Letter of Credit renewed for any such additional period. At the time we notify you, we also agree to notify the account party (and confirming financial institution, if any) by the same means of delivery.

4. This Letter of Credit is transferable. Transfers and assignments of proceeds are to be effected without charge to either the beneficiary or the transferee/assignee of proceeds. Such transfer or assignment shall be only at the written direction of the Government (the beneficiary) in a form satisfactory to the issuing financial institution and the confirming financial institution, if any.

5. This Letter of Credit is subject to the Uniform Customs and Practice (UCP) for Documentary Credits, 1993 Revision, International Chamber of Commerce Publication No. 500, and to the extent not inconsistent therewith, to the laws of _____ [state of confirming financial institution, if any, otherwise state of issuing financial institution].

6. If this credit expires during an interruption of business of this financial institution as described in Article 17 of the UCP, the financial institution specifically agrees to effect payment if this credit is drawn against within 30 days after the resumption of our business.

Sincerely,

_____

[Issuing financial institution]

(f) The following format shall be used by the financial institution to confirm an ILC:

_____
[Confirming Financial Institution's Letterhead or Name and Address]

(Date) _____

Our Letter of Credit Advice Number _____

Beneficiary: _____ [U.S. Government agency]

Issuing Financial Institution: _____

Issuing Financial Institution's LC No.: _____

Gentlemen:

1. We hereby confirm the above indicated Letter of Credit, the original of which is attached, issued by _____ [name of issuing financial institution] for drawings of up to United States dollars _____/U.S. $_____ and expiring with our close of business on _____ [the expiration date], or any automatically extended expiration date.

2. Draft(s) drawn under the Letter of Credit and this Confirmation are payable at our office located at _____.

3. We hereby undertake to honor sight draft(s) drawn under and presented with the Letter of Credit and this Confirmation at our offices as specified herein.

4. [This paragraph is omitted if used as a bid guarantee, and subsequent paragraphs are renumbered.] It is a condition of this confirmation that it be deemed automatically extended without amendment for one year from the expiration date hereof, or any automatically extended expiration date, unless:

(a) At least 60 days prior to any such expiration date, we shall notify the Contracting Officer, or the transferee and the issuing financial institution, by registered mail or other receipted means of delivery, that we elect not to consider this confirmation extended for any such additional period; or

(b) The issuing financial institution shall have exercised its right to notify you or the transferee, the account party, and ourselves, of its election not to extend the expiration date of the Letter of Credit.

5. This confirmation is subject to the Uniform Customs and Practice (UCP) for Documentary Credits, 1993 Revision, International Chamber of Commerce Publication No. 500, and to the extent not inconsistent therewith, to the laws of _____ [state of confirming financial institution].

6. If this confirmation expires during an interruption of business of this financial institution as described in Article 17 of the UCP, we specifically agree to effect payment if this credit is drawn against within 30 days after the resumption of our business.

Sincerely,

_____

[Confirming financial institution]

(g) The following format shall be used by the Contracting Officer for a sight draft to draw on the Letter of Credit:

SIGHT DRAFT

_____

[City, State]

(Date) _____

[Name and address of financial institution]

Pay to the order of _____ [Beneficiary Agency] _____ the sum of United States $_____. This draft is drawn under Irrevocable Letter of Credit No. _____.

_____

[Beneficiary Agency]

By: _____

(End of clause)

52.228-15 PERFORMANCE AND PAYMENT BONDS--CONSTRUCTION (SEP 1996)-

(a) Definitions. As used in this clause--

Contract price means the award price of the contract or, for requirements contracts, the price payable for the estimated quantity; or for indefinite-delivery type contracts, the price payable for the specified minimum quantity.

(b) Unless the resulting contract price is $100,000 or less, the successful offeror shall be required to furnish performance and payment bonds to the Contracting Officer as follows:

(1) Performance Bonds (Standard Form 25): (i) The penal amount of performance bonds shall be 100 percent of the original contract price.

(ii) The Government may require additional performance bond protection when the contract price is increased. The increase in protection shall generally equal 100 percent of the increase in contract price.

(iii) The Government may secure additional protection by directing the Contractor to increase the penal amount of the existing bond or to obtain an additional bond.

(2) Payment Bonds (Standard Form 25-A):

(i) The penal amount of payment bonds shall equal--

(A) 50 percent of the contract price if the contract price is not more than $1 million;

(B) 40 percent of the contract price if the contract price is more than $1 million but not more than $5 million; or

(C) $2.5 million if the contract price is more than $5 million.

(ii) If the original contract price is $5 million or less, the Government may require additional protection if the contract price is increased. The penal amount of the total protection shall meet the requirement of subparagraph (b)(2)(i) of this clause.

(iii) The Government may secure additional protection by directing the Contractor to increase the penal sum of the existing bond or to obtain an additional bond.

(c) The Contractor shall furnish all executed bonds, including any necessary reinsurance agreements, to the Contracting Officer, within the time period specified in the Bid Guarantee provision of the solicitation, or otherwise specified by the Contracting Officer, but in any event, before starting work.

(d) The bonds shall be in the form of firm commitment, supported by corporate sureties whose names appear on the list contained in Treasury Department Circular 570, individual sureties, or by other acceptable security such as postal money order, certified check, cashier's check, irrevocable letter of credit, or, in accordance with Treasury Department regulations, certain bonds or notes of the United States. Treasury Circular 570 is published in the Federal Register, or may be obtained from the U.S. Department of Treasury, Financial Management Service, Surety Bond Branch, 401 14th Street, NW., 2nd Floor, West Wing, Washington, DC 20227.

52.229-3 FEDERAL, STATE, AND LOCAL TAXES (JAN 1991)

(a) "Contract date," as used in this clause, means the date set for bid opening or, if this is a negotiated contract or a modification, the effective date of this contract or modification.

"All applicable Federal, State, and local taxes and duties," as used in this clause, means all taxes and duties, in effect on the contract date, that the taxing authority is imposing and collecting on the transactions or property covered by this contract.

"After-imposed Federal tax," as used in this clause, means any new or increased Federal excise tax or duty, or tax that was exempted or excluded on the contract date but whose exemption was later revoked or reduced during the contract period, on the transactions or property covered by this contract that the Contractor is required to pay or bear as the result of legislative, judicial, or administrative action taking effect after the contract date. It does not include social security tax or other employment taxes.
"After-relieved Federal tax," as used in this clause, means any amount of Federal excise tax or duty, except social security or other employment taxes, that would otherwise have been payable on the transactions or property covered by this contract, but which the Contractor is not required to pay or bear, or for which the Contractor obtains a refund or drawback, as the result of legislative, judicial, or administrative action taking effect after the contract date.

(b) The contract price includes all applicable Federal, State, and local taxes and duties.

(c) The contract price shall be increased by the amount of any after-imposed Federal tax, provided the Contractor warrants in writing that no amount for such newly imposed Federal excise tax or duty or rate increase was included in the contract price, as a contingency reserve or otherwise.

(d) The contract price shall be decreased by the amount of any after-relieved Federal tax.

(e) The contract price shall be decreased by the amount of any Federal excise tax or duty, except social security or other employment taxes, that the Contractor is required to pay or bear, or does not obtain a refund of, through the Contractor's fault, negligence, or failure to follow instructions of the Contracting Officer.

(f) No adjustment shall be made in the contract price under this clause unless the amount of the adjustment exceeds $250.

(g) The Contractor shall promptly notify the Contracting Officer of all matters relating to any Federal excise tax or duty that reasonably may be expected to result in either an increase or decrease in the contract price and shall take appropriate action as the Contracting Officer directs.

(h) The Government shall, without liability, furnish evidence appropriate to establish exemption from any Federal, State, or local tax when the Contractor requests such evidence and a reasonable basis exists to sustain the exemption.

(End of clause)

52.232-5 PAYMENTS UNDER FIXED-PRICE CONSTRUCTION CONTRACTS (MAY 1997)

(a) Payment of price. The Government shall pay the Contractor the contract price as provided in this contract.

(b) Progress payments. The Government shall make progress payments monthly as the work proceeds, or at more frequent intervals as determined by the Contracting Officer, on estimates of work accomplished which meets the standards of quality established under the contract, as approved by the Contracting Officer.

(1) The Contractor's request for progress payments shall include the following substantiation:

(i) An itemization of the amounts requested, related to the various elements of work required by the contract covered by the payment requested.

(ii) A listing of the amount included for work performed by each subcontractor under the contract.

(iii) A listing of the total amount of each subcontract under the contract.

(iv) A listing of the amounts previously paid to each such subcontractor under the contract.

(v) Additional supporting data in a form and detail required by the Contracting Officer.

(2) In the preparation of estimates, the Contracting Officer may authorize material delivered on the site and preparatory work done to be taken into consideration. Material delivered to the Contractor at locations other than the site also may be taken into consideration if--

(i) Consideration is specifically authorized by this contract; and

(ii) The Contractor furnishes satisfactory evidence that it has acquired title to such material and that the material will be used to perform this contract.

(c) Contractor certification. Along with each request for progress payments, the Contractor shall furnish the following certification, or payment shall not be made: (However, if the Contractor elects to delete paragraph (c)(4) from the certification, the certification is still acceptable.)

I hereby certify, to the best of my knowledge and belief, that--

(1) The amounts requested are only for performance in accordance with the specifications, terms, and conditions of the contract;

(2) Payments to subcontractors and suppliers have been made from previous payments received under the contract, and timely payments will be made from the proceeds of the payment covered by this certification,

in accordance with subcontract agreements and the requirements of chapter 39 of Title 31, United States Code;

(3) This request for progress payments does not include any amounts which the prime contractor intends to withhold or retain from a subcontractor or supplier in accordance with the terms and conditions of the subcontract; and

(4) This certification is not to be construed as final acceptance of a subcontractor's performance.

_____

(Name)

_____

(Title)

_____

(Date)

(d) Refund of unearned amounts. If the Contractor, after making a certified request for progress payments, discovers that a portion or all of such request constitutes a payment for performance by the Contractor that fails to conform to the specifications, terms, and conditions of this contract (hereinafter referred to as the "unearned amount"), the Contractor shall--

(1) Notify the Contracting Officer of such performance deficiency; and

(2) Be obligated to pay the Government an amount (computed by the Contracting Officer in the manner provided in paragraph (j) of this clause) equal to interest on the unearned amount from the 8th day after the date of receipt of the unearned amount until--

(i) The date the Contractor notifies the Contracting Officer that the performance deficiency has been corrected; or

(ii) The date the Contractor reduces the amount of any subsequent certified request for progress payments by an amount equal to the unearned amount.

(e) Retainage. If the Contracting Officer finds that satisfactory progress was achieved during any period for which a progress payment is to be made, the Contracting Officer shall authorize payment to be made in full. However, if satisfactory progress has not been made, the Contracting Officer may retain a maximum of 10 percent of the amount of the payment until satisfactory progress is achieved. When the work is substantially complete, the Contracting Officer may retain from previously withheld funds and future progress payments that amount the Contracting Officer considers adequate for protection of the Government and shall release to the Contractor all the remaining withheld funds. Also, on completion and acceptance of each separate building, public work, or other division of the contract, for which the price is stated separately in the contract, payment shall be made for the completed work without retention of a percentage.

(f) Title, liability, and reservation of rights. All material and work covered by progress payments made shall, at the time of payment, become the sole property of the Government, but this shall not be construed as--

(1) Relieving the Contractor from the sole responsibility for all material and work upon which payments have been made or the restoration of any damaged work; or

(2) Waiving the right of the Government to require the fulfillment of all of the terms of the contract.

(g) Reimbursement for bond premiums. In making these progress payments, the Government shall, upon request, reimburse the Contractor for the amount of premiums paid for performance and payment bonds (including coinsurance and reinsurance agreements, when applicable) after the Contractor has furnished evidence of full payment to the surety. The retainage provisions in paragraph (e) of this clause shall not apply to that portion of progress payments attributable to bond premiums.

(h) Final payment. The Government shall pay the amount due the Contractor under this contract after--

(1) Completion and acceptance of all work;

(2) Presentation of a properly executed voucher; and

(3) Presentation of release of all claims against
the Government arising by virtue of this contract, other than claims, in stated amounts, that the Contractor has specifically excepted from the operation of the release. A release may also be required of the assignee if the Contractor's claim to amounts payable under this contract has been assigned under the Assignment of Claims Act of 1940 (31 U.S.C. 3727 and 41 U.S.C. 15).

(i) Limitation because of undefinitized work. Notwithstanding any provision of this contract, progress payments shall not exceed 80 percent on work accomplished on undefinitized contract actions. A "contract action" is any action resulting in a contract, as defined in FAR Subpart 2.1, including contract modifications for additional supplies or services, but not including contract modifications that are within the scope and under the terms of the contract, such as contract modifications issued pursuant to the Changes clause, or funding and other administrative changes.

(j) Interest computation on unearned amounts. In accordance with 31 U.S.C. 3903(c)(1), the amount payable under subparagraph (d)(2) of this clause shall be--

(1) Computed at the rate of average bond equivalent rates of 91-day Treasury bills auctioned at the most recent auction of such bills prior to the date the Contractor receives the unearned amount; and

(2) Deducted from the next available payment to the Contractor.

52.232-17 INTEREST (JUNE 1996)

(a) Except as otherwise provided in this contract under a Price Reduction for Defective Cost or Pricing Data clause or a Cost Accounting Standards clause, all amounts that become payable by the Contractor to the Government under this contract (net of any applicable tax credit under the Internal Revenue Code (26 U.S.C. 1481)) shall bear simple interest from the date due until paid unless paid within 30 days of becoming due. The interest rate shall be the interest rate established by the Secretary of the Treasury as provided in Section 12 of the Contract Disputes Act of 1978 (Public Law 95-563), which is applicable to the period in which the amount becomes due, as provided in paragraph (b) of this clause, and then at the rate applicable for each six-month period as fixed by the Secretary until the amount is paid. reproduce, prepare derivative works, distribute copies to the public, and (b) Amounts shall be due at the earliest of the following dates:

(1) The date fixed under this contract.

(2) The date of the first written demand for payment consistent with this contract, including any demand resulting from a default termination.

(3) The date the Government transmits to the Contractor a proposed supplemental agreement to confirm

completed negotiations establishing the amount of debt.

(4) If this contract provides for revision of prices, the date of written notice to the Contractor stating the amount of refund payable in connection with a pricing proposal or a negotiated pricing agreement not confirmed by contract modification.

(c) The interest charge made under this clause may be reduced under the procedures prescribed in 32.614-2 of the Federal Acquisition Regulation in effect on the date of this contract.

52.232-23 ASSIGNMENT OF CLAIMS (JAN 1986)

(a) The Contractor, under the Assignment of Claims Act, as amended, 31 U.S.C. 3727, 41 U.S.C. 15 (hereafter referred to as "the Act"), may assign its rights to be paid amounts due or to become due as a result of the performance of this contract to a bank, trust company, or other financing institution, including any Federal lending agency. The assignee under such an assignment may thereafter further assign or reassign its right under the original assignment to any type of financing institution described in the preceding sentence.

(b) Any assignment or reassignment authorized under the Act and this clause shall cover all unpaid amounts payable under this contract, and shall not be made to more than one party, except that an assignment or reassignment may be made to one party as agent or trustee for two or more parties participating in the financing of this contract.

(c) The Contractor shall not furnish or disclose to any assignee under this contract any classified document (including this contract) or information related to work under this contract until the Contracting Officer authorizes such action in writing.

52.232-27 PROMPT PAYMENT FOR CONSTRUCTION CONTRACTS (JUN 1997)

Notwithstanding any other payment terms in this contract, the Government will make invoice payments and contract financing payments under the terms and conditions specified in this clause. Payment shall be considered as being made on the day a check is dated or the date of an electronic funds transfer. Definitions of pertinent terms are set forth in section 32.902 of the Federal Acquisition Regulation. All days referred to in this clause are calendar days, unless otherwise specified. (However, see subparagraph (a)(3) concerning payments due on Saturdays, Sundays, and legal holidays.)

(a) Invoice payments. (1) Types of invoice payments. For purposes of this clause, there are several types of invoice payments that may occur under this contract, as follows:

(i) Progress payments, if provided for elsewhere in this contract, based on Contracting Officer approval of the estimated amount and value of work or services performed, including payments for reaching milestones in any project:

(A) The due date for making such payments shall be 14 days after receipt of the payment request by the designated billing office. If the designated billing office fails to annotate the payment request with the actual date of receipt at the time of receipt, the payment due date shall be the 14th day after the date of the Contractor's payment request, provided a proper payment request is received and there is no disagreement over quantity, quality, or Contractor compliance with contract requirements.

(B) The due date for payment of any amounts retained by the Contracting Officer in accordance with the clause at 52.232-5, Payments Under Fixed-Price Construction Contracts, shall be as specified in the contract or, if not specified, 30 days after approval for release to the Contractor by the Contracting Officer.

(ii) Final payments based on completion and acceptance of all work and presentation of release of all claims against the Government arising by virtue of the contract, and payments for partial deliveries that have been accepted by the Government (e.g., each separate building, public work, or other division of the contract for which the price is stated separately in the contract):

(A) The due date for making such payments shall be either the 30th day after receipt by the designated billing office of a proper invoice from the Contractor, or the 30th day after Government acceptance of the work or services completed by the Contractor, whichever is later. If the designated billing office fails to annotate the invoice with the date of actual receipt at the time of receipt, the invoice payment due date shall be the 30th day after the date of the Contractor's invoice, provided a proper invoice is received and there is no disagreement over quantity, quality, or Contractor compliance with contract requirements.

(B) On a final invoice where the payment amount is subject to contract settlement actions (e.g., release of claims), acceptance shall be deemed to have occurred on the effective date of the contract settlement.

(2) Contractor's invoice. The Contractor shall prepare and submit invoices to the designated billing office specified in the contract. A proper invoice must include the items listed in subdivisions (a)(2)(i) through (a)(2)(ix) of this clause. If the invoice does not comply with these requirements, it shall be returned within 7 days after the date the designated billing office received the invoice, with a statement of the reasons why it is not a proper invoice. Untimely notification will be taken into account in computing any interest penalty owed the Contractor in the manner described in subparagraph (a)(4) of this clause.

(i) Name and address of the Contractor.

(ii) Invoice date. (The Contractor is encouraged to date invoices as close as possible to the date of mailing or transmission.)

(iii) Contract number or other authorization for work or services performed (including order number and contract line item number).

(iv) Description of work or services performed.

(v) Delivery and payment terms (e.g., prompt payment discount terms).

(vi) Name and address of Contractor official to whom payment is to be sent (must be the same as that in the contract or in a proper notice of assignment).

(vii) Name (where practicable), title, phone number, and mailing address of person to be notified in the event of a defective invoice.

(viii) For payments described in subdivision (a)(1)(i) of this clause, substantiation of the amounts requested and certification in accordance with the requirements of the clause at 52.232-5, Payments Under Fixed-Price Construction Contracts.

(ix) Any other information or documentation required by the contract.

(x) While not required, the Contractor is strongly encouraged to assign an identification number to each invoice.

(3) Interest penalty. An interest penalty shall be paid automatically by the designated payment office, without request from the Contractor, if payment is not made by the due date and the conditions listed in subdivisions (a)(3)(i) through (a)(3)(iii) of this clause are met, if applicable. However, when the due date falls on a Saturday, Sunday, or legal holiday when Federal Government offices are closed and Government business is not expected to be conducted, payment may be made on the following business day without incurring a late payment interest penalty.

(i) A proper invoice was received by the designated billing office.

(ii) A receiving report or other Government documentation authorizing payment was processed and there was no disagreement over quantity, quality, Contractor compliance with any contract term or condition, or requested progress payment amount.

(iii) In the case of a final invoice for any balance of funds due the Contractor for work or services performed, the amount was not subject to further contract settlement actions between the Government and the Contractor.

(4) Computing penalty amount. The interest penalty shall be at the rate established by the Secretary of the Treasury under section 12 of the Contract Disputes Act of 1978 (41 U.S.C. 611) that is in effect on the day after the due date, except where the interest penalty is prescribed by other governmental authority (e.g., tariffs). This rate is referred to as the "Renegotiation Board Interest Rate," and it is published in the Federal Register semiannually on or about January 1 and July 1. The interest penalty shall accrue daily on the invoice principal payment amount approved by the Government until the payment date of such approved principal amount; and will be compounded in 30-day increments inclusive from the first day after the due date through the payment date. That is, interest accrued at the end of any 30-day period will be added to the approved invoice principal payment amount and will be subject to interest penalties if not paid in the succeeding 30-day period. If the designated billing office failed to notify the Contractor of a defective invoice within the periods prescribed in subparagraph (a)(2) of this clause, the due date on the corrected invoice will be adjusted by subtracting from such date the number of days taken beyond the prescribed notification of defects period. Any interest penalty owed the Contractor will be based on this adjusted due date. Adjustments will be made by the designated payment office for errors in calculating interest penalties.

(i) For the sole purpose of computing an interest penalty that might be due the Contractor for payments described in subdivision (a)(1)(ii) of this clause, Government acceptance or approval shall be deemed to have occurred constructively on the 7th day after the Contractor has completed the work or services in accordance with the terms and conditions of the contract. In the event that actual acceptance or approval occurs within the constructive acceptance or approval period, the determination of an interest penalty shall be based on the actual date of acceptance or approval. Constructive acceptance or constructive approval requirements do not apply if there is a disagreement over quantity, quality, or Contractor compliance with a contract provision. These requirements also do not compel Government officials to accept work or services, approve Contractor estimates, perform contract administration functions, or make payment prior to fulfilling their responsibilities.

(ii) The following periods of time will not be included in the determination of an interest penalty:

(A) The period taken to notify the Contractor of defects in invoices submitted to the Government, but this may not exceed 7 days.

(B) The period between the defects notice and resubmission of the corrected invoice by the Contractor.

(C) For incorrect electronic funds transfer (EFT) information, in accordance with the EFT clause of this contract.

(iii) Interest penalties will not continue to accrue after the filing of a claim for such penalties under the clause at 52.233-1, Disputes, or for more than 1 year. Interest penalties of less than $1 need not be paid.

(iv) Interest penalties are not required on payment delays due to disagreement between the Government and the Contractor over the payment amount or other issues involving contract compliance, or on amounts temporarily withheld or retained in accordance with the terms of the contract. Claims involving disputes, and any interest that may be payable, will be resolved in accordance with the clause at 52.233-1, Disputes.

(5) Prompt payment discounts. An interest penalty also shall be paid automatically by the designated

payment office, without request from the Contractor, if a discount for prompt payment is taken improperly. The interest penalty will be calculated on the amount of discount taken for the period beginning with the first day after the end of the discount period through the date when the Contractor is paid.

(6) Additional interest penalty. (i) If this contract was awarded on or after October 1, 1989, a penalty amount, calculated in accordance with subdivision (a)(6)(iii) of this clause, shall be paid in addition to the interest penalty amount if the Contractor--

(A) Is owed an interest penalty of $1 or more;

(B) Is not paid the interest penalty within 10 days after the date the invoice amount is paid; and

(C) Makes a written demand to the designated payment office for additional penalty payment, in accordance with subdivision (a)(6)(ii) of this clause, postmarked not later than 40 days after the date the invoice amount is paid.

(ii)(A) Contractors shall support written demands for additional penalty payments with the following data. No additional data shall be required. Contractors shall--

(1) Specifically assert that late payment interest is due under a specific invoice, and request payment of all overdue late payment interest penalty and such additional penalty as may be required;

(2) Attach a copy of the invoice on which the unpaid late payment interest was due; and

(3) State that payment of the principal has been received, including the date of receipt.

(B) Demands must be postmarked on or before the 40th day after payment was made, except that--

(1) If the postmark is illegible or nonexistent, the demand must have been received and annotated with the date of receipt by the designated payment office on or before the 40th day after payment was made; or

(2) If the postmark is illegible or nonexistent and the designated payment office fails to make the required annotation, the demand's validity will be determined by the date the Contractor has placed on the demand; provided such date is no later than the 40th day after payment was made.

(iii)(A) The additional penalty shall be equal to 100 percent of any original late payment interest penalty, except--

(1) The additional penalty shall not exceed $5,000;

(2) The additional penalty shall never be less than $25; and

(3) No additional penalty is owed if the amount of the underlying interest penalty is less than $1.

(B) If the interest penalty ceases to accrue in accordance with the limits stated in subdivision (a)(4)(iii) of this clause, the amount of the additional penalty shall be calculated on the amount of interest penalty that would have accrued in the absence of these limits, subject to the overall limits on the additional penalty specified in subdivision (a)(6)(iii)(A) of this clause.

(C) For determining the maximum and minimum additional penalties, the test shall be the interest penalty due on each separate payment made for each separate contract. The maximum and minimum additional penalty shall not be based upon individual invoices unless the invoices are paid separately. Where payments are consolidated for disbursing purposes, the maximum and minimum additional penalty determination shall be made separately for each contract therein.

(D) The additional penalty does not apply to payments regulated by other Government regulations (e.g.,

payments under utility contracts subject to tariffs and regulation).

(b) Contract financing payments. (1) Due dates for recurring financing payments. If this contract provides for contract financing, requests for payment shall be submitted to the designated billing office as specified in this contract or as directed by the Contracting Officer. Contract financing payments shall be made on the [insert day as prescribed by Agency head; if not prescribed, insert 30th day] day after receipt of a proper contract financing request by the designated billing office. In the event that an audit or other review of a specific financing request is required to ensure compliance with the terms and conditions of the contract, the designated payment office is not compelled to make payment by the due date specified.

(2) Due dates for other contract financing. For advance payments, loans, or other arrangements that do not involve recurring submissions of contract financing requests, payment shall be made in accordance with the corresponding contract terms or as directed by the Contracting Officer.

(3) Interest penalty not applicable. Contract financing payments shall not be assessed an interest penalty for payment delays.

(c) Subcontract clause requirements. The Contractor shall include in each subcontract for property or services (including a material supplier) for the purpose of performing this contract the following:

(1) Prompt payment for subcontractors. A payment clause that obligates the Contractor to pay the subcontractor for satisfactory performance under its subcontract not later than 7 days from receipt of payment out of such amounts as are paid to the Contractor under this contract.

(2) Interest for subcontractors. An interest penalty clause that obligates the Contractor to pay to the subcontractor an interest penalty for each payment not made in accordance with the payment clause--

(i) For the period beginning on the day after the required payment date and ending on the date on which payment of the amount due is made; and

(ii) Computed at the rate of interest established by the Secretary of the Treasury, and published in the Federal Register, for interest payments under section 12 of the Contract Disputes Act of 1978 (41 U.S.C. 611) in effect at the time the Contractor accrues the obligation to pay an interest penalty.

(3) Subcontractor clause flowdown. A clause requiring each subcontractor to include a payment clause and an interest penalty clause conforming to the standards set forth in subparagraphs (c)(1) and (c)(2) of this clause in each of its subcontracts, and to require each of its subcontractors to include such clauses in their subcontracts with each lower-tier subcontractor or supplier.

(d) Subcontract clause interpretation. The clauses required by paragraph (c) of this clause shall not be construed to impair the right of the Contractor or a subcontractor at any tier to negotiate, and to include in their subcontract, provisions that--

(1) Retainage permitted. Permit the Contractor or a subcontractor to retain (without cause) a specified percentage of each progress payment otherwise due to a subcontractor for satisfactory performance under the subcontract without incurring any obligation to pay a late payment interest penalty, in accordance with terms and conditions agreed to by the parties to the subcontract, giving such recognition as the parties deem appropriate to the ability of a subcontractor to furnish a performance bond and a payment bond;

(2) Withholding permitted. Permit the Contractor or subcontractor to make a determination that part or all of the subcontractor's request for payment may be withheld in accordance with the subcontract agreement; and

(3) Withholding requirements. Permit such withholding without incurring any obligation to pay a late payment penalty if--

(i) A notice conforming to the standards of paragraph (g) of this clause previously has been furnished to the subcontractor; and

(ii) A copy of any notice issued by a Contractor pursuant to subdivision (d)(3)(i) of this clause has been furnished to the Contracting Officer.

(e) Subcontractor withholding procedures. If a Contractor, after making a request for payment to the Government but before making a payment to a subcontractor for the subcontractor's performance covered by the payment request, discovers that all or a portion of the payment otherwise due such subcontractor is subject to withholding from the subcontractor in accordance with the subcontract agreement, then the Contractor shall--

(1) Subcontractor notice. Furnish to the subcontractor a notice conforming to the standards of paragraph (g) of this clause as soon as practicable upon ascertaining the cause giving rise to a withholding, but prior to the due date for subcontractor payment;

(2) Contracting Officer notice. Furnish to the Contracting Officer, as soon as practicable, a copy of the notice furnished to the subcontractor pursuant to subparagraph (e)(1) of this clause;

(3) Subcontractor progress payment reduction. Reduce the subcontractor's progress payment by an amount not to exceed the amount specified in the notice of withholding furnished under subparagraph (e)(1) of this clause;

(4) Subsequent subcontractor payment. Pay the subcontractor as soon as practicable after the correction of the identified subcontract performance deficiency, and--

(i) Make such payment within--

(A) Seven days after correction of the identified subcontract performance deficiency (unless the funds therefor must be recovered from the Government because of a reduction under subdivision (e)(5)(i)) of this clause; or

(B) Seven days after the Contractor recovers such funds from the Government; or

(ii) Incur an obligation to pay a late payment interest penalty computed at the rate of interest established by the Secretary of the Treasury, and published in the Federal Register, for interest payments under section 12 of the Contracts Disputes Act of 1978 (41 U.S.C. 611) in effect at the time the Contractor accrues the obligation to pay an interest penalty;

(5) Notice to Contracting Officer. Notify the Contracting Officer upon--

(i) Reduction of the amount of any subsequent certified application for payment; or

(ii) Payment to the subcontractor of any withheld amounts of a progress payment, specifying--

(A) The amounts withheld under subparagraph (e)(1) of this clause; and

(B) The dates that such withholding began and ended; and

(6) Interest to Government. Be obligated to pay to the Government an amount equal to interest on the withheld payments (computed in the manner provided in 31 U.S.C. 3903(c)(1)), from the 8th day after receipt of the withheld amounts from the Government until--

(i) The day the identified subcontractor performance deficiency is corrected; or

(ii) The date that any subsequent payment is reduced under subdivision (e)(5)(i) of this clause.

(f) Third-party deficiency reports. (1) Withholding from subcontractor. If a Contractor, after making payment to a first-tier subcontractor, receives from a supplier or subcontractor of the first-tier subcontractor (hereafter referred to as a "second-tier subcontractor") a written notice in accordance with section 2 of the Act of August 24, 1935 (40 U.S.C. 270b, Miller Act), asserting a deficiency in such first-tier subcontractor's performance under the contract for which the Contractor may be ultimately liable, and the Contractor determines that all or a portion of future payments otherwise due such first-tier subcontractor is subject to withholding in accordance with the subcontract agreement, the Contractor may, without incurring an obligation to pay an interest penalty under subparagraph (e)(6) of this clause--

(i) Furnish to the first-tier subcontractor a notice conforming to the standards of paragraph (g) of this clause as soon as practicable upon making such determination; and

(ii) Withhold from the first-tier subcontractor's next available progress payment or payments an amount not to exceed the amount specified in the notice of withholding furnished under subdivision (f)(1)(i) of this clause.

(2) Subsequent payment or interest charge. As soon as practicable, but not later than 7 days after receipt of satisfactory written notification that the identified subcontract performance deficiency has been corrected, the Contractor shall--

(i) Pay the amount withheld under subdivision (f)(1)(ii) of this clause to such first-tier subcontractor; or

(ii) Incur an obligation to pay a late payment interest penalty to such first-tier subcontractor computed at the rate of interest established by the Secretary of the Treasury, and published in the Federal Register, for interest payments under section 12 of the Contracts Disputes Act of 1978 (41 U.S.C. 611) in effect at the time the Contractor accrues the obligation to pay an interest penalty.

(g) Written notice of subcontractor withholding. A written notice of any withholding shall be issued to a subcontractor (with a copy to the Contracting Officer of any such notice issued by the Contractor), specifying--

(1) The amount to be withheld;

(2) The specific causes for the withholding under the terms of the subcontract; and

(3) The remedial actions to be taken by the subcontractor in order to receive payment of the amounts withheld.

(h) Subcontractor payment entitlement. The Contractor may not request payment from the Government of any amount withheld or retained in accordance with paragraph (d) of this clause until such time as the Contractor has determined and certified to the Contracting Officer that the subcontractor is entitled to the payment of such amount.

(i) Prime-subcontractor disputes. A dispute between the Contractor and subcontractor relating to the amount or entitlement of a subcontractor to a payment or a late payment interest penalty under a clause included in the subcontract pursuant to paragraph (c) of this clause does not constitute a dispute to which the United States is a party. The United States may not be interpleaded in any judicial or administrative proceeding involving such a dispute.

(j) Preservation of prime-subcontractor rights. Except as provided in paragraph (i) of this clause, this clause shall not limit or impair any contractual, administrative, or judicial remedies otherwise available to the Contractor or a subcontractor in the event of a dispute involving late payment or nonpayment by the Contractor or deficient subcontract performance or nonperformance by a subcontractor.

(k) Non-recourse for prime contractor interest penalty. The Contractor's obligation to pay an interest

penalty to a subcontractor pursuant to the clauses included in a subcontract under paragraph (c) of this clause shall not be construed to be an obligation of the United States for such interest penalty. A cost-reimbursement claim may not include any amount for reimbursement of such interest penalty.

52.232-33 PAYMENT BY ELECTRONIC FUNDS TRANSFER— CENTRAL CONTRACTOR REGISTRATION (MAY 1999)

(a) Method of payment. (1) All payments by the Government under this contract shall be made by electronic funds transfer (EFT), except as provided in paragraph (a)(2) of this clause. As used in this clause, the term ``EFT'' refers to the funds transfer and may also include the payment information transfer.

(2) In the event the Government is unable to release one or more payments by EFT, the Contractor agrees to either--

(i) Accept payment by check or some other mutually agreeable method of payment; or

(ii) Request the Government to extend the payment due date until such time as the Government can make payment by EFT (but see paragraph (d) of this clause).

(b) Contractor's EFT information. The Government shall make payment to the Contractor using the EFT information contained in the Central Contractor Registration (CCR) database. In the event that the EFT information changes, the Contractor shall be responsible for providing the updated information to the CCR database.

(c) Mechanisms for EFT payment. The Government may make payment by EFT through either the Automated Clearing House (ACH) network, subject to the rules of the National Automated Clearing House Association, or the Fedwire Transfer System. The rules governing Federal payments through the ACH are contained in 31 CFR part 210.

(d) Suspension of payment. If the Contractor's EFT information in the CCR database is incorrect, then the Government need not make payment to the Contractor under this contract until correct EFT information is entered into the CCR database; and any invoice or contract financing request shall be deemed not to be a proper invoice for the purpose of prompt payment under this contract. The prompt payment terms of the contract regarding notice of an improper invoice and delays in accrual of interest penalties apply.

(e) Contractor EFT arrangements. If the Contractor has identified multiple payment receiving points (i.e., more than one remittance address and/or EFT information set) in the CCR database, and the Contractor has not notified the Government of the payment receiving point applicable to this contract, the Government shall make payment to the first payment receiving point (EFT information set or remittance address as applicable) listed in the CCR database.

(f) Liability for uncompleted or erroneous transfers. (1) If an uncompleted or erroneous transfer occurs because the Government used the Contractor's EFT information incorrectly, the Government remains responsible for--

(i) Making a correct payment;

(ii) Paying any prompt payment penalty due; and

(iii) Recovering any erroneously directed funds.

(2) If an uncompleted or erroneous transfer occurs because the Contractor's EFT information was incorrect, or was revised within 30 days of Government release of the EFT payment transaction instruction to the Federal Reserve System, and--

(i) If the funds are no longer under the control of the payment office, the Government is deemed to have made payment and the Contractor is responsible for recovery of any erroneously directed funds; or

(ii) If the funds remain under the control of the payment office, the Government shall not make payment, and the provisions of paragraph (d) of this clause shall apply.

(g) EFT and prompt payment. A payment shall be deemed to have been made in a timely manner in accordance with the prompt payment terms of this contract if, in the EFT payment transaction instruction released to the Federal Reserve System, the date specified for settlement of the payment is on or before the prompt payment due date, provided the specified payment date is a valid date under the rules of the Federal Reserve System.

(h) EFT and assignment of claims. If the Contractor assigns the proceeds of this contract as provided for in the assignment of claims terms of this contract, the Contractor shall require as a condition of any such assignment, that the assignee shall register in the CCR database and shall be paid by EFT in accordance with the terms of this clause. In all respects, the requirements of this clause shall apply to the assignee as if it were the Contractor. EFT information that shows the ultimate recipient of the transfer to be other than the Contractor, in the absence of a proper assignment of claims acceptable to the Government, is incorrect EFT information within the meaning of paragraph (d) of this clause.

(i) Liability for change of EFT information by financial agent. The Government is not liable for errors resulting from changes to EFT information made by the Contractor's financial agent.

(j) Payment information. The payment or disbursing office shall forward to the Contractor available payment information that is suitable for transmission as of the date of release of the EFT instruction to the Federal Reserve System. The Government may request the Contractor to designate a desired format and method(s) for delivery of payment information from a list of formats and methods the payment office is capable of executing. However, the Government does not guarantee that any particular format or method of delivery is available at any particular payment office and retains the latitude to use the format and delivery method most convenient to the Government. If the Government makes payment by check in accordance with paragraph (a) of this clause, the Government shall mail the payment information to the remittance address contained in the CCR database.

(End of Clause)

52.233-1 DISPUTES. (DEC 1998)

(a) This contract is subject to the Contract Disputes Act of 1978, as amended (41 U.S.C. 601-613).

(b) Except as provided in the Act, all disputes arising under or relating to this contract shall be resolved under this clause.

(c) "Claim," as used in this clause, means a written demand or written assertion by one of the contracting parties seeking, as a matter of right, the payment of money in a sum certain, the adjustment or interpretation of contract terms, or other relief arising under or relating to this contract. A claim arising under a contract, unlike a claim relating to that contract, is a claim that can be resolved under a contract clause that provides for the relief sought by the claimant. However, a written demand or written assertion by the Contractor seeking the payment of money exceeding $100,000 is not a claim under the Act until certified as required by subparagraph (d)(2) of this clause. A voucher, invoice, or other routine request for payment that is not in dispute when submitted is not a claim under the Act. The submission may be converted to a claim under the Act, by complying with the submission and certification requirements of this clause, if it is disputed either as to liability or amount or is not acted upon in a reasonable time.

(d)(1) A claim by the Contractor shall be made in writing and, unless otherwise stated in this contract, submitted within 6 years after accrual of the claim to the Contracting Officer for a written decision. A claim by the Government against the Contractor shall be subject to a written decision by the Contracting Officer.

(2)(i) The contractors shall provide the certification specified in subparagraph (d)(2)(iii) of this clause when submitting any claim -

(A) Exceeding $100,000; or

(B) Regardless of the amount claimed, when using -

(1) Arbitration conducted pursuant to 5 U.S.C. 575-580; or

(2) Any other alternative means of dispute resolution (ADR) technique that the agency elects to handle in accordance with the Administrative Dispute Resolution Act (ADRA).

(ii) The certification requirement does not apply to issues in controversy that have not been submitted as all or part of a claim.

(iii) The certification shall state as follows: "I certify that the claim is made in good faith; that the supporting data are accurate and complete to the best of my knowledge and belief; that the amount requested accurately reflects the contract adjustment for which the Contractor believes the Government is liable; and that I am duly authorized to certify the claim on behalf of the Contractor.

(3) The certification may be executed by any person duly authorized to bind the Contractor with respect to the claim.

(e) For Contractor claims of $100,000 or less, the Contracting Officer must, if requested in writing by the Contractor, render a decision within 60 days of the request. For Contractor-certified claims over $100,000, the Contracting Officer must, within 60 days, decide the claim or notify the Contractor of the date by which the decision will be made.

(f) The Contracting Officer's decision shall be final unless the Contractor appeals or files a suit as provided in the Act.

(g) If the claim by the Contractor is submitted to the Contracting Officer or a claim by the Government is presented to the Contractor, the parties, by mutual consent, may agree to use alternative disput resolution (ADR). If the Contractor refuses an offer for ADR, the Contractor shall inform the Contracting Officer, in writing, of the Contractor's specific reasons for rejecting the request.

(h) The Government shall pay interest on the amount found due and unpaid from (1) the date the Contracting Officer receives the claim (certified, if required); or (2) the date that payment otherwise would be due, if that date is later, until the date of payment. With regard to claims having defective certifications, as defined in (FAR) 48 CFR 33.201, interest shall be paid from the date that the Contracting Officer initially receives the claim. Simple interest on claims shall be paid at the rate, fixed by the Secretary of the Treasury as provided in the Act, which is applicable to the period during which the Contracting Officer receives the claim and then at the rate applicable for each 6-month period as fixed by the Treasury Secretary during the pendency of the claim.

(i) The Contractor shall proceed diligently with performance of this contract, pending final resolution of any request for relief, claim, appeal, or action arising under the contract, and comply with any decision of the Contracting Officer.

(End of clause)

52.233-3 PROTEST AFTER AWARD (AUG. 1996)

(a) Upon receipt of a notice of protest (as defined in FAR 33.101) or a determination that a protest is likely (see FAR 33.102(d)), the Contracting Officer may, by written order to the Contractor, direct the Contractor

to stop performance of the work called for by this contract. The order shall be specifically identified as a stop-work order issued under this clause. Upon receipt of the order, the Contractor shall immediately comply with its terms and take all reasonable steps to minimize the incurrence of costs allocable to the work covered by the order during the period of work stoppage. Upon receipt of the final decision in the protest, the Contracting Officer shall either--

(1) Cancel the stop-work order; or

(2) Terminate the work covered by the order as provided in the Default, or the Termination for Convenience of the Government, clause of this contract.

(b) If a stop-work order issued under this clause is canceled either before or after a final decision in the protest, the Contractor shall resume work. The Contracting Officer shall make an equitable adjustment in the delivery schedule or contract price, or both, and the contract shall be modified, in writing, accordingly, if--

(1) The stop-work order results in an increase in the time required for, or in the Contractor's cost properly allocable to, the performance of any part of this contract; and

(2) The Contractor asserts its right to an adjustment within 30 days after the end of the period of work stoppage; provided, that if the Contracting Officer decides the facts justify the action, the Contracting Officer may receive and act upon a proposal at any time before final payment under this contract.

(c) If a stop-work order is not canceled and the work covered by the order is terminated for the convenience of the Government, the Contracting Officer shall allow reasonable costs resulting from the stop-work order in arriving at the termination settlement.

(d) If a stop-work order is not canceled and the work covered by the order is terminated for default, the Contracting Officer shall allow, by equitable adjustment or otherwise, reasonable costs resulting from the stop-work order.

(e) The Government's rights to terminate this contract at any time are not affected by action taken under this clause.

(f) If, as the result of the Contractor's intentional or negligent misstatement, misrepresentation, or miscertification, a protest related to this contract is sustained, and the Government pays costs, as provided in FAR 33.102(b)(2) or 33.104(h)(1), the Government may require the Contractor to reimburse the Government the amount of such costs. In addition to any other remedy available, and pursuant to the requirements of Subpart 32.6, the Government may collect this debt by offsetting the amount against any payment due the Contractor under any contract between the Contractor and the Government.

52.236-2 DIFFERING SITE CONDITIONS (APR 1984)

As prescribed in 36.502, insert the following clause in solicitations and contracts when a fixed-price construction contract or a fixed-price dismantling, demolition, or removal of improvements contract is contemplated and the contract amount is expected to exceed the small purchase limitation. The Contracting Officer may insert the clause in solicitations and contracts when a fixed-price construction or a fixed-price contract for dismantling, demolition, or removal of improvements is contemplated and the contract amount is expected to be within the small purchase limitation.

(a) The Contractor shall promptly, and before the conditions are disturbed, give a written notice to the Contracting Officer of

(1) subsurface or latent physical conditions at the site which differ materially from those indicated in this

contract, or

(2) unknown physical conditions at the site, of an unusual nature, which differ materially from those ordinarily encountered and generally recognized as inhering in work of the character provided for in the contract.

(b) The Contracting Officer shall investigate the site conditions promptly after receiving the notice. If the conditions do materially so differ and cause an increase or decrease in the Contractor's cost of, or the time required for, performing any part of the work under this contract, whether or not changed as a result of the conditions, an equitable adjustment shall be made under this clause and the contract modified in writing accordingly.

(c) No request by the Contractor for an equitable adjustment to the contract under this clause shall be allowed, unless the Contractor has given the written notice required; provided, that the time prescribed in (a) above for giving written notice may be extended by the Contracting Officer.

(d) No request by the Contractor for an equitable adjustment to the contract for differing site conditions shall be allowed if made after final payment under this contract.

52.236-3 SITE INVESTIGATION AND CONDITIONS AFFECTING THE WORK (APR 1984)

(a) The Contractor acknowledges that it has taken steps reasonably necessary to ascertain the nature and location of the work, and that it has investigated and satisfied itself as to the general and local conditions which can affect the work or its cost, including but not limited to

(1) conditions bearing upon transportation, disposal, handling, and storage of materials;

(2) the availability of labor, water, electric power, and roads;

(3) uncertainties of weather, river stages, tides, or similar physical conditions at the site;

(4) the conformation and conditions of the ground; and (5) the character of equipment and facilities needed preliminary to and during work performance. The Contractor also acknowledges that it has satisfied itself as to the character, quality, and quantity of surface and subsurface materials or obstacles to be encountered insofar as this information is reasonably ascertainable from an inspection of the site, including all exploratory work done by the Government, as well as from the drawings and specifications made a part of this contract. Any failure of the Contractor to take the actions described and acknowledged in this paragraph will not relieve the Contractor from responsibility for estimating properly the difficulty and cost of successfully performing the work, or for proceeding to successfully perform the work without additional expense to the Government.

(b) The Government assumes no responsibility for any conclusions or interpretations made by the Contractor based on the information made available by the Government. Nor does the Government assume responsibility for any understanding reached or representation made concerning conditions which can affect the work by any of its officers or agents before the execution of this contract, unless that understanding or representation is expressly stated in this contract.

52.236-5 MATERIAL AND WORKMANSHIP (APR 1984)

(a) All equipment, material, and articles incorporated into the work covered by this contract shall be new and of the most suitable grade for the purpose intended, unless otherwise specifically provided in this contract. References in the specifications to equipment, material, articles, or patented processes by trade name, make, or catalog number, shall be regarded as establishing a standard of quality and shall not be construed as limiting competition. The Contractor may, at its option, use any equipment, material, article,

or process that, in the judgment of the Contracting Officer, is equal to that named in the specifications, unless otherwise specifically provided in this contract.

(b) The Contractor shall obtain the Contracting Officer's approval of the machinery and mechanical and other equipment to be incorporated into the work. When requesting approval, the Contractor shall furnish to the Contracting Officer the name of the manufacturer, the model number, and other information concerning the performance, capacity, nature, and rating of the machinery and mechanical and other equipment. When required by this contract or by the Contracting Officer, the Contractor shall also obtain the Contracting Officer's approval of the material or articles which the Contractor contemplates incorporating into the work. When requesting approval, the Contractor shall provide full information concerning the material or articles. When directed to do so, the Contractor shall submit samples for approval at the Contractor's expense, with all shipping charges prepaid. Machinery, equipment, material, and articles that do not have the required approval shall be installed or used at the risk of subsequent rejection.

(c) All work under this contract shall be performed in a skillful and workmanlike manner. The Contracting Officer may require, in writing, that the Contractor remove from the work any employee the Contracting Officer deems incompetent, careless, or otherwise objectionable.

52.236-6 SUPERINTENDENCE BY THE CONTRACTOR (APR 1984)

At all times during performance of this contract and until the work is completed and accepted, the Contractor shall directly superintend the work or assign and have on the worksite a competent superintendent who is satisfactory to the Contracting Officer and has authority to act for the Contractor.

52.236-7 PERMITS AND RESPONSIBILITIES (NOV 1991)

The Contractor shall, without additional expense to the Government, be responsible for obtaining any necessary licenses and permits, and for complying with any Federal, State, and municipal laws, codes, and regulations applicable to the performance of the work. The Contractor shall also be responsible for all damages to persons or property that occur as a result of the Contractor's fault or negligence. The Contractor shall also be responsible for all materials delivered and work performed until completion and acceptance of the entire work, except for any completed unit of work which may have been accepted under the contract.

52.236-8 OTHER CONTRACTS (APR 1984)

The Government may undertake or award other contracts for additional work at or near the site of the work under this contract. The Contractor shall fully cooperate with the other contractors and with Government employees and shall carefully adapt scheduling and performing the work under this contract to accommodate the additional work, heeding any direction that may be provided by the Contracting Officer. The Contractor shall not commit or permit any act that will interfere with the performance of work by any other contractor or by Government employees.

52.236-9 PROTECTION OF EXISTING VEGETATION, STRUCTURES, EQUIPMENT, UTILITIES, AND IMPROVEMENTS (APR 1984)

(a) The Contractor shall preserve and protect all structures, equipment, and vegetation (such as trees, shrubs, and grass) on or adjacent to the work site, which are not to be removed and which do not unreasonably interfere with the work required under this contract. The Contractor shall only remove trees when specifically authorized to do so, and shall avoid damaging vegetation that will remain in place. If any limbs or branches of trees are broken during contract performance, or by the careless operation of equipment, or by workmen, the Contractor shall trim those limbs or branches with a clean cut and paint the

cut with a tree-pruning compound as directed by the Contracting Officer.

(b) The Contractor shall protect from damage all existing improvements and utilities

(1) at or near the work site, and

(2) on adjacent property of a third party, the locations of which are made known to or should be known by the Contractor. The Contractor shall repair any damage to those facilities, including those that are the property of a third party, resulting from failure to comply with the requirements of this contract or failure to exercise reasonable care in performing the work. If the Contractor fails or refuses to repair the damage promptly, the Contracting Officer may have the necessary work performed and charge the cost to the Contractor.

52.236-10 OPERATIONS AND STORAGE AREAS (APR 1984)

(a) The Contractor shall confine all operations (including storage of materials) on Government premises to areas authorized or approved by the Contracting Officer. The Contractor shall hold and save the Government, its officers and agents, free and harmless from liability of any nature occasioned by the Contractor's performance.

(b) Temporary buildings (e.g., storage sheds, shops, offices) and utilities may be erected by the Contractor only with the approval of the Contracting Officer and shall be built with labor and materials furnished by the Contractor without expense to the Government. The temporary buildings and utilities shall remain the property of the Contractor and shall be removed by the Contractor at its expense upon completion of the work. With the written consent of the Contracting Officer, the buildings and utilities may be abandoned and need not be removed.

(c) The Contractor shall, under regulations prescribed by the Contracting Officer, use only established roadways, or use temporary roadways constructed by the Contractor when and as authorized by the Contracting Officer. When materials are transported in prosecuting the work, vehicles shall not be loaded beyond the loading capacity recommended by the manufacturer of the vehicle or prescribed by any Federal, State, or local law or regulation. When it is necessary to cross curbs or sidewalks, the Contractor shall protect them from damage. The Contractor shall repair or pay for the repair of any damaged curbs, sidewalks, or roads.

52.236-11 USE AND POSSESSION PRIOR TO COMPLETION (APR 1984)

(a) The Government shall have the right to take possession of or use any completed or partially completed part of the work. Before taking possession of or using any work, the Contracting Officer shall furnish the Contractor a list of items of work remaining to be performed or corrected on those portions of the work that the Government intends to take possession of or use. However, failure of the Contracting Officer to list any item of work shall not relieve the Contractor of responsibility for complying with the terms of the contract. The Government's possession or use shall not be deemed an acceptance of any work under the contract.

(b) While the Government has such possession or use, the Contractor shall be relieved of the responsibility for the loss of or damage to the work resulting from the Government's possession or use, notwithstanding the terms of the clause in this contract entitled "Permits and Responsibilities." If prior possession or use by the Government delays the progress of the work or causes additional expense to the Contractor, an equitable adjustment shall be made in the contract price or the time of completion, and the contract shall be modified in writing accordingly.

52.236-12 CLEANING UP (APR 1984)

The Contractor shall at all times keep the work area, including storage areas, free from accumulations of waste materials. Before completing the work, the Contractor shall remove from the work and premises any rubbish, tools, scaffolding, equipment, and materials that are not the property of the Government. Upon completing the work, the Contractor shall leave the work area in a clean, neat, and orderly condition satisfactory to the Contracting Officer.

52.236-13 ACCIDENT PREVENTION (NOV 1991)

(a) The Contractor shall provide and maintain work environments and procedures which will

(1) safeguard the public and Government personnel, property, materials, supplies, and equipment exposed to Contractor operations and activities;

(2) avoid interruptions of Government operations and delays in project completion dates; and

(3) control costs in the performance of this contract.

(b) For these purposes on contracts for construction or dismantling, demolition, or removal of improvements, the Contractor shall-

(1) Provide appropriate safety barricades, signs, and signal lights;

(2) Comply with the standards issued by the Secretary of Labor at 29 CFR Part 1926 and 29 CFR Part 1910; and

(3) Ensure that any additional measures the Contracting Officer determines to be reasonably necessary for the purposes are taken.

(c) If this contract is for construction or dismantling, demolition or removal of improvements with any Department of Defense agency or component, the Contractor shall comply with all pertinent provisions of the latest version of U.S. Army Corps of Engineers Safety and Health Requirements Manual, EM 385-1-1, in effect on the date of the solicitation.

(d) Whenever the Contracting Officer becomes aware of any noncompliance with these requirements or any condition which poses a serious or imminent danger to the health or safety of the public or Government personnel, the Contracting Officer shall notify the Contractor orally, with written confirmation, and request immediate initiation of corrective action. This notice, when delivered to the Contractor or the Contractor's representative at the work site, shall be deemed sufficient notice of the noncompliance and that corrective action is required. After receiving the notice, the Contractor shall immediately take corrective action. If the Contractor fails or refuses to promptly take corrective action, the Contracting Officer may issue an order stopping all or part of the work until satisfactory corrective action has been taken. The Contractor shall not be entitled to any equitable adjustment of the contract price or extension of the performance schedule on any stop work order issued under this clause.

(e) The Contractor shall insert this clause, including this paragraph (e), with appropriate changes in the designation of the parties, in subcontracts.

52.236-15 SCHEDULES FOR CONSTRUCTION CONTRACTS (APR 1984)

(a) The Contractor shall, within five days after the work commences on the contract or another period of time determined by the Contracting Officer, prepare and submit to the Contracting Officer for approval three copies of a practicable schedule showing the order in which the Contractor proposes to perform the work, and the dates on which the Contractor contemplates starting and completing the several salient

features of the work (including acquiring materials, plant, and equipment). The schedule shall be in the form of a progress chart of suitable scale to indicate appropriately the percentage of work scheduled for completion by any given date during the period. If the Contractor fails to submit a schedule within the time prescribed, the Contracting Officer may withhold approval of progress payments until the Contractor submits the required schedule.

(b) The Contractor shall enter the actual progress on the chart as directed by the Contracting Officer, and upon doing so shall immediately deliver three copies of the annotated schedule to the Contracting Officer. If, in the opinion of the Contracting Officer, the Contractor falls behind the approved schedule, the Contractor shall take steps necessary to improve its progress, including those that may be required by the Contracting Officer, without additional cost to the Government. In this circumstance, the Contracting Officer may require the Contractor to increase the number of shifts, overtime operations, days of work, and/or the amount of construction plant, and to submit for approval any supplementary schedule or schedules in chart form as the Contracting Officer deems necessary to demonstrate how the approved rate of progress will be regained.

(c) Failure of the Contractor to comply with the requirements of the Contracting Officer under this clause shall be grounds for a determination by the Contracting Officer that the Contractor is not prosecuting the work with sufficient diligence to ensure completion within the time specified in the contract. Upon making this determination, the Contracting Officer may terminate the Contractor's right to proceed with the work, or any separable part of it, in accordance with the default terms of this contract.

52.236-17 LAYOUT OF WORK (APR 1984)

The Contractor shall lay out its work from Government established base lines and bench marks indicated on the drawings, and shall be responsible for all measurements in connection with the layout. The Contractor shall furnish, at its own expense, all stakes, templates, platforms, equipment, tools, materials, and labor required to lay out any part of the work. The Contractor shall be responsible for executing the work to the lines and grades that may be established or indicated by the Contracting Officer. The Contractor shall also be responsible for maintaining and preserving all stakes and other marks established by the Contracting Officer until authorized to remove them. If such marks are destroyed by the Contractor or through its negligence before their removal is authorized, the Contracting Officer may replace them and deduct the expense of the replacement from any amounts due or to become due to the Contractor.

52.236-21 SPECIFICATIONS AND DRAWINGS FOR CONSTRUCTION (FEB 1997)

(a) The Contractor shall keep on the work site a copy of the drawings and specifications and shall at all times give the Contracting Officer access thereto. Anything mentioned in the specifications and not shown on the drawings, or shown on the drawings and not mentioned in the specifications, shall be of like effect as if shown or mentioned in both. In case of difference between drawings and specifications, the specifications shall govern. In case of discrepancy in the figures, in the drawings, or in the specifications, the matter shall be promptly submitted to the Contracting Officer, who shall promptly make a determination in writing. Any adjustment by the Contractor without such a determination shall be at its own risk and expense. The Contracting Officer shall furnish from time to time such detailed drawings and other information as considered necessary, unless otherwise provided.

(b) Wherever in the specifications or upon the drawings the words "directed", "required", "ordered", "designated", "prescribed", or words of like import are used, it shall be understood that the "direction", "requirement", "order", "designation", or "prescription", of the Contracting Officer is intended and similarly the words "approved", "acceptable", "satisfactory", or words of like import shall mean "approved by," or "acceptable to", or "satisfactory to" the Contracting Officer, unless otherwise expressly stated.

(c) Where "as shown," as indicated", "as detailed", or words of similar import are used, it shall be understood that the reference is made to the drawings accompanying this contract unless stated otherwise.

The word "provided" as used herein shall be understood to mean "provide complete in place," that is "furnished and installed".

(d) Shop drawings means drawings, submitted to the Government by the Contractor, subcontractor, or any lower tier subcontractor pursuant to a construction contract, showing in detail (1) the proposed fabrication and assembly of structural elements, and (2) the installation (i.e., fit, and attachment details) of materials or equipment. It includes drawings, diagrams, layouts, schematics, descriptive literature, illustrations, schedules, performance and test data, and similar materials furnished by the contractor to explain in detail specific portions of the work required by the contract. The Government may duplicate, use, and disclose in any manner and for any purpose shop drawings delivered under this contract.

(e) If this contract requires shop drawings, the Contractor shall coordinate all such drawings, and review them for accuracy, completeness, and compliance with contract requirements and shall indicate its approval thereon as evidence of such coordination and review. Shop drawings submitted to the Contracting Officer without evidence of the Contractor's approval may be returned for resubmission. The Contracting Officer will indicate an approval or disapproval of the shop drawings and if not approved as submitted shall indicate the Government's reasons therefor. Any work done before such approval shall be at the Contractor's risk. Approval by the Contracting Officer shall not relieve the Contractor from responsibility for any errors or omissions in such drawings, nor from responsibility for complying with the requirements of this contract, except with respect to variations described and approved in accordance with (f) below.

(f) If shop drawings show variations from the contract requirements, the Contractor shall describe such variations in writing, separate from the drawings, at the time of submission. If the Contracting Officer approves any such variation, the Contracting Officer shall issue an appropriate contract modification, except that, if the variation is minor or does not involve a change in price or in time of performance, a modification need not be issued.

(g) The Contractor shall submit to the Contracting Officer for approval four copies (unless otherwise indicated) of all shop drawings as called for under the various headings of these specifications. Three sets (unless otherwise indicated) of all shop drawings, will be retained by the Contracting Officer and one set will be returned to the Contractor.

52.236-26 PRECONSTRUCTION CONFERENCE (FEB 1995)

If the Contracting Officer decides to conduct a preconstruction conference, the successful offeror will be notified and will be required to attend. The Contracting Officer's notification will include specific details regarding the date, time, and location of the conference, any need for attendance by subcontractors, and information regarding the items to be discussed.

52.242-13 BANKRUPTCY. (JUL 1995)

In the event the Contractor enters into proceedings relating to bankruptcy, whether voluntary or involuntary, the Contractor agrees to furnish, by certified mail or electronic commerce method authorized by the contract, written notification of the bankruptcy to the Contracting Officer responsible for administering the contract. This notification shall be furnished within five days of the initiation of the proceedings relating to bankruptcy filing. This notification shall include the date on which the bankruptcy petition was filed, the identity of the court in which the bankruptcy petition was filed, and a listing of Government contract numbers and contracting offices for all Government contracts against which final payment has not been made. This obligation remains in effect until final payment under this contract.

52.242-14 SUSPENSION OF WORK (APR 1984)

(a) The Contracting Officer may order the Contractor, in writing, to suspend, delay, or interrupt all or any part of the work of this contract for the period of time that the Contracting Officer determines appropriate for the convenience of the Government.

(b) If the performance of all or any part of the work is, for an unreasonable period of time, suspended, delayed, or interrupted (1) by an act of the Contracting Officer in the administration of this contract, or (2) by the Contracting Officer's failure to act within the time specified in this contract (or within a reasonable time if not specified), an adjustment shall be made for any increase in the cost of performance of this contract (excluding profit) necessarily caused by the unreasonable suspension, delay, or interruption, and the contract modified in writing accordingly. However, no adjustment shall be made under this clause for any suspension, delay, or interruption to the extent that performance would have been so suspended, delayed, or interrupted by any other cause, including the fault or negligence of the Contractor, or for which an equitable adjustment is provided for or excluded under any other term or condition of this contract. (c) A claim under this clause shall not be allowed (1) for any costs incurred more than 20 days before the Contractor shall have notified the Contracting Officer in writing of the act or failure to act involved (but this requirement shall not apply as to a claim resulting from a suspension order), and (2) unless the claim, in an amount stated, is asserted in writing as soon as practicable after the termination of the suspension, delay, or interruption, but not later than the date of final payment under the contract.

52.243-4 CHANGES (AUG 1987)

(a) The Contracting Officer may, at any time, without notice to the sureties, if any, by written order designated or indicated to be a change order, make changes in the work within the general scope of the contract, including changes--

(1) In the specifications (including drawings and designs);

(2) In the method or manner of performance of the work;

(3) In the Government-furnished facilities, equipment, materials, services, or site; or

(4) Directing acceleration in the performance of the work.

(b) Any other written or oral order (which, as used in this paragraph (b), includes direction, instruction, interpretation, or determination) from the Contracting Officer that causes a change shall be treated as a change order under this clause; provided, that the Contractor gives the Contracting Officer written notice stating

(1) the date, circumstances, and source of the order and

(2) that the Contractor regards the order as a change order.

(c) Except as provided in this clause, no order, statement, or conduct of the Contracting Officer shall be treated as a change under this clause or entitle the Contractor to an equitable adjustment.

(d) If any change under this clause causes an increase or decrease in the Contractor's cost of, or the time required for, the performance of any part of the work under this contract, whether or not changed by any such order, the Contracting Officer shall make an equitable adjustment and modify the contract in writing. However, except for an adjustment based on defective specifications, no adjustment for any change under paragraph (b) of this clause shall be made for any costs incurred more than 20 days before the Contractor gives written notice as required. In the case of defective specifications for which the Government is responsible, the equitable adjustment shall include any increased cost reasonably incurred by the Contractor in attempting to comply with the defective specifications.

(e) The Contractor must assert its right to an adjustment under this clause within 30 days after

(1) receipt of a written change order under paragraph (a) of this clause or (2) the furnishing of a written notice under paragraph (b) of this clause, by submitting to the Contracting Officer a written statement describing the general nature and amount of the proposal, unless this period is extended by the Government. The statement of proposal for adjustment may be included in the notice under paragraph (b) above.

(f) No proposal by the Contractor for an equitable adjustment shall be allowed if asserted after final payment under this contract.

52.246-12 INSPECTION OF CONSTRUCTION (AUG 1996)

(a) Definition. "Work" includes, but is not limited to, materials, workmanship, and manufacture and fabrication of components.

(b) The Contractor shall maintain an adequate inspection system and perform such inspections as will ensure that the work performed under the contract conforms to contract requirements. The Contractor shall maintain complete inspection records and make them available to the Government. All work shall be conducted under the general direction of the Contracting Officer and is subject to Government inspection and test at all places and at all reasonable times before acceptance to ensure strict compliance with the terms of the contract.

(c) Government inspections and tests are for the sole benefit of the Government and do not--

(1) Relieve the Contractor of responsibility for providing adequate quality control measures;

(2) Relieve the Contractor of responsibility for damage to or loss of the material before acceptance;

(3) Constitute or imply acceptance; or

(4) Affect the continuing rights of the Government after acceptance of the completed work under paragraph (i) of this section.

(d) The presence or absence of a Government inspector does not relieve the Contractor from any contract requirement, nor is the inspector authorized to change any term or condition of the specification without the Contracting Officer's written authorization.

(e) The Contractor shall promptly furnish, at no increase in contract price, all facilities, labor, and material reasonably needed for performing such safe and convenient inspections and tests as may be required by the Contracting Officer. The Government may charge to the Contractor any additional cost of inspection or test when work is not ready at the time specified by the Contractor for inspection or test, or when prior rejection makes reinspection or retest necessary. The Government shall perform all inspections and tests in a manner that will not unnecessarily delay the work. Special, full size, and performance tests shall be performed as described in the contract.

(f) The Contractor shall, without charge, replace or correct work found by the Government not to conform to contract requirements, unless in the public interest the Government consents to accept the work with an appropriate adjustment in contract price. The Contractor shall promptly segregate and remove rejected material from the premises.

(g) If the Contractor does not promptly replace or correct rejected work, the Government may (1) by contract or otherwise, replace or correct the work and charge the cost to the Contractor or (2) terminate for default the Contractor's right to proceed.

(h) If, before acceptance of the entire work, the Government decides to examine already completed work by removing it or tearing it out, the Contractor, on request, shall promptly furnish all necessary facilities, labor, and material. If the work is found to be defective or nonconforming in any material respect due to the fault of the Contractor or its subcontractors, the Contractor shall defray the expenses of the examination and of satisfactory reconstruction. However, if the work is found to meet contract requirements, the Contracting Officer shall make an equitable adjustment for the additional services involved in the examination and reconstruction, including, if completion of the work was thereby delayed, an extension of time.

(i) Unless otherwise specified in the contract, the Government shall accept, as promptly as practicable after completion and inspection, all work required by the contract or that portion of the work the Contracting Officer determines can be accepted separately. Acceptance shall be final and conclusive except for latent defects, fraud, gross mistakes amounting to fraud, or the Government's rights under any warranty or guarantee.

52.246-21 WARRANTY OF CONSTRUCTION (APR 1984)

(a) In addition to any other warranties in this contract, the Contractor warrants, except as provided in paragraph (i) of this clause, that work performed under this contract conforms to the contract requirements and is free of any defect in equipment, material, or design furnished, or workmanship performed by the Contractor or any subcontractor or supplier at any tier.

(b) This warranty shall continue for a period of 1 year from the date of final acceptance of the work. If the Government takes possession of any part of the work before final acceptance, this warranty shall continue for a period of 1 year from the date the Government takes possession.

(c) The Contractor shall remedy at the Contractor's expense any failure to conform, or any defect. In addition,the Contractor shall remedy at the Contractor's expense any damage to Governmentowned or controlled real or personal property, when that damage is the result of

(1) The Contractor's failure to conform to contract requirements; or

(2) Any defect of equipment, material, workmanship, or design furnished.

(d) The Contractor shall restore any work damaged in fulfilling the terms and conditions of this clause. The Contractor's warranty with respect to work repaired or replaced will run for 1 year from the date of repair or replacement.

(e) The Contracting Officer shall notify the Contractor, in writing, within a reasonable time after the discovery of any failure, defect, or damage.

(f) If the Contractor fails to remedy any failure, defect, or damage within a reasonable time after receipt of notice, the Government shall have the right to replace, repair, or otherwise remedy the failure, defect, or damage at the Contractor's expense.

(g) With respect to all warranties, express or implied, from subcontractors, manufacturers, or suppliers for work performed and materials furnished under this contract, the Contractor shall--

(1) Obtain all warranties that would be given in normal commercial practice;

(2) Require all warranties to be executed, in writing, for the benefit of the Government, if directed by the Contracting Officer; and

(3) Enforce all warranties for the benefit of the Government, if directed by the Contracting Officer.

(h) In the event the Contractor's warranty under paragraph (b) of this clause has expired, the Government

may bring suit at its expense to enforce a subcontractor's, manufacturer's, or supplier's warranty.

(i) Unless a defect is caused by the negligence of the Contractor or subcontractor or supplier at any tier, the Contractor shall not be liable for the repair of any defects of material or design furnished by the Government nor for the repair of any damage that results from any defect in Government-furnished material or design.

(j) This warranty shall not limit the Government's rights under the Inspection and Acceptance clause of this contract with respect to latent defects, gross mistakes, or fraud.

52.247-64 PREFERENCE FOR PRIVATELY OWNED U.S. - FLAG COMMERCIAL VESSELS (JUN 1997)

(a) The Cargo Preference Act of 1954 (46 U.S.C. 1241(b)) requires that Federal departments and agencies shall transport in privately owned U.S.-flag commercial vessels at least 50 percent of the gross tonnage of equipment, materials, or commodities that may be transported in ocean vessels (computed separately for dry bulk carriers, dry cargo liners, and tankers). Such transportation shall be accomplished when any equipment, materials, or commodities, located within or outside the United States, that may be transported by ocean vessel are--

(1) Acquired for a U.S. Government agency account;

(2) Furnished to, or for the account of, any foreign nation without provision for reimbursement;

(3) Furnished for the account of a foreign nation in connection with which the United States advances funds or credits, or guarantees the convertibility of foreign currencies; or

(4) Acquired with advance of funds, loans, or guaranties made by or on behalf of the United States.

(b) The Contractor shall use privately owned U.S.-flag commercial vessels to ship at least 50 percent of the gross tonnage involved under this contract (computed separately for dry bulk carriers, dry cargo liners, and tankers) whenever shipping any equipment, materials, or commodities under the conditions set forth in paragraph (a) above, to the extent that such vessels are available at rates that are fair and reasonable for privately owned U.S.-flag commercial vessels.

(c)(1) The Contractor shall submit one legible copy of a rated on-board ocean bill of lading for each shipment to both (i) the Contracting Officer, and (ii) the Division of National Cargo, Office of Market Development, Maritime Administration, U.S. Department of Transportation, Washington, DC 20590. Subcontractor bills of lading shall be submitted through the Prime Contractor.

(2) The Contractor shall furnish these bill of lading copies (i) within 20 working days of the date of loading for shipments originating in the United States, or (ii) within 30 working days for shipments originating outside the United States. Each bill of lading copy shall contain the following information:

(A) Sponsoring U.S. Government agency.

(B) Name of vessel.

(C) Vessel flag of registry.

(D) Date of loading.

(E) Port of loading.

(F) Port of final discharge.

(G) Description of commodity.

(H) Gross weight in pounds and cubic feet if available.

(I) Total ocean freight revenue in U.S. dollars.

(d) Except for contracts at or below the simplified acquisition threshold, the Contractor shall insert the substance of this clause, including this paragraph (d), in all subcontracts or purchase orders under this contract.

(e) The requirement in paragraph (a) does not apply to--

(1) Contracts at or below the simplified acquisition threshold;

(2) Cargoes carried in vessels of the Panama Canal Commission or as required or authorized by law or treaty;

(3) Ocean transportation between foreign countries of supplies purchased with foreign currencies made available, or derived from funds that are made available, under the Foreign Assistance Act of 1961 (22 U.S.C. 2353); and

(4) Shipments of classified supplies when the classification prohibits the use of non-Government vessels.

(f) Guidance regarding fair and reasonable rates for privately owned U.S.-flag commercial vessels may be obtained from the Division of National Cargo, Office of Costs and Rates, Maritime Administration, 400 Seventh Street, SW, Washington, DC 20590, Phone: 202-366-4610.

(End of clause)

52.248-3 VALUE ENGINEERING--CONSTRUCTION (MAR 1989)

(a) General. The Contractor is encouraged to develop, prepare, and submit value engineering change proposals (VECP's) voluntarily. The Contractor shall share in any instant contract savings realized from accepted VECP's, in accordance with paragraph (f) below.

(b) Definitions. "Collateral costs," as used in this clause, means agency costs of operation, maintenance, logistic support, or Government-furnished property.

"Collateral savings," as used in this clause, means those measurable net reductions resulting from a VECP in the agency's overall projected collateral costs, exclusive of acquisition savings, whether or not the acquisition cost changes.

"Contractor's development and implementation costs," as used in this clause, means those costs the Contractor incurs on a VECP specifically in developing, testing, preparing, and submitting the VECP, as well as those costs the Contractor incurs to make the contractual changes required by Government acceptance of a VECP.

"Government costs," as used in this clause, means those agency costs that result directly from developing and implementing the VECP, such as any net increases in the cost of testing, operations, maintenance, and logistic support. The term does not include the normal administrative costs of processing the VECP.

"Instant contract savings," as used in this clause, means the estimated reduction in Contractor cost of performance resulting from acceptance of the VECP, minus allowable Contractor's development and implementation costs, including subcontractors' development and implementation costs (see paragraph (h) below).

"Value engineering change proposal (VECP)" means a proposal that--

(1) Requires a change to this, the instant contract, to implement; and

(2) Results in reducing the contract price or estimated cost without impairing essential functions or characteristics; provided, that it does not involve a change--

(i) In deliverable end item quantities only; or

(ii) To the contract type only.

(c) VECP preparation. As a minimum, the Contractor shall include in each VECP the information described in subparagraphs (1) through (7) below. If the proposed change is affected by contractually required configuration management or similar procedures, the instructions in those procedures relating to format, identification, and priority assignment shall govern VECP preparation. The VECP shall include the following:

(1) A description of the difference between the existing contract requirement and that proposed, the comparative advantages and disadvantages of each, a justification when an item's function or characteristics are being altered, and the effect of the change on the end item's performance.

(2) A list and analysis of the contract requirements that must be changed if the VECP is accepted, including any suggested specification revisions.

(3) A separate, detailed cost estimate for

(i) the affected portions of the existing contract requirement and

(ii) the VECP. The cost reduction associated with the VECP shall take into account the Contractor's allowable development and implementation costs, including any amount attributable to subcontracts under paragraph (h) below.

(4) A description and estimate of costs the Government may incur in implementing the VECP, such as test and evaluation and operating and support costs.

(5) A prediction of any effects the proposed change would have on collateral costs to the agency.

(6) A statement of the time by which a contract modification accepting the VECP must be issued in order to achieve the maximum cost reduction, noting any effect on the contract completion time or delivery schedule.

(7) Identification of any previous submissions of the VECP, including the dates submitted, the agencies and contract numbers involved, and previous Government actions, if known.

(d) Submission. The Contractor shall submit VECP's to the Resident Engineer at the worksite, with a copy to the Contracting Officer.

(e) Government action.

(1) The Contracting Officer shall notify the Contractor of the status of the VECP within 45 calendar days after the contracting office receives it. If additional time is required, the Contracting Officer shall notify the Contractor within the 45-day period and provide the reason for the delay and the expected date of the decision. The Government will process VECP's expeditiously; however, it shall not be liable for any delay in acting upon a VECP.

If the VECP is not accepted, the Contracting Officer shall notify the Contractor in writing, explaining the reasons for rejection. The Contractor may withdraw any VECP, in whole or in part, at any time before it is accepted by the Government. The Contracting Officer may require that the Contractor provide written notification before undertaking significant expenditures for VECP effort.

Any VECP may be accepted, in whole or in part, by the Contracting Officer's award of a modification to this contract citing this clause. The Contracting Officer may accept the VECP, even though an agreement on price reduction has not been reached, by issuing the Contractor a notice to proceed with the change. Until a notice to proceed is issued or a contract modification applies a VECP to this contract, the Contractor shall perform in accordance with the existing contract. The Contracting Officer's decision to accept or reject all or part of any VECP shall be final and not subject to the Disputes clause or otherwise subject to litigation under the Contract Disputes Act of 1978 (41 U.S.C. 601-613).

(f) Sharing.

(1) Rates. The Government's share of savings is determined by subtracting Government costs from instant contract savings and multiplying the result by

(i) 45 percent for fixed-price contracts or

(ii) 75 percent for cost-reimbursement contracts.

(2) Payment. Payment of any share due the Contractor for use of a VECP on this contract shall be authorized by a modification to this contract to--

(i) Accept the VECP;

(ii) Reduce the contract price or estimated cost by the amount of instant contract savings; and

(iii) Provide the Contractor's share of savings by adding the amount calculated to the contract price or fee.

(g) Collateral savings. If a VECP is accepted, the instant contract amount shall be increased by 20 percent of any projected collateral savings determined to be realized in a typical year of use after subtracting any Government costs not previously offset. However, the Contractor's share of collateral savings shall not exceed (1) the contract's firm-fixed-price or estimated cost, at the time the VECP is accepted, or (2) $100,000, whichever is greater. The Contracting Officer shall be the sole determiner of the amount of collateral savings, and that amount shall not be subject to the Disputes clause or otherwise subject to litigation under 41 U.S.C. 601-613.

(h) Subcontracts. The Contractor shall include an appropriate value engineering clause in any subcontract of $50,000 or more and may include one in subcontracts of lesser value. In computing any adjustment in this contract's price under paragraph (f) above, the Contractor's allowable development and implementation costs shall include any subcontractor's allowable development and implementation costs clearly resulting from a VECP accepted by the Government under this contract, but shall exclude any value engineering incentive payments to a subcontractor. The Contractor may choose any arrangement for subcontractor value engineering incentive payments; provided, that these payments shall not reduce the Government's share of the savings resulting from the VECP.

(i) Data. The Contractor may restrict the Government's right to use any part of a VECP or the supporting data by marking the following legend on the affected parts:

"These data, furnished under the Value Engineering-- Construction clause of contract . . . . . , shall not be disclosed outside the Government or duplicated, used, or disclosed, in whole or in part, for any purpose other than to evaluate a value engineering change proposal submitted under the clause. This restriction does not limit the Government's right to use information contained in these data if it has been obtained or is otherwise available from the Contractor or from another source without limitations." If a

VECP is accepted, the Contractor hereby grants the Government unlimited rights in the VECP and supporting data, except that, with respect to data qualifying and submitted as limited rights technical data, the Government shall have the rights specified in the contract modification implementing the VECP and shall appropriately mark the data. (The terms "unlimited rights" and "limited rights" are defined in Part 27 of the Federal Acquisition Regulation.)

52.249-2 TERMINATION FOR CONVENIENCE OF THE GOVERNMENT (FIXED-PRICE) (SEP 1996) - ALTERNATE I (SEP 1996)

(a) The Government may terminate performance of work under this contract in whole or, from time to time, in part if the Contracting Officer determines that a termination is in the Government's interest. The Contracting Officer shall terminate by delivering to the Contractor a Notice of Termination specifying the extent of termination and the effective date.

(b) After receipt of a Notice of Termination, and except as directed by the Contracting Officer, the Contractor shall immediately proceed with the following obligations, regardless of any delay in determining or adjusting any amounts due under this clause:

(1) Stop work as specified in the notice.

(2) Place no further subcontracts or orders (referred to as subcontracts in this clause) for materials, services, or facilities, except as necessary to complete the continued portion of the contract.

(3) Terminate all subcontracts to the extent they relate to the work terminated.

(4) Assign to the Government, as directed by the Contracting Officer, all right, title, and interest of the Contractor under the subcontracts terminated, in which case the Government shall have the right to settle or to pay any termination settlement proposal arising out of those terminations.

(5) With approval or ratification to the extent required by the Contracting Officer, settle all outstanding liabilities and termination settlement proposals arising from the termination of subcontracts; the approval or ratification will be final for purposes of this clause.

(6) As directed by the Contracting Officer, transfer title and deliver to the Government (i) the fabricated or unfabricated parts, work in process, completed work, supplies, and other material produced or acquired for the work terminated, and (ii) the completed or partially completed plans, drawings, information, and other property that, if the contract had been completed, would be required to be furnished to the Government.

(7) Complete performance of the work not terminated.

(8) Take any action that may be necessary, or that the Contracting Officer may direct, for the protection and preservation of the property related to this contract that is in the possession of the Contractor and in which the Government has or may acquire an interest.

(9) Use its best efforts to sell, as directed or authorized by the Contracting Officer, any property of the types referred to in subparagraph (b)(6) of this clause; provided, however, that the Contractor (i) is not required to extend credit to any purchaser and (ii) may acquire the property under the conditions prescribed by, and at prices approved by, the Contracting Officer. The proceeds of any transfer or disposition will be applied to reduce any payments to be made by the Government under this contract, credited to the price or cost of the work, or paid in any other manner directed by the Contracting Officer.

(c) The Contractor shall submit complete termination inventory schedules no later than 120 days from the effective date of termination, unless extended in writing by the Contracting Officer upon written request of the Contractor within this 120-day period.

(d) After expiration of the plant clearance period as defined in Subpart 45.6 of the Federal Acquisition Regulation, the Contractor may submit to the Contracting Officer a list, certified as to quantity and quality, of termination inventory not previously disposed of, excluding items authorized for disposition by the Contracting Officer. The Contractor may request the Government to remove those items or enter into an agreement for their storage. Within 15 days, the Government will accept title to those items and remove them or enter into a storage agreement. The Contracting Officer may verify the list upon removal of the items, or if stored, within 45 days from submission of the list, and shall correct the list, as necessary, before final settlement.

(e) After termination, the Contractor shall submit a final termination settlement proposal to the Contracting Officer in the form and with the certification prescribed by the Contracting Officer. The Contractor shall submit the proposal promptly, but no later than 1 year from the effective date of termination, unless extended in writing by the Contracting Officer upon written request of the Contractor within this 1-year period. However, if the Contracting Officer determines that the facts justify it, a termination settlement proposal may be received and acted on after 1 year or any extension. If the Contractor fails to submit the proposal within the time allowed, the Contracting Officer may determine, on the basis of information available, the amount, if any, due the Contractor because of the termination and shall pay the amount determined.

(f) Subject to paragraph (e) of this clause, the Contractor and the Contracting Officer may agree upon the whole or any part of the amount to be paid or remaining to be paid because of the termination. The amount may include a reasonable allowance for profit on work done. However, the agreed amount, whether under this paragraph (g) or paragraph (g) of this clause, exclusive of costs shown in subparagraph (g)(3) of this clause, may not exceed the total contract price as reduced by (1) the amount of payments previously made and (2) the contract price of work not terminated. The contract shall be modified, and the Contractor paid the agreed amount. Paragraph (g) of this clause shall not limit, restrict, or affect the amount that may be agreed upon to be paid under this paragraph.

(g) If the Contractor and Contracting Officer fail to agree on the whole amount to be paid the Contractor because of the termination of work, the Contracting Officer shall pay the Contractor the amounts determined as follows, but without duplication of any amounts agreed upon under paragraph (f) of this clause:

(1) For contract work performed before the effective date of termination, the total (without duplication of any items) of--

(i) The cost of this work;

(ii) The cost of settling and paying termination settlement proposals under terminated subcontracts that are properly chargeable to the terminated portion of the contract if not included in subdivision (g)(1)(i) of this clause; and

(iii) A sum, as profit on subdivision (g)(1)(i) of this clause, determined by the Contracting Officer under 49.202 of the Federal Acquisition Regulation, in effect on the date of this contract, to be fair and reasonable; however, if it appears that the Contractor would have sustained a loss on the entire contract had it been completed, the Contracting Officer shall allow no profit under this subdivision (iii) and shall reduce the settlement to reflect the indicated rate of loss.

(2) The reasonable costs of settlement of the work terminated, including--

(i) Accounting, legal, clerical, and other expenses reasonably necessary for the preparation of termination settlement proposals and supporting data;

(ii) The termination and settlement of subcontracts (excluding the amounts of such settlements); and

(iii) Storage, transportation, and other costs incurred, reasonably necessary for the preservation, protection, or disposition of the termination inventory.

(h) Except for normal spoilage, and except to the extent that the Government expressly assumed the risk of loss, the Contracting Officer shall exclude from the amounts payable to the Contractor under paragraph (g) of this clause, the fair value, as determined by the Contracting Officer, of property that is destroyed, lost, stolen, or damaged so as to become undeliverable to the Government or to a buyer.

(i) The cost principles and procedures of Part 31 of the Federal Acquisition Regulation, in effect on the date of this contract, shall govern all costs claimed, agreed to, or determined under this clause.

(j) The Contractor shall have the right of appeal, under the Disputes clause, from any determination made by the Contracting Officer under paragraph (e), (g), or (l) of this clause, except that if the Contractor failed to submit the termination settlement proposal or request for equitable adjustment within the time provided in paragraph (e) or (l), respectively, and failed to request a time extension, there is no right of appeal.

(k) In arriving at the amount due the Contractor under this clause, there shall be deducted--

(1) All unliquidated advance or other payments to the Contractor under the terminated portion of this contract;

(2) Any claim which the Government has against the Contractor under this contract; and

(3) The agreed price for, or the proceeds of sale of, materials, supplies, or other things acquired by the Contractor or sold under the provisions of this clause and not recovered by or credited to the Government.

(l) If the termination is partial, the Contractor may file a proposal with the Contracting Officer for an equitable adjustment of the price(s) of the continued portion of the contract. The Contracting Officer shall make any equitable adjustment agreed upon. Any proposal by the Contractor for an equitable adjustment under this clause shall be requested within 90 days from the effective date of termination unless extended in writing by the Contracting Officer.

(m)(1) The Government may, under the terms and conditions it prescribes, make partial payments and payments against costs incurred by the Contractor for the terminated portion of the contract, if the Contracting Officer believes the total of these payments will not exceed the amount to which the Contractor will be entitled.

(2) If the total payments exceed the amount finally determined to be due, the Contractor shall repay the excess to the Government upon demand, together with interest computed at the rate established by the Secretary of the Treasury under 50 U.S.C. App. 1215(b)(2). Interest shall be computed for the period from the date the excess payment is received by the Contractor to the date the excess is repaid. Interest shall not be charged on any excess payment due to a reduction in the Contractor's termination settlement proposal because of retention or other disposition of termination inventory until 10 days after the date of the retention or disposition, or a later date determined by the Contracting Officer because of the circumstances.

(n) Unless otherwise provided in this contract or by statute, the Contractor shall maintain all records and documents relating to the terminated portion of this contract for 3 years after final settlement. This includes all books and other evidence bearing on the Contractor's costs and expenses under this contract. The Contractor shall make these records and documents available to the Government, at the Contractor's office, at all reasonable times, without any direct charge. If approved by the Contracting Officer, photographs, microphotographs, or other authentic reproductions may be maintained instead of original records and documents.

52.249-10 DEFAULT (FIXED-PRICE CONSTRUCTION) (APR 1984)

(a) If the Contractor refuses or fails to prosecute the work or any separable part, with the diligence that will insure its completion within the time specified in this contract including any extension, or fails to complete the work within this time, the Government may, by written notice to the Contractor, terminate the right to proceed with the work (or the separable part of the work) that has been delayed. In this event, the Government may take over the work and complete it by contract or otherwise, and may take possession of and use any materials, appliances, and plant on the work site necessary for completing the work. The Contractor and its sureties shall be liable for any damage to the Government resulting from the Contractor's refusal or failure to complete the work within the specified time, whether or not the Contractor's right to proceed with the work is terminated. This liability includes any increased costs incurred by the Government in completing the work.

(b) The Contractor's right to proceed shall not be terminated nor the Contractor charged with damages under this clause, if--

(1) The delay in completing the work arises from unforeseeable causes beyond the control and without the fault or negligence of the Contractor. Examples of such causes include

(i) acts of God or of the public enemy,

(ii) acts of the Government in either its sovereign or contractual capacity,

(iii) acts of another Contractor in the performance of a contract with the Government,

(iv) fires,

(v) floods,

(vi) epidemics,

(vii) quarantine restrictions,

(viii) strikes,

(ix) freight embargoes,

(x) unusually severe weather, or delays of subcontractors or suppliers at any tier arising from unforeseeable causes beyond the control and without the fault or negligence of both the Contractor and the subcontractors or suppliers; and

(2) The Contractor, within 10 days from the beginning of any delay (unless extended by the Contracting Officer), notifies the Contracting Officer in writing of the causes of delay. The Contracting Officer shall ascertain the facts and the extent of delay. If, in the judgment of the Contracting Officer, the findings of fact warrant such action, the time for completing the work shall be extended. The findings of the Contracting Officer shall be final and conclusive on the parties, but subject to appeal under the Disputes clause.

(c) If, after termination of the Contractor's right to proceed, it is determined that the Contractor was not in default, or that the delay was excusable, the rights and obligations of the parties will be the same as if the termination had been issued for the convenience of the Government.

The rights and remedies of the Government in this clause are in addition to any other rights and remedies provided by law or under this contract.

52.253-1 COMPUTER GENERATED FORMS (JAN 1991)

(a) Any data required to be submitted on a Standard or Optional Form prescribed by the Federal Acquisition Regulation (FAR) may be submitted on a computer generated version of the form, provided there is no change to the name, content, or sequence of the data elements on the form, and provided the form carries the Standard or Optional Form number and edition date.

(b) Unless prohibited by agency regulations, any data required to be submitted on an agency unique form prescribed by an agency supplement to the FAR may be submitted on a computer generated version of the form provided there is no change to the name, content, or sequence of the data elements on the form and provided the form carries the agency form number and edition date.

(c) If the Contractor submits a computer generated version of a form that is different than the required form, then the rights and obligations of the parties will be determined based on the content of the required form.

252.201-7000 CONTRACTING OFFICER'S REPRESENTATIVE (DEC 1991)

(a) "Definition. Contracting officer's representative" means an individual designated in accordance with subsection 201.602-2 of the Defense Federal Acquisition Regulation Supplement and authorized in writing by the contracting officer to perform specific technical or administrative functions.

(b) If the Contracting Officer designates a contracting officer's representative (COR), the Contractor will receive a copy of the written designation. It will specify the extent of the COR's authority to act on behalf of the contracting officer. The COR is not authorized to make any commitments or changes that will affect price, quality, quantity, delivery, or any other term or condition of the contract.

(End of clause)

252.203-7001 PROHIBITION ON PERSONS CONVICTED OF FRAUD OR OTHER DEFENSE-CONTRACT-RELATED FELONIES (MAR 1999)

(a) *Definitions.* As used in this clause—

(1) "Arising out of a contract with the DoD" means any act in connection with—

(i) Attempting to obtain;

(ii) Obtaining, or

(iii) Performing a contract or first-tier subcontract of any agency, department, or component of the Department of Defense (DoD).

(2) "Conviction of fraud or any other felony" means any conviction for fraud or a felony in violation of state or Federal criminal statutes, whether entered on a verdict or plea, including a plea of *nolo contendere*, for which sentence has been imposed.

(3) "Date of conviction" means the date judgment was entered against the individual.

(b) Any individual who is convicted after September 29, 1988, of fraud or any other felony arising out of a contract with the DoD is prohibited from serving--

(1) In a management or supervisory capacity on any DoD contract or first-tier subcontract;

(2) On the board of directors of any DoD contractor or first-tier subcontractor;

(3) As a consultant, agent, or representative for any DoD contractor or first-tier subcontractor; or

(4) In any other capacity with the authority to influence, advise, or control the decisions of any DoD contractor or subcontractor with regard to any DoD contract or first-tier subcontract.

(c) Unless waived, the prohibition in paragraph (b) of this clause applies for not less than 5 years from the date of conviction.

(d) 10 U.S.C. 2408 provides that a defense contractor or first-tier subcontractor shall be subject to a criminal penalty of not more than $500,000 if convicted of knowingly—

(1) Employing a person under a prohibition specified in paragraph (b) of this clause; or

(2) Allowing such a person to serve on the board of directors of the contractor or first-tier subcontractor.

(e) In addition to the criminal penalties contained in 10 U.S.C. 2408, the Government may consider other available remedies, such as—

(1) Suspension or debarment;

(2) Cancellation of the contract at no cost to the Government; or

(3) Termination of the contract for default.

(f) The Contractor may submit written requests for waiver of the prohibition in paragraph (b) of this clause to the Contracting Officer. Requests shall clearly identify—

(1) The person involved;

(2) The nature of the conviction and resultant sentence or punishment imposed;

(3) The reasons for the requested waiver; and

(4) An explanation of why a waiver is in the interest of national security.

(g) The Contractor agrees to include the substance of this clause, appropriately modified to reflect the identity and relationship of the parties, in all first-tier subcontracts exceeding the simplified acquisition threshold in Part 2 of the Federal Acquisition Regulation, except those for commercial items or components.

(h) Pursuant to 10 U.S.C. 2408(c), defense contractors and subcontractors may obtain information as to whether a particular person has been convicted of fraud or any other felony arising out of a contract with the DoD by contacting The Office of Justice Programs, The Denial of Federal Benefits Office, U.S. Department of Justice, telephone (202) 616-3507.

(End of clause)

252.204-7000 DISCLOSURE OF INFORMATION (DEC 1991)

(a) The Contractor shall not release to anyone outside the Contractor's organization any unclassified information, regardless of medium (e.g., film, tape, document), pertaining to any part of this contract or any program related to this contract, unless--

(1) The Contracting Officer has given prior written approval; or

(2) The information is otherwise in the public domain before the date of release.

(b) Requests for approval shall identify the specific information to be released, the medium to be used, and the purpose for the release. The Contractor shall submit its request to the Contracting Officer at least 45 days before the proposed date for release.

(c) The Contractor agrees to include a similar requirement in each subcontract under this contract. Subcontractors shall submit requests for authorization to release through the prime contractor to the Contracting Officer.

(End of clause)

252.204-7003 CONTROL OF GOVERNMENT PERSONNEL WORK PRODUCT (APR 1992)

The Contractor's procedures for protecting against unauthorized disclosure of information shall not require Department of Defense employees or members of the Armed Forces to relinquish control of their work products, whether classified or not, to the contractor.

(End of clause)

252.204-7004 REQUIRED CENTRAL CONTRACTOR REGISTRATION.(MAR 1998)

(a) Definitions.

As used in this clause--

(1) Central Contractor Registration (CCR database means the primary DoD repository for contractor information required for the conduct of business with DoD.

(2) Data Universal Numbering System (DUNS) number means the 9-digit number assigned by Dun and Bradstreet Information Services to identify unique business entities.

(3) Data Universal Numbering System +4 (DUNS+4) number means the DUNS number assigned by Dun and Bradstreet plus a 4-digit suffix that may be assigned by a parent (controlling) business concern. This 4-digit suffix may be assigned at the discretion of the parent business concern for such purposes as identifying subunits or affiliates of the parent business concern.

(4) Registered in the CCR database means that all mandatory information, including the DUNS number or the DUNS+4 number, if applicable, and the corresponding Commercial and Government Entity (CAGE) code, is in the CCR database; the DUNS number and the CAGE code have been validated; and all edits have been successfully completed.

(b)(1) By submission of an offer, the offeror acknowledges the requirement that a prospective awardee must be registered in the CCR database prior to award, during performance, and through final payment of any contract resulting from this solicitation, except for awards to foreign vendors for work to be performed outside the United States.

(2) The offeror shall provide its DUNS or, if applicable, its DUNS+4 number with its offer, which will be used by the Contracting Officer to verify that the offeror is registered in the CCR database.

(3) Lack of registration in the CCR database will make an offeror ineligible for award.

(4) DoD has established a goal of registering an applicant in the CCR database within 48 hours after receipt of a complete and accurate application via the Internet. However, registration of an applicant submitting an

application through a method other than the Internet may take up to 30 days. Therefore, offerors that are not registered should consider applying for registration immediately upon receipt of this solicitation.

(c) The Contractor is responsible for the accuracy and completeness of the data within the CCR, and for any liability resulting from the Government's reliance on inaccurate or incomplete data. To remain registered in the CCR database after the initial registration, the Contractor is required to confirm on an annual basis that its information in the CCR database is accurate and complete.

(d) Offerors and contractors may obtain information on registration and annual confirmation requirements by calling 1-888-227-2423, or via the Internet at http://ccr.edi.disa.mil.

252.209-7000 ACQUISITION FROM SUBCONTRACTORS SUBJECT TO ONSITE INSPECTION UNDER THE INTERMEDIATE-RANGE NUCLEAR FORCES (INF) TREATY (NOV 1995)

(a) The Contractor shall not deny consideration for a subcontract award under this contract to a potential subcontractor subject to on-site inspection under the INF Treaty, or a similar treaty, solely or in part because of the actual or potential presence of Soviet inspectors at the subcontractor's facility, unless the decision is approved by the Contracting Officer.

(b) The Contractor shall incorporate this clause, including this paragraph (b), in all solicitations and contracts exceeding the simplified acquisition threshold in part 13 of the Federal Acquisition Regulation, except those for commercial items.

252.219-7003 SMALL, SMALL DISADVANTAGED AND WOMEN-OWNED SMALL BUSINESS SUBCONTRACTING PLAN (DOD CONTRACTS) (APR. 1996)

This clause supplements the Federal Acquisition Regulation 52.219-9, Small, Small Disadvantaged and Women-Owned Small Business Subcontracting Plan, clause of this contract.

(a) *Definitions. Historically black colleges and universities,* as used in this clause, means institutions determined by the Secretary of Education to meet the requirements of 34 CFR 608.2. The term also means any nonprofit research institution that was an integral part of such a college or university before November 14, 1986.

Minority institutions, as used in this clause, means institutions meeting the requirements of section 1046(3) of the Higher Education Act of 1965 (20 U.S.C. 1135d-5(3)). The term also includes Hispanic-serving institutions as defined in section 316(b)(1) of such Act (20 U.S.C. 1059c(b)(1)).

(b) Except for company or division-wide commercial items subcontracting plans, the term *small disadvantaged business,* when used in the FAR 52.219-9 clause, includes historically black colleges and universities and minority institutions, in addition to small disadvantaged business concerns.

(c) Work under the contract or its subcontracts shall be credited toward meeting the small disadvantaged business concern goal required by paragraph (d) of the FAR 52.219-9 clause when:

(1) It is performed on Indian lands or in joint venture with an Indian tribe or a tribally-owned corporation, and

(2) It meets the requirements of 10 U.S.C. 2323a.

(d) Subcontracts awarded to workshops approved by the Committee for Purchase from People Who are Blind or Severely Disabled (41 U.S.C. 46-48), may be counted toward the Contractor's small business subcontracting goal.

(e) A mentor firm, under the Pilot Mentor-Protege Program established under Section 831 of Pub. L. 101-510, as amended, may count toward its small disadvantaged business goal, subcontracts awarded--

(f) The master plan approval referred to in paragraph (f) of the FAR 52.219-9 clause is approval by the Contractor's cognizant contract administration activity.

(g) In those subcontracting plans which specifically identify small, small disadvantaged, and women-owned small businesses, the Contractor shall notify the Administrative Contracting Officer of any substitutions of firms that are not small, small disadvantaged, or women-owned small businesses for the firms listed in the subcontracting plan. Notifications shall be in writing and shall occur within a reasonable period of time after award of the subcontract. Contractor-specified formats shall be acceptable.

(End of clause)

252.223-7004 DRUG-FREE WORK FORCE (SEP 1988)

(a) Definitions.

(1) "Employee in a sensitive position," as used in this clause, means an employee who has been granted access to classified information; or employees in other positions that the Contractor determines involve national security; health or safety, or functions other than the foregoing requiring a high degree of trust and confidence.

(2) "Illegal drugs," as used in this clause, means controlled substances included in Schedules I and II, as defined by section 802(6) of title 21 of the United States Code, the possession of which is unlawful under chapter 13 of that Title. The term "illegal drugs" does not mean the use of a controlled substance pursuant to a valid prescription or other uses authorized by law.

(b) The Contractor agrees to institute and maintain a program for achieving the objective of a drug-free work force. While this clause defines criteria for such a program, contractors are encouraged to implement alternative approaches comparable to the criteria in paragraph (c) that are designed to achieve the objectives of this clause.

(c) Contractor programs shall include the following, or appropriate alternatives:

(1) Employee assistance programs emphasizing high level direction, education, counseling, rehabilitation, and coordination with available community resources;

(2) Supervisory training to assist in identifying and addressing illegal drug use by Contractor employees;

(3) Provision for self-referrals as well as supervisory referrals to treatment with maximum respect for individual confidentiality consistent with safety and security issues;

(4) Provision for identifying illegal drug users, including testing on a controlled and carefully monitored basis. Employee drug testing programs shall be established taking account of the following:

(i) The Contractor shall establish a program that provides for testing for the use of illegal drugs by employees in sensitive positions. The extent of and criteria for such testing shall be determined by the Contractor based on considerations that include the nature of the work being performed under the contract, the employee's duties, and efficient use of Contractor resources, and the risks to health, safety, or national security that could result from the failure of an employee adequately to discharge his or her position.

(ii) In addition, the Contractor may establish a program for employee drug testing--

(A) When there is a reasonable suspicion that an employee uses illegal drugs; or

(B) When an employees has been involved in an accident or unsafe practice;

(C) As part of or as a follow-up to counseling or rehabilitation for illegal drug use;

(D) As part of a voluntary employee drug testing program.

(iii) The Contractor may establish a program to test applicants for employment for illegal drug use.

(iv) For the purpose of administering this clause, testing for illegal drugs may be limited to those substances for which testing is prescribed by section 2..1 of subpart B of the "Mandatory Guidelines for Federal Workplace Drug Testing Programs" (53 FR 11980 (April 11, 1988), issued by the Department of Health and Human Services.

(d) Contractors shall adopt appropriate personnel procedures to deal with employees who are found to be using drugs illegally. Contractors shall not allow any employee to remain on duty or perform in a sensitive position who is found to use illegal drugs until such times as the Contractor, in accordance with procedures established by the Contractor, determines that the employee may perform in such a position.

(e) The provisions of this clause pertaining to drug testing program shall not apply to the extent that are inconsistent with state or local law, or with an existing collective bargaining agreement; provided that with respect to the latter, the Contractor agrees those issues that are in conflict will be a subject of negotiation at the next collective bargaining session.

(End of clause)

252.225-7031 SECONDARY ARAB BOYCOTT OF ISRAEL (JUN 1992)

(a) Definitions. As used in this clause--

(1) "Foreign person" means any person other than a United States person as defined in Section 16(2) of the Export Administration Act of 1979 (50 U.S.C. App. Sec 2415).

(2) "United States person" is defined in Section 16(2) of the Export Administration Act of 1979 and means any United States resident or national (other than an individual resident outside the United States and employed by other than a United States person), any domestic concern (including any permanent domestic establishment of any foreign concern), and any foreign subsidiary or affiliate (including any permanent foreign establishment) of any domestic concern which is controlled in fact by such domestic concerns, as determined under regulations of the President.

(b) Certification. By submitting this offer, the Offeror, if a foreign person, company or entity, certifies that it--

(1) Does not comply with the Secondary Arab Boycott of Israel; and

(2) Is not taking or knowingly agreeing to take any action, with respect to the Secondary Boycott of Israel by Arab countries, which 50 U.S.C. App. Sec 2407(a) prohibits a United States person from taking.

(End of clause)

252.227-7033 RIGHTS IN SHOP DRAWINGS (APR 1966)

(a) Shop drawings for construction means drawings, submitted to the Government by the Construction Contractor, subcontractor or any lower-tier subcontractor pursuant to a construction contract, showing in detail (i) the proposed fabrication and assembly of structural elements and (ii) the installation (i.e., form, fit,

and attachment details) of materials or equipment. The Government may duplicate, use, and disclose in any manner and for any purpose shop drawings delivered under this contract.

(b) This clause, including this paragraph (b), shall be included in all subcontracts hereunder at any tier.

252.231-7000 SUPPLEMENTAL COST PRINCIPLES (DEC 1991)

When the allowability of costs under this contract is determined in accordance with part 31 of the Federal Acquisition Regulation (FAR), allowability shall also be determined in accordance with part 231 of the Defense FAR Supplement, in effect on the date of this contract.

252.236-7000 MODIFICATION PROPOSALS - PRICE BREAKDOWN. (DEC 1991)

(a) The Contractor shall furnish a price breakdown, itemized as required and within the time specified by the Contracting Officer, with any proposal for a contract modification.

(b) The price breakdown --

(1) Must include sufficient detail to permit an analysis of profit, and of all costs for --

(i) Material;

(ii) Labor;

(iii) Equipment;

(iv) Subcontracts; and

(v) Overhead; and

(2) Must cover all work involved in the modification, whether the work was deleted, added, or changed.

(c) The Contractor shall provide similar price breakdowns to support any amounts claimed for subcontracts.

(d) The Contractor's proposal shall include a justification for any time extension proposed.

252.236-7002 OBSTRUCTION OF NAVIGABLE WATERWAYS. (DEC 1991)

(a) The Contractor shall --

(1) Promptly recover and remove any material, plant, machinery, or appliance which the contractor loses, dumps, throws overboard, sinks, or misplaces, and which, in the opinion of the Contracting Officer, may be dangerous to or obstruct navigation;

(2) Give immediate notice, with description and locations of any such obstructions, to the Contracting Officer; and

(3) When required by the Contracting Officer, mark or buoy such obstructions until the same are removed.

(b) The Contracting Officer may --

(1) Remove the obstructions by contract or otherwise should the Contractor refuse, neglect, or delay compliance with paragraph (a) of this clause; and

(2) Deduct the cost of removal from any monies due or to become due to the Contractor; or

(3) Recover the cost of removal under the Contractor's bond.

(c) The Contractor's liability for the removal of a vessel wrecked or sunk without fault or negligence is limited to that provided in sections 15, 19, and 20 of the River and Harbor Act of March 3, 1899 (33 U.S.C. 410 et. seq.).

252.236-7004 PAYMENT FOR MOBILIZATION AND DEMOBILIZATION. (DEC 1991)

(a) The Government will pay all costs for the mobilization and demobilization of all of the Contractor's plant and equipment at the contract lump sum price for this item.

(1) 60 percent of the lump sum price upon completion of the contractor's mobilization at the work site.

(2) The remaining 40 percent upon completion of demobilization.

(b) The Contracting Officer may require the Contractor to furnish cost data to justify this portion of the bid if the Contracting Officer believes that the percentages in paragraphs (a) (1) and (2) of this clause do not bear a reasonable relation to the cost of the work in this contract.

(1) Failure to justify such price to the satisfaction of the Contracting Officer will result in payment, as determined by the Contracting Officer, of --

(i) Actual mobilization costs at completion of mobilization;

(ii) Actual demobilization costs at completion of demobilization; and

(iii) The remainder of this item in the final payment under this contract.

(2) The Contracting Officer's determination of the actual costs in paragraph (b)(1) of this clause is not subject to appeal.

252.236-7008 CONTRACT PRICES - BIDDING SCHEDULES. (DEC 1991)

(a) The Government's payment for the items listed in the Bidding Schedule shall constitute full compensation to the Contractor for --

(1) Furnishing all plant, labor, equipment, appliances, and materials; and

(2) Performing all operations required to complete the work in conformity with the drawings and specifications.

(b) The Contractor shall include in the prices for the items listed in the Bidding Schedule all costs for work in the specifications, whether or not specifically listed in the Bidding Schedule.

252.243-7001 PRICING OF CONTRACT MODIFICATIONS (DEC 1991)

When costs are a factor in any price adjustment under this contract, the contract cost principles and procedures in FAR part 31 and DFARS part 231, in effect on the date of this contract, apply.

252.243-7002 REQUESTS FOR EQUITABLE ADJUSTMENT (MAR 1998)

(a) The amount of any request for equitable adjustment to contract terms shall accurately reflect the contract adjustment for which the Contractor believes the Government is liable. The request shall include only costs for performing the change, and shall not include any costs that already have been reimbursed or that have been separately claimed. All indirect costs included in the request shall be properly allocable to the change in accordance with applicable acquisition regulations.

(b) In accordance with 10 U.S.C. 2410(a), any request for equitable adjustment to contract terms that exceeds the simplified acquisition threshold shall bear, at the time of submission, the following certificate executed by an individual authorized to certify the request on behalf of the Contractor:

I certify that the request is made in good faith, and that the supporting data are accurate and complete to the best of my knowledge and belief.

(Official's Name)

(Title)

(c) The certification in paragraph (b) of this clause requires full disclosure of all relevant facts, including--

(1) Cost or pricing data if required in accordance with subsection 15.403-4 of the Federal Acquisition Regulation (FAR); and

(2) Information other than cost or pricing data, in accordance with subsection 15.403-3 of the FAR, including actual cost data and data to support any estimated costs, even if cost or pricing data are not required.

(d) The certification requirement in paragraph (b) of this clause does not apply to----

(1) Requests for routine contract payments; for example, requests for payment for accepted supplies and services, routine vouchers under a cost-reimbursement type contract, or progress payment invoices; or

(2) Final adjustment under an incentive provision of the contract.

252.247-7023 TRANSPORTATION OF SUPPLIES BY SEA(NOV 1995)

(a) Definitions. As used in this clause --

(1) "Components" means articles, materials, and supplies incorporated directly into end products at any level of manufacture, fabrication, or assembly by the Contractor or any subcontractor.

(2) "Department of Defense" (DoD) means the Army, Navy, Air Force, Marine Corps, and defense agencies.

(3) "Foreign flag vessel" means any vessel that is not a U.S.-flag vessel.

(4) "Ocean transportation" means any transportation aboard a ship, vessel, boat, barge, or ferry through international waters.

(5) "Subcontractor" means a supplier, materialman, distributor, or vendor at any level below the prime contractor whose contractual obligation to perform results from, or is conditioned upon, award of the prime contract and who is performing any part of the work or other requirement of the prime contract. However, effective May 1, 1996, the term does not include a supplier, materialman, distributor, or vendor of commercial items or commercial components.

(6) "Supplies" means all property, except land and interests in land, that is clearly identifiable for eventual use by or owned by the DoD at the time of transportation by sea.

(i) An item is clearly identifiable for eventual use by the DoD if, for example, the contract documentation contains a reference to a DoD contract number or a military destination.

(ii) "Supplies" includes (but is not limited to) public works; buildings and facilities; ships; floating equipment and vessels of every character, type, and description, with parts, subassemblies, accessories, and equipment; machine tools; material; equipment; stores of all kinds; end items; construction materials; and components of the foregoing.

(7) "U.S.-flag vessel" means a vessel of the United States or belonging to the United States, including any vessel registered or having national status under the laws of the United States.

(b) The Contractor shall employ U.S.-flag vessels in the transportation by sea of any supplies to be furnished in the performance of this contract. The Contractor and its subcontractors may request that the Contracting Officer authorize shipment in foreign-flag vessels, or designate available U.S.-flag vessels, if the Contractor or a subcontractor believes that --

(1) U.S.-flag vessels are not available for timely shipment;

(2) The freight charges are inordinately excessive or unreasonable; or

(3) Freight charges are higher than charges to private persons for transportation of like goods.

(c) The Contractor must submit any request for use of other than U.S.-flag vessels in writing to the Contracting Officer at least 45 days prior to the sailing date necessary to meet its delivery schedules. The Contracting Officer will process requests submitted after such date(s) as expeditiously as possible, but the Contracting Officer's failure to grant approvals to meet the shipper's sailing date will not of itself constitute a compensable delay under this or any other clause of this contract. Requests shall contain at a minimum --

(1) Type, weight, and cube of cargo;

(2) Required shipping date;

(3) Special handling and discharge requirements;

(4) Loading and discharge points;

(5) Name of shipper and consignee;

(6) Prime contract number; and

(7) A documented description of efforts made to secure U.S.-flag vessels, including points of contact (with names and telephone numbers) with at least two U.S.-flag carriers contacted. Copies of telephone notes, telegraphic and facsimile message or letters will be sufficient for this purpose.

(d) The Contractor shall, within 30 days after each shipment covered by this clause, provide the Contracting Officer and the Division of National Cargo, Office of Market Development, Maritime Administration, U.S. Department of Transportation, Washington, DC 20590, one copy of the rated on board vessel operating carrier's ocean bill of lading, which shall contain the following information --

(1) Prime contract number;

(2) Name of vessel;

(3) Vessel flag of registry;

(4) Date of loading;

(5) Port of loading;

(6) Port of final discharge;

(7) Description of commodity;

(8) Gross weight in pounds and cubic feet if available;

(9) Total ocean freight in U.S. dollars; and

(10) Name of the steamship company.

(e) The Contractor agrees to provide with its final invoice under this contract a representation that to the best of its knowledge and belief --

(1) No ocean transportation was used in the performance of this contract;

(2) Ocean transportation was used and only U.S.-flag vessels were used for all ocean shipments under the contract;

(3) Ocean transportation was used, and the Contractor had the written consent of the Contracting Officer for all non-U.S.-flag ocean transportation; or

(4) Ocean transportation was used and some or all of the shipments were made on non-U.S.-flag vessels without the written consent of the Contracting Officer. The Contractor shall describe these shipments in the following format:

ITEM DESCRIPTION	CONTRACT LINE ITEMS	QUANTITY

TOTAL_____

(f) If the final invoice does not include the required representation, the Government will reject and return it to the Contractor as an improper invoice for the purposes of the Prompt Payment clause of this contract. In the event there has been unauthorized use of non-U.S.-flag vessels in the performance of this contract, the Contracting Officer is entitled to equitably adjust the contract, based on the unauthorized use.

(g) The Contractor shall include this clause, including this paragraph (g) in all subcontracts under this contract, which exceed the small purchase limitation of section 13.000 of the Federal Acquisition Regulation.

252.247-7024 NOTIFICATION OF TRANSPORTATION OF SUPPLIES BY SEA(NOV 1995)

(a) The Contractor has indicated by the response to the solicitation provision, Representation of Extent of Transportation by Sea, that it did not anticipate transporting by sea any supplies. If, however, after the award of this contract, the Contractor learns that supplies, as defined in the Transportation of Supplies by Sea clause of this contract, will be transported by sea, the Contractor --

(1) Shall notify the Contracting Officer of that fact; and

(2) Hereby agrees to comply with all the terms and conditions of the Transportation of Supplies by Sea clause of this contract.

(b) The Contractor shall include this clause, including this paragraph (b), revised as necessary to reflect the relationship of the contracting parties, in all subcontracts hereunder, except (effective May 1, 1996) subcontracts for the acquisition of commercial items or components.

TABLE OF CONTENTS

SPECIAL CONTRACT REQUIREMENTS

00800	SPECIAL CLAUSES
00805	CONTRACT ADMINISTRATION
00815	WAGE RATES
00830	PROJECT AND SAFETY SIGN LAYOUT
00835	REGIONS FOR THE CONSTRUCTION EQUIPMENT OWNERSHIP AND OPERATING EXPENSE SCHEDULE
00840	LEAD PAINT TEST RESULTS

THIS PAGE HAS BEEN LEFT INTENTIONALLY BLANK

SECTION 00800

SPECIAL CLAUSES

INDEX

PARA	TITLE
SC-1	COMMENCEMENT, PROSECUTION AND COMPLETION OF WORK
SC-2	LIQUIDATED DAMAGES - CONSTRUCTION
SC-3	CONTRACT DRAWINGS, MAPS AND SPECIFICATIONS
SC-4	PHYSICAL CONDITIONS
SC-5	PERFORMANCE OF WORK BY THE CONTRACTOR
SC-6	LIMITATION ON SUBCONTRACTING
SC-7	ENVIRONMENTAL LITIGATION
SC-8	QUANTITY SURVEYS
SC-9	EQUIPMENT OWNERSHIP AND OPERATING EXPENSE SCHEDULE
SC-10	CERTIFICATES OF COMPLIANCE
SC-11	PERFORMANCE EVALUATION OF CONTRACTOR
SC-12	TIME EXTENSIONS FOR UNUSUALLY SEVERE WEATHER
SC-13	INSURANCE REQUIREMENTS
SC-14	YEAR 2000 COMPLIANCE
SC-15	CONTINUING CONTRACTS

SPECIAL CLAUSES

SC-1 COMMENCEMENT, PROSECUTION, AND COMPLETION OF WORK (APR 1984)

The Contractor shall be required to (a) commence work under this contract within 10 calendar days after the Contractor receives the notice to proceed, (b) prosecute the work diligently, and (c) complete the entire work ready for use not later than 180 calendar days after the date the Contractor receives the notice to proceed. The time stated for completion shall include final cleanup of the premises. (FAR 52.211-10)

SC-2 LIQUIDATED DAMAGES - CONSTRUCTION (APR 1984)

a. If the Contractor fails to complete the work within the time specified in the contract, or any extensions thereof, the Contractor shall pay to the Government as liquidated damages, the sum of $550 for each calendar day of delay.

b. If the Government terminates the Contractor's right to proceed, the resulting damage will consist of liquidated damages until such reasonable time as may be required for final completion of the work together with any increased costs occasioned the Government in completing the work.

c. If the Government does not terminate the Contractor's right to proceed, the resulting damage will consist of liquidated damages until the work is completed or accepted. (FAR 52.211-12)

SC-3 CONTRACT DRAWINGS, MAPS AND SPECIFICATIONS (DEC 1991)

a. The Contractor shall -
(1) Check all drawings furnished immediately upon receipt;
(2) Compare all drawings and verify the figures before laying out the work;
(3) Promptly notify the Contracting Officer of any discrepancies; and
(4) Be responsible for any errors which might have been avoided by complying with this paragraph (b).

b. Large scale drawings shall, in general, govern small scale drawings. Figures marked on drawings shall, in general, be followed in preference to scale measurements.

c. Omissions from the drawings or specifications or the misdescription of details of work which are manifestly necessary to carry out the intent of the drawings and specifications, or which are customarily performed, shall not relieve the contractor from performing such omitted or misdescribed details of the work, but shall be performed as if fully and correctly set forth and described in the drawings and specifications.

d. The work shall conform to the specifications and the contract drawings identified on the following, all of which are available in the office of the District Engineer, U.S. Army Engineer District, Philadelphia, Room 643, Wanamaker Building, 100 Penn Square East, Philadelphia, PA 19107. Drawings are titled: Miscellaneous Repairs Delaware City and Reedy Point Bridges, Inland Waterway, Delaware River to Chesapeake Bay, Delaware and Maryland, and have the following drawing numbers, subtitles, and dates. (DFARS 252.236-7001)

Drawing No.	Subtitle	Date	Latest Revision Date
58440	Reedy Point Bridge - General Plan & Elevation, Drawing Index, Location Maps	---	None
58441	Delaware City Bridge - General Plan and Elevation	---	None
58442	Reedy Point Bridge - Repair Schedule	---	None
58443	Reedy Point Bridge- Substructure Concrete Repairs	---	None
58444	Reedy Point Bridge - Substructure Crack Repairs	---	None
58445	Reedy Point Bridge - Approach Roadway Repairs	---	None
58446	Reedy Point Bridge - Approach Roadway Joint Repairs	---	None
58447	Reedy Point Bridge - Concrete Repair Details I & Guardrail Modifications	---	None
58448	Reedy Point Bridge - Concrete Repair Details II	---	None
58449	Reedy Point Bridge - Ladder & Walkway Repairs	---	None
58450	Reedy Point Bridge - Drainage Repairs	---	None
58451	Delaware City Bridge - Repair Schedule	---	None
58452	Delaware City Bridge - Timber Fender & Misc. Repairs	---	None
58453	Delaware City Bridge - Concrete Repair Details I	---	None
58454	Delaware City Bridge - Sidewalk Replacement	---	None
58455	Delaware City Bridge - Concrete Repair Details II	---	None

SC-4 PHYSICAL CONDITIONS (APR 1984)

Data and information furnished or referred to below is for the Contractor's information. The Government shall not be responsible for any interpretation of or conclusion drawn from the data or information by the Contractor. (FAR 52.236-4)

a. The indications of physical conditions on the drawings and in the specifications are based on as-built record drawings and field inspections.

b. Weather Conditions. The climate of the area is referred to as "continental" by climatologists, characterized by cold winters and moderately hot summers. Complete weather records and reports may be obtained from the local U.S. Weather Bureau Office nearest to the work site. The Contractor shall satisfy himself as to the hazards likely to arise from weather conditions during the construction period.

c. Transportation Facilities. The work site is accessible from the Delaware State Route 9. The Contractor shall be responsible for all investigations

of load carrying capacities of bridges and roadways.

d. Tide Data. The mean range of tides at the site of the work is approximately 6 feet mean low water. All vertical references are in C&D Canal Datum.

e. Magnitude of the Contract Work. The estimated value of the contract work is between $500,000 and $1,000,000.

SC-5 PERFORMANCE OF WORK BY THE CONTRACTOR (APR 1984)

The Contractor shall perform on the site, and with its own organization, work equivalent to at least twenty (20) percent of the total amount of work to be performed under the contract. This percentage may be reduced by a supplemental agreement to this contract if, during performing the work, the Contractor requests a reduction and the Contracting Officer determines that the reduction would be to the advantage of the Government. (FAR 52.236-1)

SC-6 LIMITATION ON SUBCONTRACTING (OCT 1987)

By submission of an offer and execution of a contract, the Contractor agrees that in performance of the contract in the case of a contract for-

(a) Services (except construction). At least 50 percent of the cost of contract performance incurred for personnel shall be expended for employees of the concern.

(b) Supplies (other than procurement from a regular dealer in such supplies). The concern shall perform work for at least 50 percent of the cost of manufacturing the supplies, not including the cost of materials.

(c) General construction. The concern will perform at least 15 percent of the cost of the contract, not including the cost of materials, with its own employees.

(d) Construction by special trade contractors. The concern will perform at least 25 percent of the cost of the contract, not including the cost of materials, with its own employees. (FAR 52.219-14)

SC-7 ENVIRONMENTAL LITIGATION (1974 NOV OCE)

a. If the performance of all or any part of the work is suspended, delayed, or interrupted due to an order of a court of competent jurisdiction as a result of environmental litigation, as defined below, the Contracting Officer, at the request of the Contractor, shall determine whether the order is due in any part to the acts or omissions of the Contractor or a Subcontractor at any tier not required by the terms of the contract. If it is determined that the order is not due in any part to acts or omissions of the Contractor or a Subcontractor at any tier other than as required by the terms of this contract, such suspension, delay, or interruption shall be considered as if ordered by the Contracting Officer in the administration of this contract under the terms of the SUSPENSION OF WORK clause of this contract. The period of such suspension, delay, or interruption shall be considered unreasonable, and an adjustment shall be made for any increase in the cost of performance of this contract (excluding profit) as provided in that clause, subject to all the provisions thereof.

b. The term "environmental litigation", as used herein, means a lawsuit alleging that the work will have an adverse effect on the environment or

that the Government has not duly considered, either substantively or procedurally, the effect of the work on the environment. (CENAP)

SC-8 QUANTITY SURVEYS (APR 1984)

a. Quantity surveys shall be conducted, and the data derived from these surveys shall be used in computing the quantities of work performed and the actual construction completed and in place.

b. The Government shall conduct the original and final surveys and make the computations based on them. The Contractor shall conduct the surveys for any periods for which progress payments are requested and shall make the computations based on these surveys. All surveys conducted by the Contractor shall be conducted under the direction of a representative of the Contracting Officer, unless the Contracting Officer waives this requirement in a specific instance.

c. Promptly upon completing a survey, the Contractor shall furnish the originals of all field notes and all other records relating to the survey or to the layout of the work to the Contracting Officer, who shall use them as necessary to determine the amount of progress payments. The Contractor shall retain copies of all such material furnished to the Contracting Officer. (FAR 52.236-16)

SC-9 EQUIPMENT OWNERSHIP AND OPERATING EXPENSE SCHEDULE (MAR 1995)

a. This clause does not apply to terminations. See 52.231-5001, Basis for Settlement of Proposals, and FAR Part 49.

b. Allowable cost for construction and marine plant and equipment in sound workable condition owned or controlled and furnished by the Contractor or sub-contractor at any tier shall be based on actual cost data for each piece of equipment or groups of similar serial or series for which the Government can determine both ownership and operating costs from the Contractor's accounting records. When both ownership and operating costs cannot be determined for any piece of equipment from the Contractor's accounting records, costs for the equipment shall be based upon the applicable provisions of EP 1110-1-8, "Construction Equipment Ownership and Operating Expense Schedule," Region I and II. Working conditions shall be considered to be average for determining equipment rates using the schedule unless specified otherwise by the Contracting Officer. For equipment not included in the schedule, rates for comparable pieces of equipment may be used or a rate may be developed using the formula provided in the schedule. For forward pricing, the schedule in effect at the time of negotiations shall apply. For retrospective pricing, the schedule in effect as of the time work was performed shall apply.

c. Equipment rental costs are allowable, subject to the provisions of FAR 31.205(d)(ii) and FAR 31.205-36. Rates for equipment rented from an organization under common control, lease-purchase arrangements, and sale-leaseback arrangements, will be determined using the schedule, except that actual rates will be used for equipment leased from an organization under common control that has an established practice of leasing the same or similar equipment to unaffiliated lessees.

d. When actual equipment costs are proposed and the total amount of the pricing action exceeds the small purchase threshold, the contracting officer shall request the contractor to submit either certified cost or pricing data, or partial/limited data, as appropriate. This data shall be

submitted on Standard Form 1411, "Contract Pricing Proposal Cover Sheet." (EFARS 52.231-5000)

Note #1: The small purchase threshold is $100,000.

Note #2: By submitting cost or pricing data, the Contractor grants to the Contracting Officer or an authorizing representative the right to examine those books, records, documents and other supporting data that will permit evaluation of the proposed equipment costs. This right shall extend for two years after expiration of contract performance. After price agreement the Contractor shall certify that the equipment costs or pricing data submitted are accurate, complete and current.

SC-10 CERTIFICATES OF COMPLIANCE

Any certificates required for demonstrating proof of compliance of materials with specifications requirements shall be executed in triplicate copies. Each certificate shall be signed by an official authorized to certify on behalf of the manufacturing company and shall contain the name and address of the Contractor, the project name and location, and the quantity and date or dates of shipment or delivery to which the certificates apply. Copies of laboratory test reports submitted with certificates shall contain the name and address of the testing laboratory and the date or dates of the tests to which the report applies. Certification shall not be construed as relieving the Contractor from furnishing satisfactory material, if, after tests are performed on selected samples, the material is found not to meet the specific requirements. (CENAP)

SC-11 PERFORMANCE EVALUATION OF CONTRACTOR

a. As a minimum, the Contractor's performance will be evaluated upon final acceptance of the work. However, interim evaluation may be prepared at any time during contract performance when determined to be in the best interest of the Government.

b. The format for the evaluation will be DD 2626, and the Contractor will be rated either outstanding, satisfactory, or unsatisfactory in the areas of Contractor Quality Control, Timely Performance, Effectiveness of Management, Compliance with Labor Standards, and Compliance with Safety Standards. The Contractor will be advised of any unsatisfactory rating, either in an individual element or in the overall rating, prior to completing the evaluation, and all Contractor comments will be made a part of the official record. Performance Evaluation Reports will be available to all DOD Contracting offices for their future use in determining Contractor responsibility, in compliance with DFARS 236.201(c)(1). (CENAP)

SC-12 TIME EXTENSIONS FOR UNUSUALLY SEVERE WEATHER (OCT 1989)

a. This clause specifies the procedure for determination of time extensions for unusually severe weather in accordance with the Contract Clause entitled: "Default (Fixed-Price Construction)". In order for the Contracting Officer to award a time extension under this clause, the following conditions must be satisfied:

(1) The weather experienced at the project site during the contract period must be found to be unusually severe, that is, more severe than

the adverse weather anticipated for the project location during any given month.

(2) The unusually severe weather must actually cause a delay to the completion of the project. The delay must be beyond the control and without the fault or negligence of the Contractor.

b. The following schedule of monthly anticipated adverse weather delays is based on National Oceanic and Atmospheric Administration (NOAA) or similar data for the project location and will constitute the base line for monthly weather time evaluations. The Contractor's progress schedule must reflect these anticipated adverse weather delays in all weather dependent activities. For the purpose of this contract, unusually severe weather is defined as daily precipitation equal to or exceeding 0.5 inches and/or maximum daily temperature not exceeding 32 degrees F.

MONTHLY ANTICIPATED ADVERSE WEATHER DELAY
WORK DAYS BASED ON (5) DAY WORK WEEK

JAN	FEB	MAR	APR	MAY	JUN	JUL	AUG	SEP	OCT	NOV	DEC
7	4	2	2	2	2	2	2	2	2	2	3

c. Upon acknowledgment of the Notice to Proceed (NTP) and continuing throughout the contract, the Contractor shall record on the daily CQC report, the occurrence of adverse weather and resultant impact to normal scheduled work. Actual adverse weather days must prevent work on critical activities for 50 percent or more of the Contractor's scheduled work day. The number of actual adverse weather delay days shall include days impacted by actual adverse weather (even if adverse weather occurred in previous month), be calculated chronologically from the first to the last day of each month, and be recorded as full days. If the number of actual adverse weather delay days exceeds the number of days anticipated in paragraph b. above, the Contracting Officer will convert any qualifying delays to calendar days, giving full consideration for equivalent fair weather work days, and issue a modification in accordance with the contract clause entitled: "Default (Fixed Price Construction)". (ER 415-1-15)

SC-13 INSURANCE REQUIREMENTS

Evidence of the following insurance shall be provided to the Contracting Officer prior to commencement of work and shall be maintained throughout the period of performance:

a. General Liability Insurance (Comprehensive form of policy): Bodily Injury Liability - $500,000 per occurrence.

b. Automobile Liability Insurance (Comprehensive form of policy): Bodily Injury Liability - $200,000 per person and $500,000 per accident. Property Damage Liability - $20,000 per accident.

c. Workmen's Compensation and Employer's Liability Insurance: Compliance with applicable workmen's compensation and occupational disease statutes is required. Employer's liability coverage in the minimum amount of $100,000 is also required."

d. Applicable Marine Casualty and Marine Workmen's Compensation Insurance: As appropriate for this contract.

SC-14 YEAR 2000 COMPLIANCE

a. In accordance with FAR 39.106, the contractor shall ensure that with respect to any design, construction, goods, or services under this contract as well as any subsequent task/delivery orders issued under this contract (if applicable), all information technology contained therein shall be Year 2000 compliant.

b. The contractor shall:

(1) Perform, maintain, and provide an inventory of all major components to include structures, equipment, items, parts, and furnishings under this contract and each task/delivery order which may be affected by the Y2K compliance requirement.

(2) Indicate whether each component is currently Year 2000 compliant or requires an upgrade for compliance prior to government acceptance.

SC-15 CONTINUING CONTRACTS (MARCH 1995 EFARS)

a. This is a continuing contract, as authorized by Section 10 of the River and Harbor Act of September 22, 1922 (33 U.S. Code 621). The payment of some portion of the contract price is dependent upon reservations of funds from future appropriations, and from future contribution to the project having one or more non-federal project sponsors. The responsibilities of the Government are limited by this clause notwithstanding any contrary provision of the "Payments to Contractor" clause or any other clause of this contract.

b. The sum of $500,000 has been reserved for this contract and is available for payments to the Contractor during the current fiscal year. It is expected that Congress will make appropriations for future fiscal years from which additional funds together with funds provided by one or more non-federal project sponsors will be reserved for this contract.

c. Failure to make payments in excess of the amount currently reserved, or that may be reserved from time to time, shall not entitle the Contractor to a price adjustment under the terms of this contract except as specifically provided in paragraphs f and i below. No such failure shall constitute a breach of this contract, except that this provision shall not bar a breach-of-contract action if an amount finally determined to be due as a termination allowance remains unpaid for one year due solely to a failure to reserve sufficient additional funds therefore.

d. The Government may at any time reserve additional funds for payments under the contract if there are funds available for such purpose. The Contracting Officer will promptly notify the Contractor of any additional funds reserved for the contract by issuing an administrative modification to the contract.

e. If earnings will be such that funds reserved for the contract will be exhausted before the end of any fiscal year, the Contractor shall give written notice to the Contracting Officer of the estimated date of exhaustion and the amount of additional funds which will be needed to meet payments due or to become due under the contract during that fiscal year. This notice shall be given not less than 45 nor more than 60 days prior to the estimated date of exhaustion.

f. No payments will be made after exhaustion of funds except to the extent that additional funds are reserved for the contract. The Contractor shall

be entitled to simple interest on any payment that the Contracting Officer determines was actually earned under the terms of the contract and would have been made except for exhaustion of funds. Interest shall be computed from the time such payment would otherwise have been made until actually or constructively made, and shall be at the rate established by the Secretary of the Treasury pursuant to Public Law 92-41, 85 STAT 97, as in effect on the first day of the delay in such payment.

g. Any suspension, delay, or interruption of work arising from exhaustion or anticipated exhaustion of funds shall not constitute a breach of this contract and shall not entitle the Contractor to any price adjustment under the "Suspension of Work" clause or in any other manner under this contract.

h. An equitable adjustment in performance time shall be made for any increase in the time required for performance of any part of the work arising from exhaustion of funds or the reasonable anticipation of exhaustion of funds.

i. If, upon the expiration of sixty (60) days after the beginning of the fiscal year following an exhaustion of funds, the Government has failed to reserve sufficient additional funds to cover payments otherwise due, the Contractor, by written notice delivered to the Contracting Officer at any time before such additional funds are reserved, may elect to treat his right to proceed with the work as having been terminated. Such a termination shall be considered a termination for the convenience of the Government.

j. If at any time it becomes apparent that the funds reserved for any fiscal year are in excess of the funds required to meet all payments due or to become due the Contractor because of work performed and to be performed under the contract during the fiscal year, the Government reserves the right, after notice to the Contractor, to reduce said reservation by the amount of such excess. (EFAR 52.232-5000)

--End of Special Clauses--

THIS PAGE HAS BEEN LEFT INTENTIONALLY BLANK

SECTION 00805

CONTRACT ADMINISTRATION DATA

G.1 ACCOUNTING AND APPROPRIATION DATA:
To be furnished at time of award

CONTRACT ADMINISTRATION IS RETAINED BY THE CONTRACTING OFFICER:

U.S. Army Engineer District, Philadelphia
ATTN: CENAP-CT-C (Sandi Fletcher)
Wanamaker Building, 100 Penn Square East
Philadelphia, Pennsylvania 19107-3390
(215) 656-6915

G.3 PAYMENT BY:

U.S. Army Engineer District Finance Center
Attn: CEFC-AO
5722 Integrity Drive
Millington, Tennessee 38054-5005

G.4 BILLING ADDRESS:

Invoices shall be forwarded as follows:

U.S. Army Engineer District, Philadelphia
ATTN: CENAP-OP-C
Wanamaker Building, 100 Penn Square East
Philadelphia, Pennsylvania 19107-3390

TECHNICAL INQUIRIES:

All technical inquiries should be directed to:

Pre-Award: Walter DePrefontaine (215) 656-6882
Post -Award: David Olson (215) 656-6750

THIS PAGE HAS BEEN LEFT INTENTIONALLY BLANK

General Decision Number DE990005

```
            General Decision Number DE990005
   Superseded General Decision No. DE980005
   State: DELAWARE   Construction Type:
   HEAVY   County(ies):
   STATEWIDE
   HEAVY CONSTRUCTION PROJECTS
   Modification Number     Publication Date
               0             03/12/1999
               1             07/09/1999
               2             10/22/1999
  COUNTY(ies):
  STATEWIDE
   CARP0454C  07/01/1998
                                        Rates           Fringes
  NEW CASTLE AND KENT COUNTIES
   PILDRIVERMEN                         24.08           15.32+a
   FOOTNOTE FOR PILEDRIVERMEN:
    a.  PAID HOLIDAYS:  New Year's Day; Memorial Day; Independence
          Day; Labor Day; Thanksgiving Day; Christmas Day and
          Washington's Birthday.
  ---------------------------------------------------------------
   CARP0626B  05/01/1996
                                        Rates           Fringes
  NEW CASTLE AND KENT COUNTIES
   CARPENTERS                           21.82           6.00
  ---------------------------------------------------------------
   CARP1545B  05/01/1998
                                        Rates           Fringes
  KENT & NEW CASTLE COUNTIES
   MILLWRIGHTS                          27.41           7.49
  ---------------------------------------------------------------
   CARP2012B  05/01/1998
                                        Rates           Fringes
  SUSSEX COUNTY
   CARPENTERS                          18.22           6.56
   MILLWRIGHTS                         19.97           6.56
   PILEDRIVERMEN                       19.22           6.56
  ---------------------------------------------------------------
   ELEC0126F  12/01/1998
                                        Rates           Fringes
  LINE CONSTRUCTION:
   Linemen; cable splicers              28.18      2.30+14.75%
   Winch truck operators                19.73      2.30+14.75%
   Truck drivers                        18.32      2.30+14.75%
   Groundmen                            16.91      2.30+14.75%
  ---------------------------------------------------------------
   ELEC0313B  12/01/1996
                                        Rates           Fringes
  ELECTRICIANS                          22.37           49.33%
  ---------------------------------------------------------------
   * ENGI0542F  05/01/1999
                                        Rates           Fringes
```

POWER EQUIPMENT OPERATORS:

GROUP 1	22.45	A+B
GROUP 2	22.15	A+B
GROUP 3	20.19	A+B
GROUP 4	19.86	A+B
GROUP 5	18.01	A+B
GROUP 6	17.49	A+B

FOOTNOTE FOR POWER EQUIPMENT OPERATORS:

A. PAID HOLIDAYS: New Year's Day, Memorial Day; Independence Day; Labor Day; Thanksgiving Day; Christmas Day, and Election Day; Provided the employee works the scheduled work day before and after the scheduled work day following the holiday.

B. 29.5% + $.4.20.

***TOXIC/HAZARDOUS WAST REMOVAL** Add 20 per cent to basic hourly ratge for all classifications

POWER EQUIPMENT OPERATORS CLASSIFICATIONS

GROUP 1: Handling steel and stone in connection with erection; Cranes doing hook work, and Machine handling machinery, Cable Spinning Machines, Helicopters, Concrete pumps, Machines similar to the above including remote control equipment.

GROUP 2: All Types of Cranes, All Types of Backhoes, Cableways, Conveyor Loaders, Draglines, Keystones, All Types of Shovels, Derricks, Trench Shovels, Trenching Machine, Pippin Type Backhoe, Hoist with Two Towers, Pavers 12E and over (Concrete and Blacktop, All Types Overhead Cranes, Builling Hoists - Double Drum (Unless Used as Single Drum), Milling Machine, Mucking Machines in Tunnel, Gradalls, Front End Loaders, Boat Captain, Tandem Scrapers, Tower Type Crane Operation, Erecting, Dismantling, Jumping or Jacking, Drills Self-Contained (Drillmaster Type), Fork Lift (20 Feet and Over), Motor Patrols Fine Grade), Batch Plant with Mixer, Rollers (High Grade Finishing), Mechanic Welder, Spreaders, Bulldozers and Tractors, Side Boom, Bob Cat type (all attachments), Vermeer Saw, Directional Boring Machine, Hydro Ax, Chipper with Boom, Machines similar to the above including remote control equipment.

GROUP 3: Conveyors, (Except Building Conveyors), Building Hoist (Single Drum), Asphalt Plant Engineer, High or Low Pressure Boilers, Well Driller, Fork Lift Trucks (all types), Ditch Witch Type Trencher, Motor Patrol, Concrete Breaking Machine, Rollers, Fine Grade Machines, Stump Grinder, Machines similar to the above including remote control equipment.

GROUP 4: Seamen pulverizing Mixer, Tireman on power equipment, Maintenance Engineer (Power Boat), Farm Tractors, Form Line Graders, Road Finishing Machines, Power Boom, Seed Spreader, Grease Truck, Machines similar to the abovei including remote control equipment.

GROUP 5: Conveyors (Building), Welding Machines, Heaters, Well Points, Compressors, Pumps, Miscellaneous equipment Operator, Machines similar to the above including remote control equipment.

GROUP 6: Fireman, Oilers and Deckhands (Personnel Boats)

IRON0451B 07/01/1999

	Rates	Fringes
IRONWORKERS:		
Structual, Ornamental, Reinforcing		
Riggers & Machinery Movers	23.60	12.25

LABO0199A 05/01/1997

	Rates	Fringes
NEW CASTLE COUNTY		
LABORERS:		
GROUP 1	12.73	7.10
GROUP 2	12.88	7.10
GROUP 3	13.03	7.10
GROUP 4	15.03	7.10

LABORERS CLASSIFICATIONS

GROUP 1: General laborers; asphalt tamper; asphalt raker; concrete pitman; landscaper; planter; puddler; railroad trackman; rubber magazine tender; seeder and arboriate; signalman.
GROUP 2: Pipelayers.
GROUP 3: Blasters; cassions and cofferdams (open air below 8 ft where caissons and cofferdams are 8 ft. or more below level of natural grade adjacent to starting point); diamond point drills; form setters; gunite nozzle operators; wagon drills.
GROUP 4: Asbestos Removal Worker.

LABO0847C 05/01/1997

	Rates	Fringes
KENT & SUSSEX COUNTIES		
LABORERS:		
GROUP 1	12.73	7.10
GROUP 2	12.88	7.10
GROUP 3	13.03	7.10
GROUP 4	15.03	7.10

LABORERS CLASSIFICATIONS

GROUP 1: General laborers; asphalt tamper; asphalt raker; concrete pitman; landscaper; planter; puddler; railroad trackman; rubber magazine tender; seeder and arboriate; signalman.
GROUP 2: Pipelayers.
GROUP 3: Blasters; cassions and cofferdams (open air below 8 ft where caissons and cofferdams are 8 ft. or more below level of natural grade adjacent to starting point); diamond point drills; form setters; gunite nozzle operators; wagon drills.
GROUP 4: Asbestos Removal Worker.

---

* PAIN1021B 05/01/1999

	Rates	Fringes
PAINTERS:		
Brush, Roller	20.50	6.05
Spray, Sandblast	21.05	6.05
Bridge	23.55	6.05

PLAS0699D 05/01/1997

	Rates	Fringes
CEMENT MASONS	20.68	5.12

---

* PLUM0074B 06/21/1999

	Rates	Fringes
KENT (North of the Southern boundary of Dover) AND NEW CASTLE COUNTIES:		
PLUMBERS & PIPEFITTERS	27.94	12.05+a

FOOTNOTE::
A. PAID HOLIDAYS: Labor Day, Christmas Day, and General

Election Day

---

* PLUM0782A 02/15/1999

	Rates	Fringes
KENT (Except area North of the Southern boundary of Dover), AND SUSSEX COUNTIES		
PLUMBERS & PIPEFITTERS	24.32	3.85

TEAM0326B 05/01/1997

	Rates	Fringes
TRUCK DRIVERS:		
GROUP 1	15.11	7.21+a+b
GROUP 2	15.26	7.21+a+b
GROUP 3	15.36	7.21+a+b

FOOTNOTES FOR TRUCK DRIVERS:

a. PAID HOLIDAYS: New Year's Day; Memorial Day; Independence Day; Labor Day; Thanksgiving Day; Christmas Day provided the employee worked the day prior to the holiday or the first scheduled work day following the holiday.

b. PAID VACATION: Employees having at least one year of service receive 1 week paid vacation; employees having at least five years of service receive 2 weeks paid vacation

TRUCK DRIVERS CLASSIFICATIONS

GROUP 1: Dump Trucks (Single Axle); Dumpsters; Escort and Pilot Vehicles; Flatboy; Material Trucks (straight jobs); Greasers, Steamers; Material Checkers and Receivers; Panel Trucks; Pick-ups; Rubber Tired (Towing or Pushing Flatbody Vehicles); Tire Man

GROUP 2: A-Frames; Agitators or Mixers; Asphlat Distributors; Dispatchers; Low-Boys; Semi-Trailers; Tandems and Batch Trucks

GROUP 3: Euclid tupe or similar off-highway equipment (where not self-loaded); Specialized earth moving equipment); Truck Mechanics; Twin Engine Equpment and Double-Hitched Equipment (Where not self-loaded)

WELDERS - Receive rate prescribed for craft performing operation to which welding is incidental.

==========

Unlisted classifications needed for work not included within the scope of the classifications listed may be added after award only as provided in the labor standards contract clauses (29 CFR 5.5(a)(1)(v)).

In the listing above, the "SU" designation means that rates listed under that identifier do not reflect collectively bargained wage and fringe benefit rates. Other designations indicate unions whose rates have been determined to be prevailing.

WAGE DETERMINATION APPEALS PROCESS

1.) Has there been an initial decision in the matter? This can be:

* an existing published wage determination
* a survey underlying a wage determination
* a Wage and Hour Division letter setting forth a position on a wage determination matter
* a conformance (additional classification and rate) ruling

On survey related matters, initial contact, including requests for summaries of surveys, should be with the Wage and Hour Regional Office for the area in which the survey was conducted because those Regional Offices have responsibility for the Davis-Bacon survey program. If the response from this initial contact is not satisfactory, then the process described in 2.) and 3.) should be followed.

With regard to any other matter not yet ripe for the formal process described here, initial contact should be with the Branch of Construction Wage Determinations. Write to:

Branch of Construction Wage Determinations
Wage and Hour Division
U. S. Department of Labor
200 Constitution Avenue, N. W.
Washington, D. C. 20210

2.) If the answer to the question in 1.) is yes, then an interested party (those affected by the action) can request review and reconsideration from the Wage and Hour Administrator (See 29 CFR Part 1.8 and 29 CFR Part 7). Write to:

Wage and Hour Administrator
U.S. Department of Labor
200 Constitution Avenue, N. W.
Washington, D. C. 20210

The request should be accompanied by a full statement of the interested party's position and by any information (wage payment data, project description, area practice material, etc.) that the requestor considers relevant to the issue.

3.) If the decision of the Administrator is not favorable, an interested party may appeal directly to the Administrative Review Board (formerly the Wage Appeals Board). Write to:

Administrative Review Board
U. S. Department of Labor
200 Constitution Avenue, N. W.
Washington, D. C. 20210

4.) All decisions by the Administrative Review Board are final.

END OF GENERAL DECISION

THIS PAGE HAS BEEN LEFT INTENTIONALLY BLANK

Below are two samples of the construction project identification sign showing how this panel is adaptable for use to identify either military (top), or civil works projects (bottom). The graphic format for this 4' x 6' sign panel follows the legend guidelines and layout as specified below. The large 4' x 4' section of the panel on the right is to be white with black legend. The 2' x 4' section of the sign on the left with the full Corps signature (reverse version) is to be screen printed Communications Red on the white background.

This sign is to be placed with the Safety Performance Sign shown on the following page. Mounting and fabrication details are provided on page 16.4.

Special applications or situations not covered in these guidelines should be referred to the District/Division sign coordinator.

Legend Group 1: One- to two-line description of Corps relationship to project.
Color: White
Typeface: 1.25" Helvetica Regular
Maximum line length: 19"

Legend Group 2: Division or District Name (optional). Placed below 10.5" Reverse Signature (6" Castle).
Color: White
Typeface: 1.25" Helvetica Regular

Legend Group 3: One- to three-line project title legend describes the work being done under this contract.
Color: Black
Typeface: 3" Helvetica Bold
Maximum line length: 42"

Legend Group 4: One- to two-line identification of project or facility (civil works) or name of sponsoring department (military).
Color: Black
Typeface: 1.5" Helvetica Regular
Maximum line length: 42"

Cross-align the first line of Legend Group 4 with the first line of the Corps Signature (US Army Corps) as shown.

Legend Groups 5a-b: One- to five-line identification of prime contractors including: type (architect, general contractor, etc.), corporate or firm name, city, state. Use of Legend Group 5 is optional.
Color: Black
Typeface: 1.25" Helvetica Regular
Maximum line length: 21"

All typography is flush left and rag right, upper and lower case with initial capitals only as shown. Letter- and word-spacing to follow Corps standards.

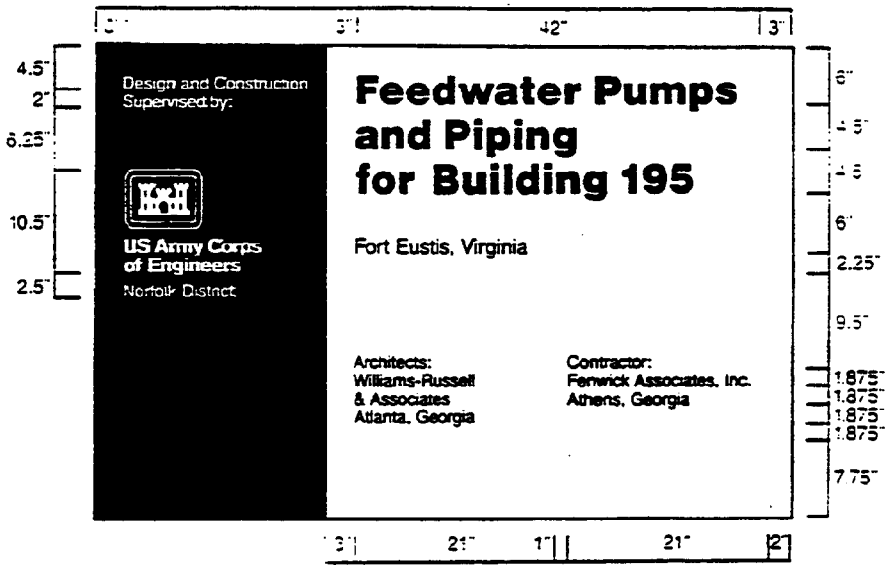

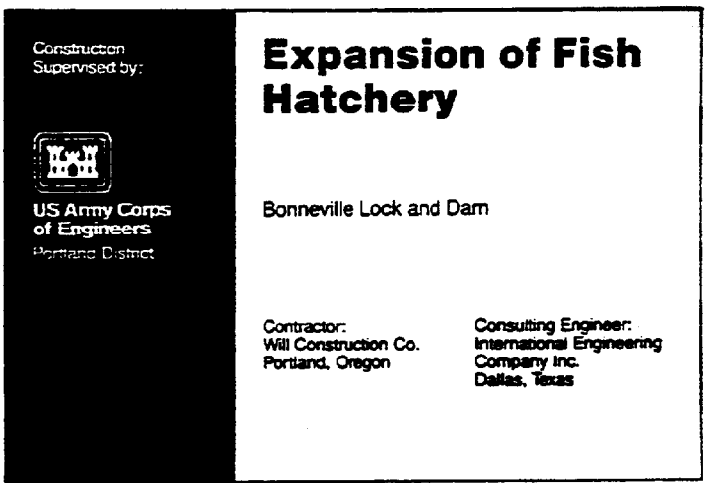

Panels are fabricated using HDO plywood with dimensional lumber uprights and bracing. The sign faces are non-reflective vinyl.

All legend sare to be die-cut or computer-cut in the sizes and typefaces specified and applied to the white panel backgorund following the graphic formats shown on pages 16.2-3. The Communications Red panel on the left side of the construction project sign with Corps signature (reverse version) is screen printed onto the white background.

Sign Type	Legend Size	Panel Size	Post Size	Specification Code	Mounting Height	Color Bkg/Lgd
CID-01	various	4" x 6"	4" x 4"	HDO-3	48"	WH-RD/BK

Each contractor's safety record is to be posted on Corps managed or supervised construction projects.

The graphic format, color, size and typefaces used on the sign are to be reproduced exactly as specified below. The title with First Aid logo in the top section of the sign, and the performance record captions are standard for all signs of this type. Legend Groups 2 and 3 below identify the project and the contractor and are to be placed on the sign as shown.

Safety record numbers are mounted on individual metal plates and are screw-mounted to the background to allow for daily revisions to posted safety performance record.

Legend Group 1: Standard two-line title "Safety is a Job Requirement", with (8" od.) Safety Green First Aid logo. Color: To match PMS 347
Typeface: 3" Helvetica Bold
Color: Black

Legend Group 2: One- to two-line project title legend describes the work being done under this contract and name of host project.
Color: Black
Typeface: 1.5" Helvetica Regular
Maximum line length: 42"

Legend Group 3: One- to two-line identification: name of prime contractor and city, state address.
Color: Black
Typeface: 1.5" Helvetica Regular
Maximum line length: 42"

Legend Group 4: Standard safety record captions as shown.
Color: Black
Typeface: 1.25" Helvetica Regular

Replaceable numbers are to be mounted on white .060 aluminum plates and screw-mounted to background.
Color: Black
Typeface: 3" Helvetica Regular
Plate size: 2.5" x .5"

All typography is flush left and rag right, upper and lower case with initial capitals only as shown. Letter- and word-spacing to follow Corps standards.

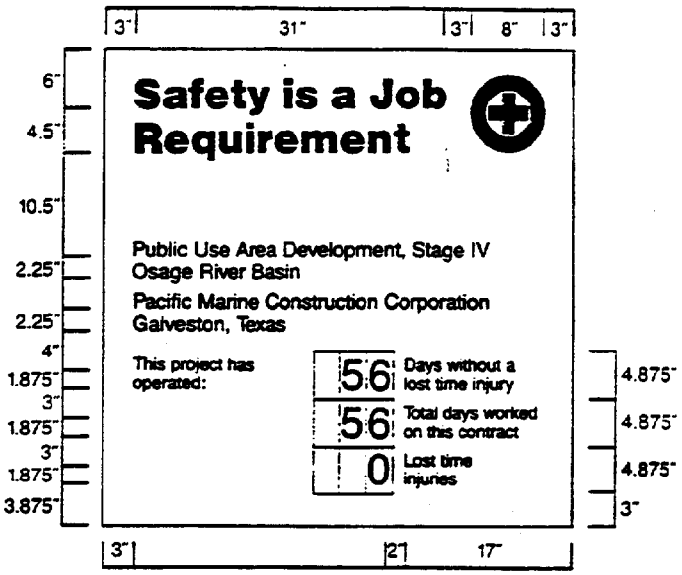

Sign Type	Legend Size	Panel Size	Post Size	Specification Code	Mounting Height	Color Bkg/Lgd
CID-02	various	4" x 4"	4" x 4"	HDO-3	48"	WH/BK-GR

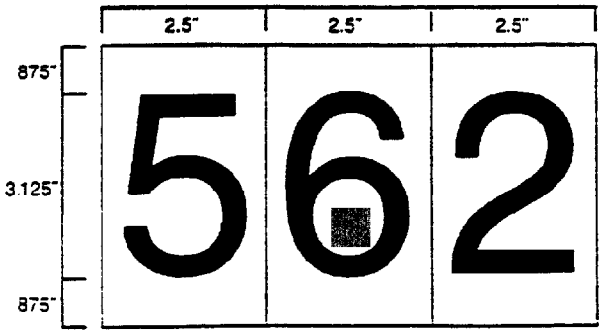

00830-2

All Construction Project Identification signs and Safety Performance signs are to be fabricated and installed as described below, except that Project signs for U.S. Air Force shall be fabricated and installed as shown on page 16.2.

The sign panels are to be fabricated from .75" High Density Overlay Plywood.

Sign graphics to be prepared on a white non-reflective vinyl film with positionable adhesive backing.

All graphics except for the Communications Red background with Corps signature on the project sign are to be die-cut or computer-cut non-reflective vinyl, pre-spaced legends prepared in the sizes and typefaces specified and applied to the background panel following the graphic formats shown on pages 16.2-3.

The 2' x 4' Communications Red panel (to match PMS-032) with full Corps signature (reverse version) is to be screen printed on the white background. Identification of the District or Division may be applied under the signature with white cut vinyl letters prepared to Corps standards. Large scale reproduction artwork for the signature is provided on page 4.8 (photographically enlarge from 6.875" to 10.5").

Drill and insert six (6) .375" T-nuts from the front face of the HDO sign panel. Position holes as shown. Flange of T-nut to be flush with sign face.

Apply graphic panel to prepared HDO plywood panel following manufacturers' instructions.

Sign uprights to be structural grade 4" x 4" treated Douglas Fir or Southern Yellow Pine, No.1 or better. Post to be 12' long. Drill six (6) .375" mounting holes in uprights to align with T-nuts in sign panel. Countersink (.5") back of hole to accept socket head cap screw (4" x .375").

Assemble sign panel and uprights. Imbed assembled sign panel and uprights in 4' hole. Local soil conditions and/or wind loading may require bolting additional 2" x 4" struts on inside face of uprights to reinforce installation as shown.

Shown below the mounting diagram is a panel layout grid with spaces provided for project information. Photocopy this page and use as a worksheet when preparing sign legend orders.

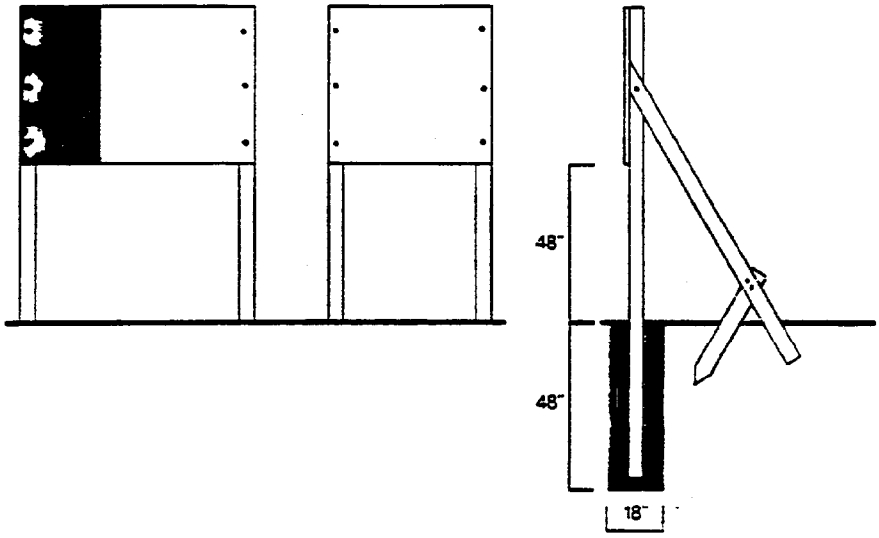

Construction Project Sign
Legend Group 1: Corps Relationship

1. _____
2. _____

Legend Group 2: Division/District Name

1. _____
2. _____

Legend Group 3: Project Title

1. _____
2. _____
3. _____

Legend Group 4: Facility Name

1. _____
2. _____

Legend Group 5a: Contractor/A&E

1. _____
2. _____
3. _____
4. _____
5. _____

Legend Group 5b: Contractor/A&E

1. _____
2. _____
3. _____
4. _____
5. _____

Safety Performance Sign
Legend Group 1: Project Title

1. _____
2. _____

Legend Group 2: Contractor/A&E

1. _____
2. _____

THIS PAGE HAS BEEN LEFT INTENTIONALLY BLANK

Regions for the Construction Equipment Ownership and Operating Expense Schedule

Vol. No.	Stock No.	Cost
I	EP 1110-1-8	$26.00
II	EP 1110-1-8	$26.00

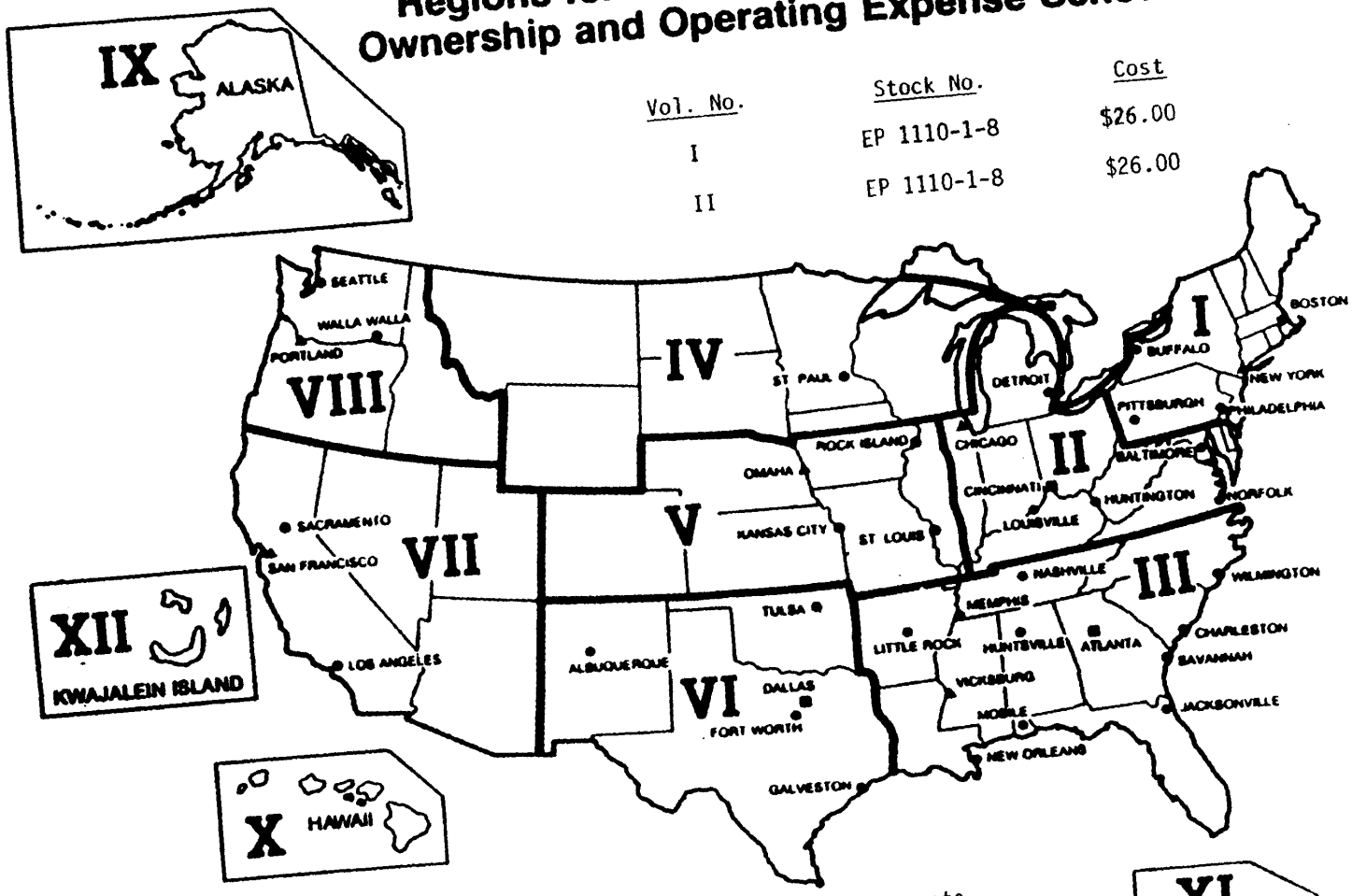

Copies of Schedule available from: Superintendent of Documents
P.O. Box 371954
Pittsburgh, PA 15250-7954

Phone: 202-512-1800

THIS PAGE HAS BEEN LEFT INTENTIONALLY BLANK

Bridge Paint Sampling
Analytical Scope of Work and Analytical Results

1. The objective of the Bridge and Dam paint sampling was to determine the type and concentrations of metals in bridge paint at the following bridges:

2. Chemical sampling was conducted on Feb 28-29, 1996 and March 1, 1996. Samples were collected with

All paint chip samples were tested for the following parameters.

3. The analytical results were reported in letter format to Ms. Erika McCormick at the USACE Philadelphia District. The report contained QA/QC data as well as analytical methods, results and any other pertinent paperwork.

Table 1 Sampling Date:
Bridge and Dam Paint Sampling Program Feb. 28-29, 1996 and Mar. 1,1996

Sample concentrations are in **Wt %** (1 % is equivalent to 10000 mg/Kg)

Sample Location	Iron (Fe)	Zinc (Zn)	Lead (PB)	Chromium (Cr)	Titanium (Ti)	Comments
Beltzville Dam						
BVTE01	5.2	0.77	1.6	ND	ND	Intact / Diff. getting to steel struc. Incomplete sampling.
BVTE02	26	0.31	13.5	ND	ND	Chipping & Rusting/ complete sampling.
BVTW03	13.5	0.85	11.0	ND	ND	Chipping & Rusting/ complete sampling.
BVSW01	0.5	0.7	29.0	ND	ND	Intact / complete sampling, picked up large chip off ground.
BVSW02	0.6	0.7	22.0	ND	ND	Intact / complete sampling, very large chip under girder.
Walter Dam						
WDTS01	0.8	1.1	44.0	ND	ND	Chipping / complete sampling, sampled off of electrical box.
WDTS02	5.0	ND	38.0	ND	ND	Chipping / incomplete sampling, so composited two areas.
WDTS03	0.8	ND	28.0	ND	ND	Chipping / complete sampling.
Blue Marsh Dam						
BMTW01	14.0	0.9	8.2	ND	ND	Intact / difficult getting complete sampling, bridge in good

						condition, composite.
Chesapeake City Bridge						
CCBW01	14.0	0.12	9.5	ND	ND	Chipping & Rusting/ complete sampling.
CCBE01	20.0	0.15	7.2	ND	ND	Chipping & Rusting/ complete sampling.
Summit Bridge						
STBS01	56.0	0.08	1.1	ND	ND	Chipping & Rusting/ complete sampling.
STBS02	60.0	ND	0.66	ND	ND	Chipping & Rusting/ complete sampling.
St. Georges Bridge						
SGBW01	35.0	0.20	8.1	ND	ND	Chipping & Rusting/ complete sampling. Sample contained a lot of rust.
SGBC02	5.8	0.37	17.0	ND	ND	Chipping/ complete sampling.
Delaware City Bridge						
DCBN01	46.0	0.09	0.08	ND	ND	Chipping/ complete sampling.
Reedy Point Bridge						
RPBW01	32.0	0.5	0.05	0.9	2.0	Chipping/ complete sampling.
RPBE02	12.0	9.6	13.0	ND	ND	Chipping/ complete sampling.
DUP-RPBE02	50.0	3.7	11.2	ND	ND	Chipping/ complete sampling.

ND = Not Detected

PROCEDURE:

The history of each bridge will be determined. Samples will be obtained from accessible portions of each bridge. Samples will be split and one-half will be sent to the US EPA Region I Laboratory for metals analysis. The balance will be retained by Geotechnical Section for subsequent analysis by portable instrumentation.

Sampling Procedure

- A two-inch square area will be marked out on the surface to be sampled using a pencil or marker. The line will be cut using razor blade contained within a safety handle.
- The resulting paint chip will be removed using a hand chisel and hammer as necessary. Every effort will be made to remove the paint down to the bare metal.
- The sample will be placed into a plastic sample bag and labeled using the labeling scheme described below.
- The sample will be split upon return to the office. As indicated above, on-half will be sent for analysis and the balance will be retained.
- There will be a 10% duplicate (or at least one sample per structure) sampling schedule for quality assurance.

Labeling Scheme

The following labeling scheme will be utilized:

• *First three letters indicate structure;*	*Sample Date:*
• Blue Marsh Dam Tower Bridge - BMT;	Feb. 29, 1996
• Beltzville Dam Tower Bridge - BVT;	Feb. 28, 1996
• Beltzville Spill Way Bridge - BMS;	Feb. 28, 1996
• Walter Dam Tower Bridge - WDT.	Feb. 28, 1996
• Chesapeake City Bridge - CCB;	Feb. 28, 1996
• Delaware City Bridge - DCB;	Mar. 1, 1996
• Reedy Point Bridge - RPB;	Mar. 1, 1996
• St. Georges Bridge - SGB;	Mar. 1, 1996
• Summit Bridge - STB;	Mar. 1, 1996

- The next letter will indicate side of the structure;
  - N - North
  - S - South
  - E - East
  - W - West

- The next two numerals (01 - 99) indicate the sample number.

ANALYSIS

Metal content will be determine using XRF by the US EPA Region I Laboratory in Lexington, MA. Subsequent analysis may be conducted using a Niton 700 Multi-Analyzer instrument following training by the manufacturer. A statistical comparison of the methods will be conducted in aid in determining the feasibility of using the Niton instrument in the field to rapidly assessment painted structures, dust, air filters and wipe samples for metals content.

INFORMATION USE

Laboratory Results

The information obtained will be used in preparation of paint abatement specifications for future projects. This information will enable the contractor to more accurately judge the exposures to which the employees and environment could be exposed and to determine the proper waste classification.

Field Instrumentation Results

The comparison of laboratory versus field instrument results will enable the District to determine if the field instrument represents a viable alternative to laboratory analysis. If the results are positive, the use of the field instrument could represent a savings in costs by reducing or eliminating sample laboratory analysis costs and shipping costs. Additionally, there would be a time savings by conducting the analysis on site. More samples could be taken and areas of metal content variability could be reinvestigated.

The use of the field instrument would permit an increase in the health oversight during a project. By sampling air filters and/or wipe samples, the project manager could verify that health and safety procedures are effective and, in case of an incident (e.g., containment failure) clean up effectiveness could be rapidly determined. Real time information, as opposed to 24 or 48 hour turn around results, will greatly enhance the health and safety of paint abatement projects.

Scott A. Fritzinger, PE
Chief Geotechnical Section

THIS PAGE HAS BEEN LEFT INTENTIONALLY BLANK

PROJECT TABLE OF CONTENTS

DIVISION 01 - GENERAL REQUIREMENTS

01010 SUMMARY OF WORK
01060 SAFETY
01090 SOURCES FOR REFERENCE PUBLICATIONS
01300 SUBMITTAL PROCEDURES
01380 CONSTRUCTION PHOTOGRAPHS
01430 ENVIRONMENTAL PROTECTION
01440 CONTRACTOR QUALITY CONTROL
01500 TEMPORARY CONSTRUCTION
01570 TRAFFIC CONTROL
01576 PROTECTION OF MARINE NAVIGATION
01700 AS-BUILT DRAWINGS

DIVISION 02 - SITE WORK

02430 BRIDGE DRAINAGE REPAIRS
02451 GUARDRAIL MODIFICATIONS
02452 BRIDGE RAILING REPAIRS
02577 PAVEMENT AND SIDEWALK MARKINGS
02935 SEEDING AND MULCHING

DIVISION 03 - CONCRETE

03360 CONCRETE REPAIRS
03361 APPROACH ROADWAY REPAIRS
03600 BRIDGE PIER CRACK REPAIR

DIVISION 05 - METALS

05120 STRUCTURAL STEEL REPAIRS
05125 WELD REMOVAL AND DYE PENETRANT TESTING

DIVISION 06 - WOODS & PLASTICS

06110 TIMBER FENDER REPAIRS

DIVISION 07 - THERMAL & MOISTURE PROTECTION

07900 PREFORMED JOINT SEALS

DIVISION 09 - FINISHES

09870 PROTECTIVE COATING FOR BRIDGE BEARINGS
09900 PAINTING

-- End of Project Table of Contents --

THIS PAGE HAS BEEN LEFT INTENTIONALLY BLANK

SECTION 01010

SUMMARY OF WORK

PART 1 GENERAL

1.1 SCOPE

This section presents a general description of the work to be accomplished under this contract at the Delaware City and Reedy Point Bridges located on U.S. Route 9 in Delaware City, Delaware

1.2 DESCRIPTION OF WORK

The contract work consists of, but is not limited to, the following items of work:

1.2 Delaware City Bridge

a. Provide all traffic control in accordance with a Contractor-prepared, DelDOT approved traffic control plan as required to perform the contract work.

b. Repair timber fenders.

c. Repair concrete spalls in the north and south approach roadways, approach slabs and sidewalks.

d. Repair unsound concrete on the north and south piers at the waterline and on the control house.

e. Remove deteriorated sidewalk and curb and replace with new sidewalk, curb and pedestrian ramp.

f. Repair crack on the underside of roadway dam support channels.

g. Replace joint compression seals in the sidewalk girder openings.

h. Provide joint sealant between asphalt and concrete slab.

i. Mark pavement and curb face.

1.3 Reedy Point Bridge

a. Provide all traffic control in accordance with a Contractor-prepared, DelDOT approved traffic control plan as required to perform the contract work.

b. Repair spalled and deteriorated concrete in the bridge parapets, overhangs, sidewalks and substructure.

c. Repair concrete spalls and joints in the north and south approach roadways.

d. Clean and seal a cracks in the approach roadways and shoulders.

e. Modify guardrail at the approach roadways.

f. Repair areas of bridge railing.

g. Remove cracked tack welds and perform dye penetrant tests.

h. Provide protective coating and lubricant on bridge bearings.

i. Repair cracks in bridge piers.

j. Replace fasteners in bridge superstructure.

k. Remove deteriorated portions of steel deck forms.

l. Repair and modify existing bridge drainage system.

m. Modify ladders and cages at Piers N1 and S1.

o. Mark pavement and sidewalk.

p. Repair walkway support angles, channels and handrails.

q. Drill drain holes.

r. Replace neoprene joint seals.

s. Repair concrete block slope protection under north and south abutments.

1.4 REFERENCE STANDARDS

Except where a specific issue is indicated as a reference standard within these specifications, provide materials, equipment and workmanship confirming to the latest edition, revision, supplement and/or amendment thereto, in effect on the date of bid opening.

PART 2 PRODUCTS (Not Applicable)

PART 3 EXECUTION (Not Applicable)

SECTION 01060

SAFETY

PART 1 GENERAL

1.1 REFERENCES

The publications listed below form a part of this specification to the extent referenced. The publications are referred to in the text by basic designation only.

U.S. ARMY CORPS OF ENGINEERS (COE)

EM 385-1-1	(1996) Safety and Health Requirements Manual

U.S. ARMY CORPS OF ENGINEERS (PHILADELPHIA DISTRICT)

Liberty from Accidents Program	(1996) Philadelphia District Awards Program

1.2 SUBMITTALS

Government approval is required for submittals with a "GA" designation; submittals having an "FIO" designation are for information only. The following shall be submitted in accordance with Section 01300 SUBMITTAL PROCEDURES:

SD-08 Statements

Qualifications; GA

Name and qualifications of the Contractor's proposed safety representative.

Accident Prevention Plan; GA

An accident prevention plan, prepared by the prime Contractor for the specific work, implementing in detail the pertinent requirements of EM 385-1-1 shall be submitted for approval prior to the start of work. A suggested format for the accident prevention plan is included in EM 385-1-1, Appendix A. The plan shall be prepared for all sites and shall include, but is not limited to, the topic areas listed in Appendix A therein and the requirements of the Paragraph entitled: SAFETY AND HEALTH PROVISIONS. Each topic shall be developed in a concise manner to include management and operational aspects.

Activity Phase Hazard Analysis Plan; GA

Prior to beginning each major phase of work, an activity hazard analysis (phase plan) shall be prepared by the Contractor for that phase of work and submitted for approval. The suggested format for the analysis is contained in Figure 1-1 of EM 385-1-1. A phase is defined as an operation involving a type of work presenting hazards not experienced in previous operations or where a new subcontractor or work crew is to perform work. The analysis shall address the hazards for each activity performed in the phase and shall present the procedures and safeguards necessary to eliminate the hazards or reduce the risk to an acceptable level.

SD-09 Reports

Safety Meeting Reports; FIO

Outline reports of all weekly and monthly safety meeting shall be submitted.

Accident Reports; FIO

A written report for all accidents utilizing ENG FORM 3394 shall be submitted within 24 hours following such accidents.

OSHA 200 Log; FIO

Contractor's OSHA 200 Log of Injuries shall be submitted monthly.

Floating Plant Inspection; GA

A copy of the annual inspection of all plants, not subject to Coast Guard inspection, shall be submitted prior to start of work.

1.3 GENERAL

Worker safety is of paramount importance. The Contractor shall comply with the Contract Clause entitled: ACCIDENT PREVENTION, EM 385-1-1, the Philadelphia District's Liberty from Accidents Program, and all other requirements as specified herein.

PART 2 PRODUCTS (Not Applicable)

PART 3 EXECUTION

3.1 SAFETY PROGRAM

EM 385-1-1 and all subsequent revisions referred to in the Contract Clause entitled: ACCIDENT PREVENTION of this contract, are hereby supplemented as follows:

a. The Contractor shall designate an employee responsible for overall supervision of accident prevention activities. Such duties shall include: (1) assuring applicable safety requirements are incorporated in work methods and (2) inspecting the work to ensure that daily safety measures and instructions are implemented and documented. The proposed safety representative's name and qualifications shall be submitted in writing for approval by the Contracting Officer. This individual shall have prior experience as a safety representative or be able to demonstrate familiarity and understanding of the safety requirements over a prescribed trial period. The safety representative shall have the authority to act on behalf of the Contractor's general management to take whatever action is necessary to assure compliance with safety requirements. The safety representative is required to be on the site when work is being performed in accordance with EM 385-1-1.

b. Prior to commencement of any work at the job site, a preconstruction safety meeting will be held between the Contractor's safety representative and the Contracting Officer to discuss the Contractor's safety program and to review the Accident Prevention Plan and Activity Phase Hazard Analysis Plan for the first phase of work.

c. Subsequent jobsite safety meetings shall be held as follows:

(1) A safety meeting shall be held at least once a month, documented with subject and attendees, for all supervisors on the project to review past activities, to plan ahead for new or changed operations and to establish safe working procedures to anticipated hazards. An outline report of each monthly meeting shall be submitted to the Contracting Officer.

(2) At least one safety meeting shall be conducted weekly, or whenever new crews begin work, by the appropriate field supervisors or foremen for all workers. An outline report of the meeting giving date, time, attendance, subjects discussed and who conducted the meeting shall be prepared and furnished to the Contracting Officer.

3.2 PHILADELPHIA DISTRICT LIBERTY FROM ACCIDENTS PROGRAM

The Philadelphia District Liberty from Accidents Program is hereby incorporated as part of these specifications. The Liberty from Accidents Program rewards Contractors who exceed safety standards. The program provides local and District-wide awards on a quarterly and annual basis.

a. The Contractor will be evaluated for awards and the final performance evaluation in safety on the frequency rate for the project. The frequency rate is calculated by the following equation: frequency = (number of lost time accidents x 200,000) divided by the number of man-hours for the project. The Contractor shall have a proactive safety plan as outlined in the Liberty from Accidents Program.

b. The Contractor evaluation procedure for the safety category shall be as follows:

RATING	CONTRACTOR FREQUENCY RATE
Outstanding	Less than or equal to 0.25.
Above Average	Greater than 0.25 but less than or equal to 0.75.
Satisfactory	Greater than 0.75 but less than or equal to 0.84.
Marginal	Greater than 0.84 but less than or equal to 1.95.
Unsatisfactory	Greater than 1.95.

Extenuating circumstances will be considered to change the safety rating in limited situations.

3.3 ACCIDENTS

Chargeable lost time accidents are to be investigated by both the Contractor and the Contracting Officer.

3.3.1 Accident Reporting

EM 385-1-1 and the Contract Clause entitled: ACCIDENT PREVENTION are supplemented as follows: The prime Contractor shall report on ENG FORM 3394, provided by the Contracting Officer's Representative, all injuries to employees or to subcontractor employee, and all damage to property and/or equipment in excess of $2,000 per incident. Verbal notification of such

accidents shall be made to the Contracting Officer within 8 hours of occurrence. A written report utilizing ENG FORM 3394 shall be submitted to the Contracting Officer within 24 hours following such accidents. The report shall include the following:

a. A description of the circumstances leading up to the accident, the cause of the accident, and corrective measures taken to prevent recurrence.

b. A description of the injury and name and location of the medical facility rendering examination and treatment.

c. A statement as to whether or not the employee was permitted to return to work after examination and treatment by the medical facility, and if not, an estimate or statement of the number of days lost from work. If there have been days lost from work, the employee must be re-examined and declared fit to resume work as of the date of the report.

3.4 OSHA REQUIREMENTS

3.4.1 OSHA 200 Log

A copy of the Contractor's OSHA 200 Log of Injuries shall be submitted in accordance with the Paragraph entitled: SUBMITTALS.

3.4.2 OSHA Inspections

The Contractor shall immediately notify the Contracting Officer when an OSHA Compliance Official (Federal or State representative) presents credentials and informs the Contractor that the workplace will be inspected for OSHA compliance. The Contractor shall also notify the Contracting Officer upon determination that an exit interview will take place upon completion of the OSHA inspection.

3.5 MEASUREMENT AND PAYMENT

No separate measurement or payment will be made for the work specified in this section and all costs in connection therewith shall be included in the costs of all the bid items.

-- End of Section --

SECTION 01090

SOURCES FOR REFERENCE PUBLICATIONS

PART 1 GENERAL

1.1 REFERENCES

Various publications are referenced in other sections of the specifications to establish requirements for the work. These references are identified in each section by document number, date and title. The document number used in the citation is the number assigned by the sponsoring organization, e.g. UL 1 (1993; Rev thru Jan 1995) Flexible Metal Conduit. However, when the sponsoring organization has not assigned a number to a document, an identifying number has been assigned for convenience, e.g. UL's unnumbered 1995 edition of their Building Materials Directory is identified as UL-01 (1995) Building Materials Directory. The sponsoring organization number (UL 1) can be distinguished from an assigned identifying number (UL-1) by the dash mark (-).

1.2 ORDERING INFORMATION

The addresses of the organizations whose publications are referenced in other sections of these specifications are listed below, and if the source of the publications is different from the address of the sponsoring organization, that information is also provided. Documents listed in the specifications with numbers which were not assigned by the sponsoring organization should be ordered from the source by title rather than by number.

AMERICAN ASSOCIATION OF STATE HIGHWAY AND TRANSPORTATION OFFICIALS (AASHTO)

444 N. Capital St., NW, Suite 249
Washington, DC 20001
Ph: 202-624-5800
Fax: 202-624-5806

AMERICAN CONFERENCE OF GOVERNMENTAL INDUSTRIAL HYGIENISTS (ACGIH)

1330 Kemper Meadow Dr.
Cincinnati, OH 45240
Ph: 513-742-2020
Fax: 513-742-3355

AMERICAN INSTITUTE OF STEEL CONSTRUCTION (AISC)

One E. Wacker Dr., Suite 3100
Chicago, IL 60601-2001
Ph: 312-670-2400
Fax: 312-670-5403

AMERICAN NATIONAL STANDARDS INSTITUTE (ANSI)

11 West 42nd St
New York, NY 10036

Ph: 212-642-4900
Fax: 212-302-1286
Internet: http://www.ansi.org/

AMERICAN SOCIETY FOR TESTING AND MATERIALS (ASTM)

100 Barr Harbor Drive
West Conshohocken, PA 19428-2959
Ph: 610-832-9500
Fax: 610-832-9555
Internet: http://www.astm.org

AMERICAN WELDING SOCIETY (AWS)

550 N.W. LeJeune Road
Miami, FL 33126
Ph: 305-443-9353
Fax: 305-443-7559

AMERICAN WOOD-PRESERVERS' ASSOCIATION (AWPA)

P.O. Box 286
Woodstock, MD 21163-0286
Ph: 410-465-3169
Fax: 410-465-3195

CODE OF FEDERAL REGULATIONS (CFR)

Order from:
Government Printing Office
Washington, DC 20402
Ph: 202-512-1800
Fax: 202-275-7703
Internet: http://www.pls.com:8001/his/cfr.html

CORPS OF ENGINEERS (COE)

Order from:
U.S. Army Engineer Waterways Experiment Station
ATTN: Technical Report Distribution Section, Services Branch, TIC
3909 Halls Ferry Rd.
Vicksburg, MS 39180-6199
Ph: 601-634-2355
Fax: 601-634-2506

DELAWARE DEPARTMENT OF TRANSPORTATION (DelDOT)

FEDERAL HIGHWAY ADMINISTRATION (FHWA)

Office of Highway Safety (HHS-31)
400 Seventh St., SW
Washington, DC 20590-0001
Ph: 202-366-0411
Fax: 202-366-2249
Order from:
Government Printing Office

Superintendent of Documents
Washington, DC 20402
Ph: 202-783-3238

FEDERAL SPECIFICATIONS (FS)

Order from:
Standardization Documents Order Desk
Bldg 4D
700 Robbins Av
Philadelphia, PA 19111-5094
Ph: 215-697-2179
Fax: 215-697-2978

FEDERAL STANDARDS (FED-STD)

Order from:
Standardization Documents Order Desk
Bldg 4D
700 Robbins Av
Philadelphia, PA 19111-5094
Ph: 215-697-2179
Fax: 215-697-2978

SOUTHERN PINE INSPECTION BUREAU (SPIB)

4709 Scenic Highway
Pensacola, FL 32504-9094
Ph: 904-434-2611
Fax: 904-433-5594

STEEL STRUCTURES PAINTING COUNCIL (SSPC)

40 24th Street, 6th Floor
Pittsburgh, PA 15222-4643
Ph: 412-281-2331
Fax: 412-281-9992

-- End of Section --

THIS PAGE HAS BEEN LEFT INTENTIONALLY BLANK

SECTION 01300

SUBMITTAL PROCEDURES

PART 1 GENERAL

1.1 SUMMARY (Not Applicable)

1.2 REFERENCES (Not Applicable)

1.1 SUBMITTAL CLASSIFICATION

Submittals are classified as follows:

1.1.1 Government Approved

Governmental approval is required for extensions of design, critical materials, deviations, equipment whose compatibility with the entire system must be checked, and other items as designated by the Contracting Officer. Within the terms of the Contract Clause entitled: SPECIFICATIONS AND DRAWINGS FOR CONSTRUCTION, they are considered to be "shop drawings."

1.1.2 Information Only

All submittals not requiring Government approval will be for information only. They are not considered to be "shop drawings" within the terms of the Contract Clause referred to above.

1.2 APPROVED SUBMITTALS

The approval of submittals by the Contracting Officer shall not be construed as a complete check, but will indicate only that the general method of construction, materials, detailing and other information are satisfactory. Approval will not relieve the Contractor of the responsibility for any error which may exist, as the Contractor under the CQC requirements of this contract, is responsible for the dimensions and design of adequate connections, details and the satisfactory construction of all work. After submittals have been approved by the Contracting Officer, no resubmittal for the purpose of substituting materials or equipment will be given consideration unless accompanied by an explanation of why a substitution is necessary.

1.3 DISAPPROVED SUBMITTALS

The Contractor shall make all corrections required by the Contracting Officer and promptly furnish a corrected submittal in the form and number of copies as specified for the initial submittal. If the Contractor considers any correction indicated on the submittals to constitute a change to the contract, notice in accordance with the Contract Clause entitled: CHANGES shall be given promptly to the Contracting Officer.

1.4 WITHHOLDING OF PAYMENT

Payment for materials incorporated in the work will not be made if required approvals have not been obtained.

PART 2 PRODUCTS (Not Applicable)

PART 3 EXECUTION

3.1 GENERAL

The Contractor shall submit all items listed on the Submittal Register (ENG Form 4288) or specified in the other sections of these specifications. The Contracting Officer may request submittals in addition to those listed when deemed necessary to adequately describe the work covered in the respective sections. Units of weights and measures used on all submittals shall be the same as those used in the contract drawings. Submittals shall be made in the respective number of copies and to the respective addresses set forth below. Each submittal shall be complete and in sufficient detail to allow ready determination of compliance with the contract requirements. Prior to submittal, all items shall be checked and approved by the Contractor and each respective transmittal form (ENG Form 4025) shall be signed and dated certifying that the accompanying submittal complies with the contract requirements. Proposed deviations from the contract requirements shall be clearly identified. Submittals shall include items such as: Contractor's, manufacturer's, or fabricator's drawings; descriptive literature including (but not limited to) catalog cuts, diagrams, operating charts or curves; test reports; test cylinders; samples; O&M manuals (including parts list); certifications; warranties; and other such required submittals. Submittals requiring Government approval shall be scheduled and made prior to the acquisition of the material or equipment covered thereby.

3.2 SUBMITTAL REGISTER (ENG FORM 4288)

Attached to this section is a Submittal Register (ENG Form 4288) listing each item of equipment and material for which submittals are required by the specifications. Columns "d" thru "r" have been completed by the Government. The Contractor shall complete columns "b" and "s" through "t". The Contractor shall review, complete and submit, in triplicate, the completed register listing all submittals and dates, to the Contracting Officer at the pre-dredging coordination meeting. In addition to those items listed on ENG Form 4288, the Contractor shall furnish submittals for any deviations from the plans and specifications at the pre-dredging coordination meeting. The scheduled need date shall be recorded on the register for each item for control purposes. The approved submittal register will become the scheduling document and will be used to control submittals throughout the life of the contract. Scheduling shall be coordinated with the approved construction progress chart. The Contractor's CQC system manager shall review the listing at least every 30 days and take appropriate action to maintain an effective system. Copies of updated or corrected listings shall be submitted to the Contracting Officer at least every 60 days, in triplicate. Payment will not be made for any material or equipment which does not comply with contract requirements.

3.3 SCHEDULING

Submittals covering component items forming a system or items that are interrelated shall be scheduled to be coordinated and submitted concurrently. Certifications to be submitted with the pertinent drawings shall be so scheduled. In completing the register, a minimum of 30 calendar days, exclusive of mailing time, shall be allowed for review and approval, or possible resubmittal for all listed submittals. No delays, damages or time extensions will be allowed for time lost in late submittals.

3.4 TRANSMITTAL FORM (ENG FORM 4025)

The transmittal form (ENG Form 4025), attached at the end of this section, shall be used for submitting both Government approved and information only submittals in accordance with the instructions on the reverse side of the form. This form shall be properly completed by filling out all the heading blank spaces and identifying each item submitted. Special care shall be exercised to ensure proper listing of the specification paragraph and/or sheet number of the contract drawings pertinent to the data submitted for each item.

3.5 SUBMITTAL PROCEDURE

Paragraph (g) of the Contract Clause entitled: SPECIFICATIONS AND DRAWINGS FOR CONSTRUCTION, is modified as specified herein. Submittals shall be made to the address set forth below. Submittals shall be made as follows:

3.5.1 Submittals for Contracting Officer Approval

The Contractor shall submit, by the most expedient means, a total of five copies of all submittals listed on the Submittal Register (ENG Form 4288), to the Contracting Officer Representative (COR).

COR mailing address:

US Army Corps of Engineers
Philadelphia District
Attn: CENAP-OP-T
Wanamaker Building
100 Penn Square East
Philadelphia, PA 19107-3390

3.5.2 Deviations

For submittals which include proposed deviations requested by the Contractor, the column "variation" of ENG Form 4025 shall be checked. The Contractor shall set forth in writing the reason for any deviations and annotate such deviations on the submittal. The Government reserves the right to rescind inadvertent approval of submittals containing unnoted deviations.

3.5.2.1 Completion of Work

Upon completing the work under this contract, the Contractor shall furnish one set of prints of all shop drawings as finally approved. These drawings shall show all changes and revisions made up to the time the items covered by the shop drawings are completed and accepted.

3.6 CONTROL OF SUBMITTALS

The Contractor shall carefully control his procurement operations to ensure that each individual submittal is made on or before the Contractor scheduled submittal date shown on the approved "Submittal Register."

3.7 GOVERNMENT APPROVED SUBMITTALS

Upon completion of review of submittals requiring Government approval, the submittals will be identified as having received approval by being so stamped and dated. Three (3) copies of the submittal will be retained by

the Contracting Officer and remaining copies of the submittal will be returned to the Contractor.

3.8 INFORMATION ONLY SUBMITTALS

Normally submittals for information only will not be returned. Approval of the Contracting Officer is not required on information only submittals. These submittals will be used for information purposes. The Government reserves the right to require the Contractor to resubmit any item found not to comply with the contract. This does not relieve the Contractor from the obligation to furnish material conforming to the plans and specifications and will not prevent the Contracting Officer from requiring removal and replacement of nonconforming material incorporated in the work. This does not relieve the Contractor of the requirement to furnish samples for testing by the Government laboratory or check testing by the Government in those instances where the technical specifications so prescribe.

3.8.1 MEASUREMENT AND PAYMENT

No separate measurement or payment will be made for the work specified in this section and all costs in connection therewith shall be included in the costs of all the bid items.

-- End of Section --

SUBMITTAL REGISTER
(ER 415 1-10)

CONTRACT NO.

TITLE AND LOCATION
Reedy Pt. and Delaware City Bridge Repairs

CONTRACTOR

SPECIFICATION SECTION
01060

ACTIVITY NO. a.	TRANS-MITTAL NO. b.	ITEM NO c.	SPECIFICATION PARAGRAPH NUMBER d.	DESCRIPTION OF ITEM SUBMITTED e.	TYPE OF SUBMITTAL: DATA f.	DRAWINGS g.	INSTRUCTIONS h.	SCHEDULES i.	STATEMENTS j.	CERTIFICATES: REPORTS k.	CERTIFICATES: SAMPLES l.	RECORDS n.	O&M MANUALS o.	CLASSIFICATION: INFORMATION ONLY p.	CLASSIFICATION: GOVERNMENT APPROVED q.	REVIEWER r.	CONTRACTOR SCHEDULE DATES: SUBMIT s.	APPROVAL NEEDED BY t.	MATERIAL NEEDED BY u.	CODE v.	CONTRACTOR ACTION: DATE w.	SUBMIT TO GOVERNMENT x.	GOVERNMENT ACTION: CODE y.	DATE z.	REMARKS aa.
			1.2	Qualifications					X						X										
			1.2	Accident Prevention Plan					X						X										
			1.2	Activity Phase Hazard Analysis Plan					X						X										
			1.2	Safety Meeting Reports						X				X											
			1.2	Accident Reports						X				X											
			1.2	OSHA 200 Log						X				X											
			1.2	Floating Plant Inspection						X					X										

SUBMITTAL REGISTER
(ER 415 1-10)

CONTRACT NO.

TITLE AND LOCATION
Reedy Pt. and Delaware City Bridge Repairs

CONTRACTOR

SPECIFICATION SECTION
01380

ACTIVITY NO. a.	TRANS-MITTAL NO. b.	ITEM NO c.	SPECIFICATION PARAGRAPH NUMBER d.	DESCRIPTION OF ITEM SUBMITTED e.	TYPE OF SUBMITTAL: DATA f.	DRAWINGS g.	INSTRUCTIONS h.	SCHEDULES i.	STATEMENTS j.	CERTIFICATES REPORTS k.	CERTIFICATES SAMPLES l.	CERTIFICATES SAMPLES m.	O&M RECORDS n.	O&M MANUALS o.	CLASSIFICATION: INFORMATIONONLY p.	GOVERNMENT APPROVED q.	REVIEWER r.	CONTRACTOR SCHEDULE DATES: SUBMIT s.	APPROVAL NEEDED BY t.	MATERIAL NEEDED BY u.	CODE v.	CONTRACTOR ACTION: DATE w.	SUBMIT TO GOVERNMENT x.	GOVERNMENT ACTION: CODE y.	DATE z.	REMARKS aa.
			1.2	Construction Photographs	X											X	CO									
			1.2	Photography Plan					X							X	CO									

SUBMITTAL REGISTER
(ER 415 1-10)

CONTRACT NO.

TITLE AND LOCATION
Reedy Pt. and Delaware City Bridge Repairs

CONTRACTOR

SPECIFICATION SECTION
01430

ACTIVITY NO. a.	TRANS-MITTAL NO. b.	ITEM NO c.	SPECIFICATION PARAGRAPH NUMBER d.	DESCRIPTION OF ITEM SUBMITTED e.	TYPE OF SUBMITTAL: DATA f.	DRAWINGS g.	INSTRUCTIONS h.	SCHEDULES i.	STATEMENTS j.	REPORTS k.	CERTIFICATES l.	SAMPLES m.	RECORDS n.	O&M MANUALS o.	CLASSIFICATION: INFORMATION ONLY p.	GOVERNMENT APPROVED q.	REVIEWER r.	CONTRACTOR SCHEDULE DATES: SUBMIT s.	APPROVAL NEEDED BY t.	MATERIAL NEEDED BY u.	CODE v.	CONTRACTOR ACTION: DATE w.	SUBMIT TO GOVERNMENT x.	GOVERNMENT ACTION: CODE y.	DATE z.	REMARKS aa.
			1.5	Location of Storage Facilities		X										X	CO									
			1.5	Environmental Protection Plan										X		X	CO									

SUBMITTAL REGISTER
(ER 415 1-10)

CONTRACT NO.

TITLE AND LOCATION
Reedy Pt. and Delaware City Bridge Repairs

CONTRACTOR

SPECIFICATION SECTION
01500

ACTIVITY NO. a.	TRANS-MITTAL NO. b.	ITEM NO c.	SPECIFICATION PARAGRAPH NUMBER d.	DESCRIPTION OF ITEM SUBMITTED e.	TYPE OF SUBMITTAL: DATA f.	DRAWINGS g.	INSTRUCTIONS h.	SCHEDULES i.	STATEMENTS j.	REPORTS k.	CERTIFICATES l.	SAMPLES m.	RECORDS n.	O&M MANUALS o.	CLASSIFICATION: INFORMATION ONLY p.	GOVERNMENT APPROVED q.	REVIEWER r.	CONTRACTOR SCHEDULE DATES: SUBMIT s.	APPROVAL NEEDED BY t.	MATERIAL NEEDED BY u.	CODE v.	CONTRACTOR ACTION: DATE w.	SUBMIT TO GOVERNMENT x.	GOVERNMENT ACTION: CODE y.	DATE z.	REMARKS aa.
			1.4	Temporary Facilities Plan					X							X	CO									
			1.4	Safety Plan					X							X	CO									

SUBMITTAL REGISTER
(ER 415 1-10)

CONTRACT NO.

TITLE AND LOCATION
Reedy Pt. and Delaware City Bridge Repairs

CONTRACTOR

SPECIFICATION SECTION
01570

ACTIVITY NO. a.	TRANS-MITTAL NO. b.	ITEM NO c.	SPECIFICATION PARAGRAPH NUMBER d.	DESCRIPTION OF ITEM SUBMITTED e.	TYPE OF SUBMITTAL: DATA f.	DRAWINGS g.	INSTRUCTIONS h.	SCHEDULES i.	STATEMENTS j.	REPORTS k.	CERTIFICATES l.	SAMPLES m.	O&M MANUALS n.	RECORDS o.	CLASSIFICATION: INFORMATION ONLY p.	GOVERNMENT APPROVED q.	REVIEWER r.	CONTRACTOR SCHEDULE DATES: SUBMIT s.	APPROVAL NEEDED BY t.	MATERIAL NEEDED BY u.	CODE v.	CONTRACTOR ACTION: DATE w.	SUBMIT TO GOVERN-MENT x.	GOVERNMENT ACTION: CODE y.	DATE z.	REMARKS aa.
			1.3	Traffic Control Plan					X						X											
			1.3	Traffic Control Device Certification							X					X	CO									

SUBMITTAL REGISTER
(ER 415 1-10)

CONTRACT NO.

TITLE AND LOCATION
Reedy Pt. and Delaware City Bridge Repairs

CONTRACTOR

SPECIFICATION SECTION
02430

ACTIVITY NO. a.	TRANS-MITTAL NO. b.	ITEM NO c.	SPECIFICATION PARAGRAPH NUMBER d.	DESCRIPTION OF ITEM SUBMITTED e.	TYPE OF SUBMITTAL: DATA f.	DRAWINGS g.	INSTRUCTIONS h.	SCHEDULES i.	STATEMENTS j.	REPORTS k.	CERTIFICATES l.	SAMPLES m.	RECORDS n.	O&M MANUALS o.	CLASSIFICATION: INFORMATION ONLY p.	GOVERNMENT APPROVED q.	REVIEWER r.	CONTRACTOR SCHEDULE DATES: SUBMIT s.	APPROVAL NEEDED BY t.	MATERIAL NEEDED BY u.	CODE v.	CONTRACTOR ACTION: DATE w.	SUBMIT TO GOVERN-MENT x.	GOVERNMENT ACTION: CODE y.	DATE z.	REMARKS aa.
			1.3	Welder Qualifications					X							X	CO									
			1.3	Angles							X					X	CO									
			1.3	Downspout and Drain Pipe							X					X	CO									
			1.3	U-Bolts							X					X	CO									
			1.3	Flexible Coupling							X					X	CO									
			1.3	Paint							X					X	CO									

SUBMITTAL REGISTER
(ER 415 1-10)

CONTRACT NO.

TITLE AND LOCATION
Reedy Pt. and Delaware City Bridge Repairs

CONTRACTOR

SPECIFICATION SECTION
02451

ACTIVITY NO. a.	TRANS-MITTAL NO. b.	ITEM NO c.	SPECIFICATION PARAGRAPH NUMBER d.	DESCRIPTION OF ITEM SUBMITTED e.	TYPE OF SUBMITTAL: DATA f.	DRAWINGS g.	INSTRUCTIONS h.	SCHEDULES i.	STATEMENTS j.	REPORTS k.	CERTIFICATES l.	SAMPLES m.	O&M MANUALS n.	CLASSIFICATION: INFORMATION ONLY p.	GOVERNMENT APPROVED q.	REVIEWER r.	CONTRACTOR SCHEDULE DATES: SUBMIT s.	APPROVAL NEEDED BY t.	MATERIAL NEEDED BY u.	CODE v.	CONTRACTOR ACTION: DATE w.	SUBMIT TO GOVERN-MENT x.	GOVERNMENT ACTION: CODE y.	DATE z.	REMARKS aa.
			1.5	Shop Drawings		X									X	CO									
			1.5	Bridge Railing: Guardrail Materials							X				X	CO									

SUBMITTAL REGISTER
(ER 415 1-10)

CONTRACT NO.

TITLE AND LOCATION
Reedy Pt. and Delaware City Bridge Repairs

CONTRACTOR

SPECIFICATION SECTION
02452

ACTIVITY NO. a.	TRANS-MITTAL NO. b.	ITEM NO c.	SPECIFICATION PARAGRAPH NUMBER d.	DESCRIPTION OF ITEM SUBMITTED e.	TYPE OF SUBMITTAL: DATA f.	DRAWINGS g.	INSTRUCTIONS h.	SCHEDULES i.	STATEMENTS j.	CERTIFICATES k.	REPORTS l.	SAMPLES m.	O&M MANUALS n.	RECORDS o.	CLASSIFICATION: INFORMATION ONLY p.	GOVERNMENT APPROVED q.	REVIEWER r.	CONTRACTOR SCHEDULE DATES: SUBMIT s.	APPROVAL NEEDED BY t.	MATERIAL NEEDED BY u.	CODE v.	CONTRACTOR ACTION: DATE w.	SUBMIT TO GOVERN-MENT x.	GOVERNMENT ACTION: CODE y.	DATE z.	REMARKS aa.
			1.5	Shop Drawings		X										X	CO									
			1.5	Bridge Railing: Guardrail Materials						X						X	CO									

SUBMITTAL REGISTER
(ER 415 1-10)

CONTRACT NO.

TITLE AND LOCATION
Reedy Pt. and Delaware City Bridge Repairs

CONTRACTOR

SPECIFICATION SECTION
02577

ACTIVITY NO. a.	TRANS-MITTAL NO. b.	ITEM NO c.	SPECIFICATION PARAGRAPH NUMBER d.	DESCRIPTION OF ITEM SUBMITTED e.	TYPE OF SUBMITTAL: DATA f.	DRAWINGS g.	INSTRUCTIONS h.	SCHEDULES i.	STATEMENTS j.	REPORTS k.	CERTIFICATES l.	SAMPLES m.	O&M MANUALS n.	CLASSIFICATION: INFORMATION ONLY p.	GOVERNMENT APPROVED q.	REVIEWER r.	CONTRACTOR SCHEDULE DATES: SUBMIT s.	APPROVAL NEEDED BY t.	MATERIAL NEEDED BY u.	CODE v.	CONTRACTOR ACTION: DATE w.	SUBMIT TO GOVERN-MENT x.	GOVERNMENT ACTION: CODE y.	DATE z.	REMARKS aa.
			1.3	Pavement Marking Material							X				X	CO									

SUBMITTAL REGISTER
(ER 415 1-10)

CONTRACT NO.

TITLE AND LOCATION
Reedy Pt. and Delaware City Bridge Repairs

CONTRACTOR

SPECIFICATION SECTION
02935

ACTIVITY NO. a.	TRANS-MITTAL NO. b.	ITEM NO c.	SPECIFICATION PARAGRAPH NUMBER d.	DESCRIPTION OF ITEM SUBMITTED e.	TYPE OF SUBMITTAL: DATA f.	DRAWINGS g.	INSTRUCTIONS h.	SCHEDULES i.	STATEMENTS j.	CERTIFICATES k.	REPORTS l.	SAMPLES m.	RECORDS n.	O&M MANUALS o.	CLASSIFICATION: INFORMATION ONLY p.	GOVERNMENT APPROVED q.	REVIEWER r.	CONTRACTOR SCHEDULE DATES: SUBMIT s.	APPROVAL NEEDED BY t.	MATERIAL NEEDED BY u.	CODE v.	CONTRACTOR ACTION: DATE w.	SUBMIT TO GOVERN-MENT x.	GOVERNMENT ACTION: CODE y.	DATE z.	REMARKS aa.
			1.3	Fertilizer, Seeding and Mulching Materials						X						X	CO									

SUBMITTAL REGISTER
(ER 415 1-10)

CONTRACT NO.

TITLE AND LOCATION
Reedy Pt. and Delaware City Bridge Repairs

CONTRACTOR

SPECIFICATION SECTION
03360

ACTIVITY NO. a.	TRANS-MITTAL NO. b.	ITEM NO c.	SPECIFICATION PARAGRAPH NUMBER d.	DESCRIPTION OF ITEM SUBMITTED e.	TYPE OF SUBMITTAL: DATA f.	DRAWINGS g.	INSTRUCTIONS h.	SCHEDULES i.	STATEMENTS j.	REPORTS k.	CERTIFICATES l.	SAMPLES m.	RECORDS n.	O&M MANUALS o.	CLASSIFICATION: INFORMATION ONLY p.	GOVERNMENT APPROVED q.	REVIEWER r.	CONTRACTOR SCHEDULE DATES: SUBMIT s.	APPROVAL NEEDED BY t.	MATERIAL NEEDED BY u.	CODE v.	CONTRACTOR ACTION: DATE w.	SUBMIT TO GOVERN-MENT x.	GOVERNMENT ACTION: CODE y.	DATE z.	REMARKS aa.
			1.3	Concrete Repair Material	X											X	CO									
			1.3	Epoxy Patching Material	X											X	CO									
			1.3	Joint Sealant	X											X	CO									
			1.3	Curing Material	X											X	CO									
			1.3	Concrete Sidewalk and Curb		X										X	CO									
			1.3	Delivery Tickets					X							X	CO									
			1.3	Concrete Tests						X						X	CO									
			1.3	Concrete Repair Material							X					X	CO									
			1.3	Joint Sealant							X					X	CO									
			1.3	Welded Wire Fabric							X					X	CO									
			1.3	Epoxy Patching Material							X					X	CO									
			1.3	Expansion Hook Bolts							X					X	CO									

SUBMITTAL REGISTER
(ER 415 1-10)

CONTRACT NO.

TITLE AND LOCATION
Reedy Pt. and Delaware City Bridge Repairs

CONTRACTOR

SPECIFICATION SECTION
03361

ACTIVITY NO. a.	TRANS-MITTAL NO. b.	ITEM NO c.	SPECIFICATION PARAGRAPH NUMBER d.	DESCRIPTION OF ITEM SUBMITTED e.	TYPE OF SUBMITTAL: DATA f.	DRAWINGS g.	INSTRUCTIONS h.	SCHEDULES i.	STATEMENTS j.	CERTIFICATES k.	REPORTS l.	SAMPLES m.	RECORDS n.	O&M MANUALS o.	CLASSIFICATION: INFORMATION ONLY p.	GOVERNMENT APPROVED q.	REVIEWER r.	CONTRACTOR SCHEDULE DATES: SUBMIT s.	APPROVAL NEEDED BY t.	MATERIAL NEEDED BY u.	CODE v.	CONTRACTOR ACTION: DATE w.	SUBMIT TO GOVERN-MENT x.	GOVERNMENT ACTION: CODE y.	DATE z.	REMARKS aa.
			1.3	Concrete Repair Material	X											X	CO									
			1.3	Epoxy Patching Material	X											X	CO									
			1.3	Joint Sealant	X											X	CO									
			1.3	Delivery Tickets					X							X	CO									
			1.3	Concrete Tests						X						X	CO									
			1.3	Concrete Repair Material							X					X	CO									
			1.3	Joint Sealant							X					X	CO									
			1.3	Welded Wire Fabric							X					X	CO									
			1.3	Epoxy Patching Material							X					X	CO									

SUBMITTAL REGISTER
(ER 415 1-10)

CONTRACT NO.

TITLE AND LOCATION
Reedy Pt. and Delaware City Bridge Repairs

CONTRACTOR

SPECIFICATION SECTION
03600

ACTIVITY NO. a.	TRANS-MITTAL NO. b.	ITEM NO c.	SPECIFICATION PARAGRAPH NUMBER d.	DESCRIPTION OF ITEM SUBMITTED e.	TYPE OF SUBMITTAL: DATA f.	DRAWINGS g.	INSTRUCTIONS h.	SCHEDULES i.	STATEMENTS j.	REPORTS k.	CERTIFICATES l.	SAMPLES m.	O&M MANUALS n.	CLASSIFICATION: INFORMATION ONLY p.	GOVERNMENT APPROVED q.	REVIEWER r.	CONTRACTOR SCHEDULE DATES: SUBMIT s.	APPROVAL NEEDED BY t.	MATERIAL NEEDED BY u.	CODE v.	CONTRACTOR ACTION: DATE w.	SUBMIT TO GOVERN-MENT x.	GOVERNMENT ACTION: CODE y.	DATE z.	REMARKS aa.
			1.3	Epoxy Adhesive Sealer	X										X	CO									
			1.3	Epoxy Injection Adhesive	X										X	CO									
			1.3	Epoxy Adhesive Sealer							X				X	CO									
			1.3	Epoxy Injection Adhesive							X				X	CO									

SUBMITTAL REGISTER
(ER 415 1-10)

CONTRACT NO.

TITLE AND LOCATION
Reedy Pt. and Delaware City Bridge Repairs

CONTRACTOR

SPECIFICATION SECTION
05120

ACTIVITY NO. a.	TRANS-MITTAL NO. b.	ITEM NO c.	SPECIFICATION PARAGRAPH NUMBER d.	DESCRIPTION OF ITEM SUBMITTED e.	TYPE OF SUBMITTAL: DATA f.	DRAWINGS g.	INSTRUCTIONS h.	SCHEDULES i.	STATEMENTS j.	REPORTS k.	CERTIFICATES l.	SAMPLES m.	RECORDS n.	O&M MANUALS o.	CLASSIFICATION: INFORMATION ONLY p.	GOVERNMENT APPROVED q.	REVIEWER r.	CONTRACTOR SCHEDULE DATES: SUBMIT s.	APPROVAL NEEDED BY t.	MATERIAL NEEDED BY u.	CODE v.	CONTRACTOR ACTION: DATE w.	SUBMIT TO GOVERN-MENT x.	GOVERNMENT ACTION: CODE y.	DATE z.	REMARKS aa.
			1.3	Structural Steel		X										X	CO									
			1.3	Record Drawings		X										X	CO									
			1.3	Drainage Hole Drilling Plan		X										X	CO									
			1.3	Welder Qualifications					X							X	CO									
			1.3	Structural Steel; High Strength Bolts; Nuts; Washers							X					X	CO									
			1.3	High Strength Bolts; Nuts; Washers; Allen Head Bolts								X				X	CO									

SUBMITTAL REGISTER
(ER 415 1-10)

CONTRACT NO.

TITLE AND LOCATION
Reedy Pt. and Delaware City Bridge Repairs

CONTRACTOR

SPECIFICATION SECTION
05125

ACTIVITY NO. a.	TRANS-MITTAL NO. b.	ITEM NO c.	SPECIFICATION PARAGRAPH NUMBER d.	DESCRIPTION OF ITEM SUBMITTED e.	TYPE OF SUBMITTAL: DATA f.	DRAWINGS g.	INSTRUCTIONS h.	SCHEDULES i.	STATEMENTS j.	REPORTS k.	CERTIFICATES l.	SAMPLES m.	O&M MANUALS n.	RECORDS o.	CLASSIFICATION: INFORMATION ONLY p.	GOVERNMENT APPROVED q.	REVIEWER r.	CONTRACTOR SCHEDULE DATES: SUBMIT s.	APPROVAL NEEDED BY t.	MATERIAL NEEDED BY u.	CODE v.	CONTRACTOR ACTION: DATE w.	SUBMIT TO GOVERN-MENT x.	GOVERNMENT ACTION: CODE y.	DATE z.	REMARKS aa.
			1.3	Dye Penetrant Materials	X											X	CO									
			1.3	Work Plan					X							X	CO									
			1.3	Dye Penetrant Testing Qualifications					X							X	CO									
			1.3	Dye Penetrant Testing						X						X	CO									

SUBMITTAL REGISTER
(ER 415 1-10)

CONTRACT NO.

TITLE AND LOCATION
Reedy Pt. and Delaware City Bridge Repairs

CONTRACTOR

SPECIFICATION SECTION
06110

ACTIVITY NO. a.	TRANS-MITTAL NO. b.	ITEM NO c.	SPECIFICATION PARAGRAPH NUMBER d.	DESCRIPTION OF ITEM SUBMITTED e.	TYPE OF SUBMITTAL: DATA f.	DRAWINGS g.	INSTRUCTIONS h.	SCHEDULES i.	STATEMENTS j.	REPORTS k.	CERTIFICATES l.	SAMPLES m.	O&M MANUALS n.	CLASSIFICATION: INFORMATION ONLY p.	GOVERNMENT APPROVED q.	REVIEWER r.	CONTRACTOR SCHEDULE DATES: SUBMIT s.	APPROVAL NEEDED BY t.	MATERIAL NEEDED BY u.	CODE v.	CONTRACTOR ACTION: DATE w.	SUBMIT TO GOVERN-MENT x.	GOVERNMENT ACTION: CODE y.	DATE z.	REMARKS aa.
			1.3	Timber Wales		X									X	CO									
			1.3	Timber Wales; Plates; Fasteners							X				X	CO									

SUBMITTAL REGISTER
(ER 415 1-10)

CONTRACT NO.

TITLE AND LOCATION
Reedy Pt. and Delaware City Bridge Repairs

CONTRACTOR

SPECIFICATION SECTION
07900

ACTIVITY NO. a.	TRANS-MITTAL NO. b.	ITEM NO c.	SPECIFICATION PARAGRAPH NUMBER d.	DESCRIPTION OF ITEM SUBMITTED e.	TYPE OF SUBMITTAL: DATA f.	DRAWINGS g.	INSTRUCTIONS h.	SCHEDULES i.	STATEMENTS j.	CERTIFICATES: REPORTS k.	CERTIFICATES: SAMPLES l.	CERTIFICATES: RECORDS n.	O&M MANUALS o.	CLASSIFICATION: INFORMATION ONLY p.	CLASSIFICATION: GOVERNMENT APPROVED q.	CLASSIFICATION: REVIEWER r.	CONTRACTOR SCHEDULE DATES: SUBMIT s.	CONTRACTOR SCHEDULE DATES: APPROVAL NEEDED BY t.	CONTRACTOR SCHEDULE DATES: MATERIAL NEEDED BY u.	CONTRACTOR ACTION: CODE v.	CONTRACTOR ACTION: DATE w.	CONTRACTOR ACTION: SUBMIT TO GOVERN-MENT x.	GOVERNMENT ACTION: CODE y.	GOVERNMENT ACTION: DATE z.	REMARKS aa.
			1.3	Preformed Compression Seal Material	X										X	CO									
			1.3	Adhesive	X										X	CO									
			1.3	Preformed Compression Seal Material							X				X	CO									
			1.3	Adhesive							X				X	CO									

SUBMITTAL REGISTER
(ER 415 1-10)

CONTRACT NO.

TITLE AND LOCATION
Reedy Pt. and Delaware City Bridge Repairs

CONTRACTOR

SPECIFICATION SECTION
09870

ACTIVITY NO. a.	TRANS-MITTAL NO. b.	ITEM NO c.	SPECIFICATION PARAGRAPH NUMBER d.	DESCRIPTION OF ITEM SUBMITTED e.	TYPE OF SUBMITTAL: DATA f.	DRAWINGS g.	INSTRUCTIONS h.	SCHEDULES i.	STATEMENTS j.	CERTIFICATES k.	REPORTS l.	SAMPLES m.	RECORDS n.	O&M MANUALS o.	CLASSIFICATION: INFORMATION ONLY p.	GOVERNMENT APPROVED q.	REVIEWER r.	CONTRACTOR SCHEDULE DATES: SUBMIT s.	APPROVAL NEEDED BY t.	MATERIAL NEEDED BY u.	CODE v.	CONTRACTOR ACTION: DATE w.	SUBMIT TO GOVERNMENT x.	GOVERNMENT ACTION: CODE y.	DATE z.	REMARKS aa.
			1.3	Protective Coating	X											X	CO									
			1.3	Protective Coating							X					X	CO									

SUBMITTAL REGISTER
(ER 415 1-10)

CONTRACT NO.

TITLE AND LOCATION
Reedy Pt. and Delaware City Bridge Repairs

CONTRACTOR

SPECIFICATION SECTION
09900

ACTIVITY NO. a.	TRANS-MITTAL NO. b.	ITEM NO c.	SPECIFICATION PARAGRAPH NUMBER d.	DESCRIPTION OF ITEM SUBMITTED e.	TYPE OF SUBMITTAL: DATA f.	DRAWINGS g.	INSTRUCTIONS h.	SCHEDULES i.	STATEMENTS j.	REPORTS k.	CERTIFICATES l.	SAMPLES m.	RECORDS n.	O&M MANUALS o.	CLASSIFICATION: INFORMATION ONLY p.	GOVERNMENT APPROVED q.	REVIEWER r.	CONTRACTOR SCHEDULE DATES: SUBMIT s.	APPROVAL NEEDED BY t.	MATERIAL NEEDED BY u.	CODE v.	CONTRACTOR ACTION: DATE w.	SUBMIT TO GOVERN-MENT x.	GOVERNMENT ACTION: CODE y.	DATE z.	REMARKS aa.
			2.1.1	Paint	X											X										
			3.3	Mixing and Thinning			X									X										
			3.4	Application			X									X										
			2.1.1	Paint						X						X										
			2.1.4	Lead							X					X										
			2.1.6	Volatile Organic Compound (VOC) Content							X					X										
			2.1.1	Paint								X				X										

THIS PAGE HAS BEEN LEFT INTENTIONALLY BLANK

SECTION 01380

CONSTRUCTION PHOTOGRAPHS

PART 1 GENERAL

1.1 SUMMARY

The work specified in this section includes construction photographs consisting of prints and slides showing the entire progress of work during the contract period.

1.2 SUBMITTALS

Government approval is required for submittals with a "GA" designation; submittals having an "FIO" designation are for information only. The following shall be submitted in accordance with Section 01300 SUBMITTAL PROCEDURES:

SD-01 Data

Construction Photographs; GA CO

Construction photographs including slides shall be furnished to the Government within 15 days of when they are taken throughout the contract period. One set of prints with accompanying slides and identification information shall be submitted to the Contracting Officer's Representative at the project office. A second set of prints with slides and identification information shall be sent to the Philadelphia District Office at the following address:

U.S. Army Corps of Engineers
Philadelphia District
Design Branch (CENAP-EN-DC)
Wanamaker Building
100 Penn Square East
Philadelphia, PA 19107-3390

SD-08 Statements

Photography Plan; GA CO

The Contractor shall submit for approval each month his photography plan, which shall include the following information: items to be photographed, location of photographs and the time the photographs will be taken.

1.3 QUALITY ASSURANCE

All photography shall be performed by a qualified, established commercial photographer.

1.4 GENERAL REQUIREMENTS

1.4.1 Prints

Prints shall be 5" x 7", color, on single weight paper with smooth surface, glossy finish. Identification information on back of each print shall

include: name and location of project, item/action being photographed, General Contractor, orientation of view, date and time of exposure, and name and address of photographer.

1.4.2 Slides

Slides shall be 35mm, color, with each identified by a number on the slide referenced to a printed listing containing the same identification information as used for the prints.

PART 2 PRODUCTS (Not Applicable)

PART 3 EXECUTION

3.1 PHOTOGRAPHY

A total of 24 photographs shall be taken each month. The Contractor shall submit two(2) color prints and two(2) accompanying mounted slides for each photograph showing the progress of work at the following times during the contract period:

a. Prior to commencement of work the Contractor shall photograph the existing conditions of the work site.

b. During the progress of the work, such as at the start and completion of the definable features of work.

c. After completion of the work the Contractor shall photograph the site from the same locations used to determine the existing conditions prior to construction.

d. Special events throughout the contract period as directed by the Contracting Officer's Representative.

3.2 MEASUREMENT AND PAYMENT

No separate measurement or payment will be made for the work specified in this section and all costs in connection therewith shall be included in the costs of all bid items.

-- End of Section --

SECTION 01430

ENVIRONMENTAL PROTECTION

PART 1 GENERAL

1.1 SUMMARY

This section covers the furnishing of all labor, material and equipment and performing all work required for the protection of the environment during construction operations except for those measures set forth in other sections of these specifications.

1.2 GENERAL

For the purpose of this specification, environmental protection is defined as the retention of the environment in its natural state to the greatest extent possible during project construction and to enhance the natural appearance in its final condition. Environmental protection requires consideration of air, water, and land resources and involves noise, solid waste-management and management of other pollutants. In order to prevent, and to provide for abatement and control of any environmental pollution arising from the construction activities in performance of this contract, the Contractor and his subcontractors shall comply with all applicable Federal, state, and local laws and regulations and shall obtain all necessary permits required by same.

1.3 NOTIFICATION

The Contracting Officer will notify the Contractor in writing of any non-compliance with the aforementioned Federal, state, or local laws or regulations. Such notice, when delivered to the Contractor or his authorized representative at the site of the work, shall be deemed sufficient for the purpose. The Contractor shall, after receipt of such notice, immediately inform the Contracting Officer of proposed corrective action and take such action as may be approved. If the Contractor fails or refuses to comply promptly, the Contracting Officer may issue an order stopping all or part of the work until satisfactory corrective action has been taken. No part of the time lost due to any such stop orders shall be made subject of a claim for extension of time or for excess costs or damages by the Contractor.

1.4 SUBCONTRACTORS

Compliance with the provisions of this section by subcontractors will be the responsibility of the Contractor.

1.5 SUBMITTALS

Government approval is required for submittals with a "GA" designation; submittals having an "FIO" designation are for information only. The following shall be submitted in accordance with Section 01300 SUBMITTAL PROCEDURES:

SD-04 Drawings

Location of Storage Facilities; GA CO

Plans showing storage and other construction facilities shall be submitted for approval of the Contracting Officer.

SD-18 Records

Environmental Protection Plan; GA CO

Prior to commencement of the work, the Contractor shall submit to the Contracting Officer for approval his proposed environmental protection plan. This shall be followed by a meeting with representatives of the Contracting Officer to develop mutual understandings relative to compliance with this provision and administration of the environmental protection program. Approval of the Contractor's plan for environmental protection will not relieve the Contractor of his responsibility for adequate and continuing control of pollutants.

PART 2 PRODUCTS (Not Applicable)

PART 3 EXECUTION

3.1 PROTECTION OF LAND RESOURCES

3.1.1 General

The land resources within the project boundaries and outside the limits of permanent work performed under this contract shall be preserved in their present condition or be restored to a condition after completion of construction that will appear to be natural and not detract from the appearance of the project. The Contractor shall confine his construction activities to areas defined by the plans and specifications. The following additional requirements are intended to supplement the requirements of the Contract Clauses.

3.1.2 Prevention of Landscape Defacement

The Contractor shall not deface, injure, or destroy trees or shrubs, nor remove or cut them without the authority of the Contracting Officer. Ropes, cables, or guys shall not be fastened to or attached to any existing nearby trees for anchorages unless specifically authorized. Where such special emergency use is permitted, it shall be performed in such a manner as to avoid damage to the trees. The Contractor shall in any event be responsible for any damage resulting from such use. Where the possibility exists that trees may be defaced, bruised, injured, or otherwise damaged by the Contractor's equipment or operations, the Contractor shall adequately protect such trees. Stone, earth or other material that is displaced into uncleared areas shall be removed. Monuments and markers shall be protected before construction operations commence.

3.1.3 Restoration of Landscape Damage

Any tree, turfed areas or other landscape feature scarred or damaged by the Contractor's equipment or operations shall be restored to a condition satisfactory to the Contracting Officer. Restoration of scarred and damaged trees shall be performed in an approved manner by experienced workmen. Trees damaged beyond restoration shall be removed and disposed of under requirements for excavation. Trees that are to be removed because of damage shall be replaced at the Contractor's expense by nursery-grown trees of the

same species or a species approved by the Contracting Officer. The size and quality of nursery-grown trees shall also be approved by the Contracting Officer. Any disturbed turfed (grassed) areas shall be seeded and mulched as directed by the Contracting Officer.

3.1.4 Location of Storage Facilities

Contractor's storage and other construction buildings, which are required in the performance of the work, shall be located upon cleared portions of the job site and shall require the written approval of the Contracting Officer. The preservation of the landscape shall be an imperative consideration in the selection of all sites and in the construction of buildings. Where buildings or platforms are constructed on sidehills, the Contracting Officer may require cribbing to be used to obtain level foundations. Benching or leveling of earth may be permitted, depending on the location of the proposed facility.

3.1.5 Post Construction Cleanup or Obliteration

The Contractor shall obliterate all signs of temporary construction facilities, excess materials, or any other vestiges of construction as directed by the Contracting Officer. The area will be restored to near natural conditions which will permit the growth of vegetation thereon.

3.2 RECORDING AND PRESERVING HISTORICAL AND ARCHAEOLOGICAL FINDS

All items having any apparent historical or archaeological interest which are discovered in the course of any construction activities shall be carefully preserved. The Contractor shall leave the archaeological find undisturbed and shall immediately report the find to the Contracting Officer so that proper authorities may be notified.

3.3 PROTECTION OF WATER RESOURCES

3.3 General

The Contractor shall not pollute any streams, rivers or waterways with fuels, oils, bitumens, calcium chloride, acids, insecticides, herbicides or other harmful materials. The Contractor shall investigate and comply with all applicable Federal, state, county, and municipal laws concerning pollution of rivers and streams.

3.4 Disposal

Disposal of any debris resulting from the contract work and any wastes, effluents, trash, garbage, oil, grease, chemicals, etc., in or adjacent to the work area will not be permitted. If any waste material is dumped in unauthorized areas, the Contractor shall remove the material and restore the area to its original condition. If necessary, contaminated ground shall be excavated, disposed of as directed by the Contracting Officer, replaced with suitable fill material, compacted and finished with topsoil, and planted as required to reestablish vegetation.

3.5 PROTECTION OF FISH AND WILDLIFE

The Contractor shall at all times perform all work and take such steps required to minimize interference with or disturbance to fish and wildlife. The Contractor will not be permitted to alter water flows or otherwise disturb native habitat adjacent to the work area which, in the opinion of

the Contracting Officer, are critical to fish and wildlife.

3.6 DISPOSAL OF DEBRIS

All debris resulting from construction operations on this contract shall be removed from the work site and disposed of at the Contractor's expense. Such disposal shall comply with all applicable Federal, state, and local laws. Such materials shall be removed from the site of the work before the date of completion of the work under these specifications.

3.7 MAINTENANCE OF POLLUTION, EROSION AND SEDIMENTATION CONTROL FACILITIES DURING CONSTRUCTION

During the life of this contract, the Contractor shall maintain all facilities constructed for pollution, erosion and sedimentation control under this contract as long as the operations creating the particular pollutant are being carried out or until the material concerned has become stabilized to the extent that pollution is no longer being created. During the construction period, the Contractor shall conduct frequent training sessions on environmental protection. The curricula should include methods of detecting and avoiding pollution; familiarity with pollution standards, both statutory and contractual; and installation and care of vegetative covers, plants and other facilities to prevent and correct environmental pollution.

3.7.1 MEASUREMENT AND PAYMENT

No separate measurement or payment will be made for the work specified in this section and all costs in connection therewith shall be included in the costs of all the bid items.

-- End of Section --

SECTION 01440

CONTRACTOR QUALITY CONTROL

PART 1 GENERAL

1.1 REFERENCES

The publications listed below form a part of this specification to the extent referenced. The publications are referred to in the text by basic designation only.

AMERICAN SOCIETY FOR TESTING AND MATERIALS (ASTM)

ASTM D 3740	(1996) Minimum Requirements for Agencies Engaged in the Testing and/or Inspection of Soil and Rock as Used in Engineering Design and Construction
ASTM E 329	(1995b) Agencies Engaged in the Testing and/or Inspection of Materials Used in Construction

PART 2 PRODUCTS (Not Applicable)

PART 3 EXECUTION

3.1 GENERAL REQUIREMENTS

The Contractor is responsible for quality control and shall establish and maintain an effective quality control system in compliance with the Contract Clause titled "Inspection of Construction." The quality control system shall consist of plans, procedures, and organization necessary to produce an end product which complies with the contract requirements. The system shall cover all construction operations, both onsite and offsite, and shall be keyed to the proposed construction sequence. The project 0superintendent will be held responsible for the quality of work on the job and is subject to removal by the Contracting Officer for non-compliance with quality requirements specified in the contract. The project superintendent in this context shall mean the individual with the responsibility for the overall management of the project including quality and production.

3.2 QUALITY CONTROL PLAN

The Contractor shall furnish for review by the Government, not later than 10 days after receipt of notice to proceed, the Contractor Quality Control (CQC) Plan proposed to implement the requirements of the Contract Clause titled "Inspection of Construction." The plan shall identify personnel, procedures, control, instructions, tests, records, and forms to be used. Construction will be permitted to begin only after acceptance of the CQC Plan.

3.2.1 Content of the CQC Plan

The CQC Plan shall include, as a minimum, the following to cover all

construction operations, both onsite and offsite, including work by subcontractors, fabricators, suppliers, and purchasing agents:

a. A description of the quality control organization, including a chart showing lines of authority and acknowledgment that the CQC staff shall implement the three phase control system for all aspects of the work specified. The staff shall include a CQC System Manager who shall report to the project superintendent.

b. The name, qualifications (in resume format), duties, responsibilities, and authorities of each person assigned a CQC function.

c. A copy of the letter to the CQC System Manager signed by an authorized official of the firm which describes the responsibilities and delegates sufficient authorities to adequately perform the functions of the CQC System Manager, including authority to stop work which is not in compliance with the contract. The CQC System Manager shall issue letters of direction to all other various quality control representatives outlining duties, authorities, and responsibilities. Copies of these letters shall also be furnished to the Government.

d. Procedures for scheduling, reviewing, certifying, and managing submittals, including those of subcontractors, offsite fabricators, suppliers, and purchasing agents. These procedures shall be in accordance with Section 01300 SUBMITTAL PROCEDURES.

e. Control, verification, and acceptance testing procedures for each specific test to include the test name, specification paragraph requiring test, feature of work to be tested, test frequency, and person responsible for each test. Testing laboratories shall be participants in the National Volunteer Laboratory Accreditation Program (NVLAP) (Laboratory facilities will be approved by the Contracting Officer.)

f. Procedures for tracking preparatory, initial, and follow-up control phases and control, verification, and acceptance tests including documentation.

g. Procedures for tracking construction deficiencies from identification through acceptable corrective action. These procedures shall establish verification that identified deficiencies have been corrected.

h. Reporting procedures, including proposed reporting formats.

i. A list of the definable features of work. A definable feature of work is a task which is separate and distinct from other tasks, has separate control requirements, and may be identified by different trades or disciplines, or it may be work by the same trade in a different environment. Although each section of the specifications may generally be considered as a definable feature of work, there are frequently more than one definable features under a particular section. This list will be agreed upon during the coordination meeting.

3.2.2 Acceptance of Plan

Acceptance of the Contractor's plan is required prior to the start of construction. Acceptance is conditional and will be predicated on satisfactory performance during the construction. The Government reserves the right to require the Contractor to make changes in his CQC Plan and operations including removal of personnel, as necessary, to obtain the quality specified.

3.2.3 Notification of Changes

After acceptance of the CQC Plan, the Contractor shall notify the Contracting Officer in writing of any proposed change. Proposed changes are subject to acceptance by the Contracting Officer.

3.3 COORDINATION MEETING

After the Preconstruction Conference, before start of construction, and prior to acceptance by the Government of the CQC Plan, the Contractor shall meet with the Contracting Officer or Authorized Representative and discuss the Contractor's quality control system. The CQC Plan shall be submitted for review a minimum of 10 calendar days prior to the Coordination Meeting. During the meeting, a mutual understanding of the system details shall be developed, including the forms for recording the CQC operations, control activities, testing, administration of the system for both onsite and offsite work, and the interrelationship of Contractor's Management and control with the Government's Quality Assurance. Minutes of the meeting shall be prepared by the Government and signed by both the Contractor and the Contracting Officer. The minutes shall become a part of the contract file. There may be occasions when subsequent conferences will be called by either party to reconfirm mutual understandings and/or address deficiencies in the CQC system or procedures which may require corrective action by the Contractor.

3.4 QUALITY CONTROL ORGANIZATION

3.4.1 Personnel Requirements

The requirements for the CQC organization are a CQC System Manager and sufficient number of additional qualified personnel to ensure contract compliance. The Contractor shall provide a CQC organization which shall be at the site at all times during progress of the work and with complete authority to take any action necessary to ensure compliance with the contract. All CQC staff members shall be subject to acceptance by the Contracting Officer.

3.4.2 CQC System Manager

The Contractor shall identify as CQC System Manager an individual within the onsite work organization who shall be responsible for overall management of CQC and have the authority to act in all CQC matters for the Contractor. The CQC System Manager shall be a construction person with a minimum of 10 years in related work. This CQC System Manager shall be on the site at all times during construction and shall be employed by the prime Contractor. The CQC System Manager shall be assigned no other duties. An alternate for the CQC System Manager shall be identified in the plan to serve in the event of the System Manager's absence. The requirements for the alternate shall be the same as for the designated CQC System Manager.

3.4.3 CQC Personnel

In addition to CQC personnel specified elsewhere in the contract, the Contractor shall provide as part of the CQC organization specialized personnel to assist the CQC System Manager for the following areas: structural, industrial hygiene, traffic control and safety. These individuals may be employees of the prime or subcontractor; be responsible to the CQC System Manager; be physically present at the construction site during work on their areas of responsibility; have the necessary education and/or experience in accordance with the experience matrix listed below or as specified in the associated specification section of this contract. These individuals shall have no other duties other than quality control.

Experience Matrix

	Area	Qualifications
a.	Industrial Hygienist	Certification that the Industrial Hygienist meets the Office of Personnel Management Standard for the Industrial Hygiene Series GS-690
b.	Structural	Graduate Structural Engineer with 2 yrs experience or person with 5 yrs related experience

3.4.4 Organizational Changes

The Contractor shall maintain the CQC staff at full strength at all times. When it is necessary to make changes to the CQC staff, the Contractor shall revise the CQC Plan to reflect the changes and submit the changes to the Contracting Officer for acceptance.

3.5 SUBMITTALS AND DELIVERABLES

Submittals, if needed, shall be made as specified in Section 01300 SUBMITTAL PROCEDURES. The CQC organization shall be responsible for certifying that all submittals and deliverables are in compliance with the contract requirements.

3.6 CONTROL

Contractor Quality Control is the means by which the Contractor ensures that the construction, to include that of subcontractors and suppliers, complies with the requirements of the contract. At least three phases of control shall be conducted by the CQC System Manager for each definable feature of work as follows:

3.6.1 Preparatory Phase

This phase shall be performed prior to beginning work on each definable feature of work, after all required plans/documents/materials are approved/accepted, and after copies are at the work site. This phase shall include:

a. A review of each paragraph of applicable specifications, reference codes, and standards. A copy of those sections of referenced

codes and standards applicable to that protion of the work to be accomplished in the field shall be made available by the Contractor at the preparatory inspection. These copies shall be maintained in the field and available for use by Government personnel until final acceptance of the work.

b. A review of the contract drawings.

c. A check to assure that all materials and/or equipment have been tested, submitted, and approved.

d. Review of provisions that have been made to provide required control inspection and testing.

e. Examination of the work area to assure that all required preliminary work has been completed and is in compliance with the contract.

f. A physical examination of required materials, equipment, and sample work to assure that they are on hand, conform to approved shop drawings or submitted data, and are properly stored.

g. A review of the appropriate activity hazard analysis to assure safety requirements are met.

h. Discussion of procedures for controlling quality of the work including repetitive deficiencies. Document construction tolerances and workmanship standards for that feature of work.

i. A check to ensure that the portion of the plan for the work to be performed has been accepted by the Contracting Officer.

j. Discussion of the initial control phase.

k. The Government shall be notified at least 24 hours in advance of beginning the preparatory control phase. This phase shall include a meeting conducted by the CQC System Manager and attended by the superintendent, other CQC personnel (as applicable), and the foreman responsible for the definable feature. The results of the preparatory phase actions shall be documented by separate minutes prepared by the CQC System Manager and attached to the daily CQC report. The Contractor shall instruct applicable workers as to the acceptable level of workmanship required in order to meet contract specifications.

3.6.2 Initial Phase

This phase shall be accomplished at the beginning of a definable feature of work. The following shall be accomplished:

a. A check of work to ensure that it is in full compliance with contract requirements. Review minutes of the preparatory meeting.

b. Verify adequacy of controls to ensure full contract compliance. Verify required control inspection and testing.

c. Establish level of workmanship and verify that it meets minimum acceptable workmanship standards. Compare with required sample panels as appropriate.

d. Resolve all differences.

e. Check safety to include compliance with and upgrading of the safety plan and activity hazard analysis. Review the activity analysis with each worker.

f. The Government shall be notified at least 24 hours in advance of beginning the initial phase. Separate minutes of this phase shall be prepared by the CQC System Manager and attached to the daily CQC report. Exact location of initial phase shall be indicated for future reference and comparison with follow-up phases.

g. The initial phase should be repeated for each new crew to work onsite, or any time acceptable specified quality standards are not being met.

3.6.3 Follow-up Phase

Daily checks shall be performed to assure control activities, including control testing, are providing continued compliance with contract requirements, until completion of the particular feature of work. The checks shall be made a matter of record in the CQC documentation. Final follow-up checks shall be conducted and all deficiencies corrected prior to the start of additional features of work which may be affected by the deficient work. The Contractor shall not build upon nor conceal non-conforming work.

3.6.4 Additional Preparatory and Initial Phases

Additional preparatory and initial phases shall be conducted on the same definable features of work if: the quality of on-going work is unacceptable; if there are changes in the applicable CQC staff, onsite production supervision or work crew; if work on a definable feature is resumed after a substantial period of inactivity; or if other problems develop.

3.7 TESTS

3.7.1 Testing Procedure

The Contractor shall perform specified or required tests to verify that control measures are adequate to provide a product which conforms to contract requirements. Upon request, the Contractor shall furnish to the Government duplicate samples of test specimens for possible testing by the Government. Testing includes operation and/or acceptance tests when specified. The Contractor shall procure the services of a Corps of Engineers approved testing laboratory or establish an approved testing laboratory at the project site. Testing laboratories shall be participants in the National Volunteer Laboratory Accreditation Program (NVLAP). The Contractor shall perform the following activities and record and provide the following data:

a. Verify that testing procedures comply with contract requirements.

b. Verify that facilities and testing equipment are available and comply with testing standards.

c. Check test instrument calibration data against certified standards.

d. Verify that recording forms and test identification control number system, including all of the test documentation requirements, have been prepared.

e. Results of all tests taken, both passing and failing tests, shall be recorded on the CQC report for the date taken. Specification paragraph reference, location where tests were taken, and the sequential control number identifying the test shall be given. If approved by the Contracting Officer, actual test reports may be submitted later with a reference to the test number and date taken. An information copy of tests performed by an offsite or commercial test facility shall be provided directly to the Contracting Officer. Failure to submit timely test reports as stated may result in nonpayment for related work performed and disapproval of the test facility for this contract.

3.7.2 Testing Laboratories

3.7.2.1 Capability Check

The Government reserves the right to check laboratory equipment in the proposed laboratory for compliance with the standards set forth in the contract specifications and to check the laboratory technician's testing procedures and techniques. Laboratories utilized for testing soils, concrete, asphalt, and steel shall meet criteria detailed in ASTM D 3740 and ASTM E 329.

3.7.2.2 Capability Recheck

If the selected laboratory fails the capability check, the Contractor will be assessed a charge of $1500 to reimburse the Government for each succeeding recheck of the laboratory or the checking of a subsequently selected laboratory. Such costs will be deducted from the contract amount due the Contractor.

3.7.3 Onsite Laboratory

The Government reserves the right to utilize the Contractor's control testing laboratory and equipment to make assurance tests, and to check the Contractor's testing procedures, techniques, and test results at no additional cost to the Government.

3.7.4 Furnishing or Transportation of Samples for Testing

Costs incidental to the transportation of samples or materials shall be borne by the Contractor.

3.8 COMPLETION INSPECTION

3.8.1 Punch-Out Inspection

Near the end of the work, or any increment of the work established by a time stated in the Special Clause, "Commencement, Prosecution, and Completion of Work", or by the specifications, the CQC Manager shall conduct an inspection of the work. A punch list of items which do not conform to the approved drawings and specifications shall be prepared and included in the CQC documentation, as required by paragraph DOCUMENTATION. The list of deficiencies shall include the estimated date by which the

deficiencies will be corrected. The CQC System Manager or staff shall make a second inspection to ascertain that all deficiencies have been corrected. Once this is accomplished, the Contractor shall notify the Government that the facility is ready for the Government Pre-Final inspection.

3.8.2 Pre-Final Inspection

The Government will perform the pre-final inspection to verify that the facility is complete and ready to be occupied. A Government Pre-Final Punch List may be developed as a result of this inspection. The Contractor's CQC System Manager shall ensure that all items on this list have been corrected before notifying the Government, so that a Final inspection with the customer can be scheduled. Any items noted on the Pre-Final inspection shall be corrected in a timely manner. These inspections and any deficiency corrections required by this paragraph shall be accomplished within the time slated for completion of the entire work or any particular increment of the work if the project is divided into increments by separate completion dates.

3.8.3 Final Acceptance Inspection

The Contractor's Quality Control Inspection personnel, plus the superintendent or other primary management person, and the Contracting Officer's Representative shall be in attendance at the final acceptance inspection. The final acceptance inspection will be formally scheduled by the Contracting Officer based upon results of the Pre-Final inspection. Notice shall be given to the Contracting Officer at least 14 days prior to the final acceptance inspection and shall include the Contractor's assurance that all specific items previously identified to the Contractor as being unacceptable, along with all remaining work performed under the contract, will be complete and acceptable by the date scheduled for the final acceptance inspection. Failure of the Contractor to have all contract work acceptably complete for this inspection will be cause for the Contracting Officer to bill the Contractor for the Government's additional inspection cost in accordance with the contract clause titled "Inspection of Construction".

3.9 DOCUMENTATION

The Contractor shall maintain current records providing factual evidence that required quality control activities and/or tests have been performed. These records shall include the work of subcontractors and suppliers and shall be on an acceptable form that includes, as a minimum, the following information:

a. Contractor/subcontractor and their area of responsibility.

b. Operating plant/equipment with hours worked, idle, or down for repair.

c. Work performed each day, giving location, description, and by whom.

d. Test and/or control activities performed with results and references to specifications/drawings requirements. The control phase shall be identified (Preparatory, Initial, Follow-up). List of deficiencies noted, along with corrective action.

e. Quantity of materials received at the site with statement as to acceptability, storage, and reference to specifications/drawings

requirements.

f. Submittals and deliverables reviewed, with contract reference, by whom, and action taken.

g. Offsite surveillance activities, including actions taken.

h. Job safety evaluations stating what was checked, results, and instructions or corrective actions.

i. Instructions given/received and conflicts in plans and/or specifications.

j. Contractor's verification statement.

These records shall indicate a description of trades working on the project; the number of personnel working; weather conditions encountered; and any delays encountered. These records shall cover both conforming and deficient features and shall include a statement that equipment and materials incorporated in the work and workmanship comply with the contract. The original and one copy of these records in report form shall be furnished to the Government daily within 24 hours after the date covered by the report, except that reports need not be submitted for days on which no work is performed. As a minimum, one report shall be prepared and submitted for every 7 days of no work and on the last day of a no work period. All calendar days shall be accounted for throughout the life of the contract. The first report following a day of no work shall be for that day only. Reports shall be signed and dated by the CQC System Manager. The report from the CQC System Manager shall include copies of test reports and copies of reports prepared by all subordinate quality control personnel.

3.10 SAMPLE FORMS

Sample forms enclosed at the end of this section.

3.11 NOTIFICATION OF NONCOMPLIANCE

The Contracting Officer will notify the Contractor of any detected noncompliance with the foregoing requirements. The Contractor shall take immediate corrective action after receipt of such notice. Such notice, when delivered to the Contractor at the work site, shall be deemed sufficient for the purpose of notification. If the Contractor fails or refuses to comply promptly, the Contracting Officer may issue an order stopping all or part of the work until satisfactory corrective action has been taken. No part of the time lost due to such stop orders shall be made the subject of claim for extension of time or for excess costs or damages by the Contractor.

3.12 MEASUREMENT AND PAYMENT

No separate measurement or payment will be made for the work specified in this section and all costs in connection therewith shall be included in the costs of all the bid items.

-- End of Section --

THIS PAGE HAS BEEN LEFT INTENTIONALLY BLANK

SECTION 01500

TEMPORARY CONSTRUCTION

PART 1 GENERAL

1.1 SUMMARY

The work covered by this section consists of furnishing all labor, materials, plant and equipment, and performing all operations required for the construction of storage areas, and service facilities needed for execution and completion of the work, including the provisions of a Contractor field office and a Government field office at the work site.

1.2 REFERENCES

The publications listed below form a part of this specification to the extent referenced. The publications are referred to in the text by basic designation only.

CORPS OF ENGINEERS (COE)

EM 385-1-1	(1996) Safety and Health Requirements Manual

CODE OF FEDERAL REGULATIONS (CFR)

CFR 29 Part 1926	Safety and Health Regulations for Construction

1.3 COORDINATION WITH COUNTY EMERGENCY COMMUNICATIONS OFFICE

The Contractor shall coordinate work activities requiring lane closures on the Delaware City and Reedy Point Bridges with the New Castle County Emergency Communications Office as required in Section 01570 TRAFFIC CONTROL.

1.4 SUBMITTALS

Government approval is required for submittals with a "GA" designation; submittals having an "FIO" designation are for information only. The following shall be submitted in accordance with Section 01300 SUBMITTAL PROCEDURES:

SD-08 Statements

Temporary Facilities Plan; GA CO

The Contractor shall submit to the Contracting Officer, for approval, its plans showing the layout and details of all temporary facilities to be used for this contract, including proposed alignment of all safety fencing.

Safety Plan; GA CO

The Contractor shall submit a plan showing the proposed arrangement of any safety nets or safety lines and belts, as well as all other safety considerations as specified herein, as part of the accident prevention plan required by the Contract Clause entitled: "Accident Prevention". The Contractor shall coordinate this plan with the U.S. Coast Guard to assure

that the nets or lines do not pose a hazard to navigation.

1.5 SITE CONDITIONS

The conditions at the work site require that a lifesaving skiff be manned and immediately available when work is being performed over water. Safety nets are required when working more than 25 feet above the water or ground surface. All safety equipment shall be in accordance with the requirements of EM 385-1-1 and CFR 29 Part 1926. All applicable provisions of EM 385-1-1, concerning work with electrical power, lockout/tagout requirements, confined space, and water safety procedures shall be followed by the Contractor.

1.6 UTILITIES

Electrical and utility lines exist in the vicinity of, and cross under the Reedy Point and Delaware City Bridges. The Contractor shall identify and tag these lines as necessary to caution his employees and shall not operate equipment or booms in their vicinity. See Section 01060 SAFETY for all safety requirements.

PART 2 PRODUCTS

2.1 GOVERNMENT FIELD OFFICE

The Government field office trailer to be provided by the Contractor shall be new or recently renovated to a like-new condition subject to the approval of the Contracting Officer. The Government field office shall have a minimum floor area of 440 square feet, two locking doors, and partitioned restroom facilities. The trailer shall have sufficient lighting to supply 150 foot-candles at the desk top level and shall be supplied with 110 volt and 220 volt electrical outlets as required for heating, air conditioning, lighting, water cooler, and other accessories. The exterior of the office shall be equipped with flood lights to provide security lighting during hours of darkness. Weekly janitorial services shall be supplied during normal working hours. The Contractor shall provide potable water (hot and cold), provide for treatment of sewage, and provide electric and telephone services, all in accordance with applicable local municipal, county and State codes.

2.1.1 Office Equipment

The following office equipment shall be provided by the Contractor for the Government field office trailer:

a. Two desks having 60-inch by 30-inch tops, with lockable drawers; two swivel chairs; and two tables with 60-inch by 30-inch laminated tops;

b. One 60-inch by 30-inch conference table with ten chairs.

c. Telephone, two sets, two numbers, unlimited calling area, and one telephone answering machine;

d. Fire resistant, four-drawer, lockable legal size filing cabinet, two sets;

e. Shelf set, two shelves high, each measuring 12-inch deep by 3-feet long, one per desk;

f. Three waste baskets;

g. Electric water cooler;

h. Vertical filing plan rack for two sets of 28-inch by 40-inch plans each rack; and

i. Copier, Konica Model 3290 desk top copier, or approved equal, including adequate supplies and service agreement.

j. Fax Machine, Xerox Model N58, or approved equal, including adequate supplies and service agreement.

2.2 WEATHER INSTRUMENTS

2.2.1 Rain and Snow Gage

National Weather Service standard gage with stand and wind screen. The gage shall be designed to measure both rain and snow, shall be manufactured of copper and brass, and shall contain a funnel, inner tube, outer cylinder and dipstick. The wind screen shall have four 2-foot high legs and consist of 32 free-swinging leaves evenly spaced around a 48-inch diameter ring.

2.2.2 Thermometer

Minimum/maximum outdoor type with instrument shelter. The thermometer shall be mercury filled and designed to indicate minimum, maximum, and current temperatures from -40 to 130 degrees F. The instrument shelter shall be constructed of wood with louvered front and sides, shall be painted white, and shall have a keyed lock.

PART 3 EXECUTION

3.1 TEMPORARY CONSTRUCTION

3.1.1 General

The Contractor may construct within the work area indicated on the contract drawings, subject to the approval of the Contracting Officer, stockpile areas and on-site plant and facilities as needed for the execution of the work.

3.1.2 Restoration of Work Site

Removal of all temporary construction and restoration of the work site upon completion of the contract shall be in accordance with the requirements of Section 01430 ENVIRONMENTAL PROTECTION.

3.2 CONTRACTOR'S PROJECT OFFICES

The Contractor shall establish at the Delaware City Bridge and Reedy Point Bridge work site a project office equipped and staffed to efficiently conduct the work under this contract and provide essential information to the Contracting Officer or authorized representative. The Contractor shall keep at all times in the office a copy of all drawings, specifications, and other pertinent information, and shall at all times give the Contracting Officer access thereto. The Contractor's office shall be equipped with telephone facilities which shall be available for use by the Contracting Officer.

3.2.1 Coordination with County Emergency Communications Office

The Contractor shall also establish a separate telephone line at the field office which shall be dedicated solely for notification of emergency vehicle crossings by County Emergency Communications Office, as required by Section 01570 TRAFFIC CONTROL.

3.3 GOVERNMENT FIELD OFFICE

The Contractor shall provide and maintain a field office at the project site for the sole use of the Contracting Officer's representatives. The office shall be complete and ready for occupancy not later than 30 days after receipt of Notice to Proceed.

a. The Contractor shall provide the trailer at the work site with adequate heat, light, electricity, air conditioning, water, toilet and lavatory facilities. The Contractor shall provide portable water, provide for treatment of sewage, and provide permanent electric and telephone services, all in accordance with applicable local municipal, county and State codes. All utility costs arising from the use of the office, including telephone cost, shall be borne by the Contractor.

b. The trailer shall be placed on concrete block supports, leveled and tied down to withstand wind loads. A corrugated metal curtain shall be installed around the perimeter of the trailer from floor level to the ground. The curtain shall be firmly attached to withstand appropriate wind loads. All water piping and all waste piping shall be adequately supported and insulated.

c. The Contractor shall provide all janitorial supplies and services for the trailer complex to include as a minimum, daily sweeping, dusting, emptying of waste baskets, trash collection, and servicing of toilets and weekly mopping of all floors, sterilization of toilet seats and monthly waxing of all tile floors and washing of windows. The Contractor shall also provide for major maintenance to the trailer and its utilities.

d. The office shall be enclosed by an 8-foot high chain-link security fence with three strands of barbed wire, and shall be lighted during hours of darkness. This fence shall enclose a Government parking area for approximately five cars and shall include appropriate gates with locks for both vehicles and employees.

e. The Contractor shall provide the above described facilities, equipment, and services for the life of the contract.

3.4 PROJECT AND SAFETY SIGNS

The Contractor shall provide and erect at locations designated by the Contracting Officer, the project and safety signs shown on the sketches attached as Section 00830 of this contract.

3.5 WEATHER INSTRUMENTS

The Contractor shall provide and maintain at the work site in locations determined by the Contracting Officer, weather instruments consisting of a rain and snow gage with stand and a thermometer with instrument shelter.

The Contractor shall take daily readings of precipitation and the minimum and maximum temperatures, and shall record such information on the Contractor Quality Control Reports as required under Section 01440 CONTRACTOR QUALITY CONTROL. This information will be used by the Contracting Officer as the basis for determining if the Contractor is entitled to a time extension for unusually severe weather in accordance with the Special Clause entitled: "Time Extensions for Unusually Severe Weather." The Contracting Officer will also consider other climatological factors such as abnormally high tides and excessive sustained wind velocities when evaluating possible time extensions. All weather instruments shall become the property of the Government and shall be furnished to the Contracting Officer upon completion of the contract work.

3.6 MEASUREMENT AND PAYMENT

No separate measurement or payment will be made for the work specified in this section and all costs in connection therewith shall be included in the costs of all the bid items.

-- End of Section --

THIS PAGE HAS BEEN LEFT INTENTIONALLY BLANK

SECTION 01570

TRAFFIC CONTROL

PART 1 GENERAL

1.1 SCOPE

The work covered by this section consists of furnishing all labor, materials, plant and equipment, and performing all operations required for long term lane closure and the maintenance and protection of vehicular traffic passing through the contract work areas.

1.2 REFERENCES

The publications listed below form a part of this specification to the extent referenced. The publications are referred to in the text by basic designation only.

DELAWARE DEPARTMENT OF TRANSPORTATION (DelDOT)

Standard Specifications	(July, 1985 Edition, including latest revisions) Specifications for Road and Bridge Construction
Traffic Control Manual	(1993) Traffic Controls for Street and Highway Construction, Maintenance, Utility and Emergency Operations

1.3 SUBMITTALS

Government approval is required for submittals with a "GA" designation; submittals having an "FIO" designation are for information only. The following shall be submitted in accordance with Section 01300 SUBMITTAL PROCEDURES:

SD-08 Statements

Traffic Control Plan; FIO CO

The Contractor shall develop and submit a Traffic Control Plan in accordance with the provisions of the Traffic Control Manual to the Delaware Department of Transportation for approval by the Chief Traffic Engineer. The plan shall include, but not be limited to: the lane closure schedule; proposed signage; alternate routes; sign placement locations; variable message signs' locations and wording at each location; cone placement and spacing; standards being used, POC's notified, including 911 centers; POC method of contacting Contractor; procedures for giving emergency vehicles the right-of way; device (dedicated telephone number or travel advisory radio) to provide continuous travel advisory information to the public; qualifications of traffic control manager; and flagger certifications. Two copies of the approved Traffic Control Plan shall be submitted to the Contracting Officer prior to the start of work.

SD-13 Certificates

Traffic Control Device Certification; GA CO

The Contractor shall submit written certification that all traffic control devices conform to the requirements of the Traffic Control Manual.

1.3.1 POINTS OF CONTACT

Delaware Department of Transportation:

Mr. Michael Hitchens
Northern Delaware Traffic Control
Phone: (302) 323-5325

Delaware Department of Transportation Hauling Permits:

Mr. Chuck Johnson
Phone: (302) 739-4374
Fax: (302) 739-6299

1.4 TRAFFIC CONTROL MANAGER

The Contractor shall employ a full-time traffic control manager. This traffic manager shall have no other duties. The traffic control manager shall have 5 years of current experience in traffic control management on projects similar is size and scope to this contract.

PART 2 PRODUCTS

2.1 EQUIPMENT

Traffic control devices (signs, lights, reflectors, barricades, etc.) shall conform to the requirements of the Standard Specifications, Traffic Control Manual, and as the DelDOT Chief Traffic Engineer may direct for the safety of the traveling public and protection of the work area. The Contractor shall be responsible for maintaining all traffic control devices in a first-class operating condition. Conditions of signs, warning lights, drums, barricades and other traffic control devices shall be recorded on the Quality Control Records in accordance with Section 01440 CONTRACTOR QUALITY CONTROL.

PART 3 EXECUTION

3.1 NOTIFICATIONS

The Contractor shall, in coordination with DelDOT Northern Area, provide a schedule of lane closures on a monthly basis to the following agencies:

a. New Castle County Emergency Communications Office
Mr. James Bell
Phone: (302) 571-7947

b. Delaware State Police

c. New Castle County School Board

3.1.1 Delaware Department of Transportation Hauling Permits

The Contractor shall notify this office a minimum of 2 weeks prior to implementing any traffic control to request the rerouting of any wide load permits and suspension of blanket permits for the duration of the contract work.

3.2 UTILITIES

Prior to erecting any devices in the ground, the Contractor shall contact MissUtility in order to locate utilities in the area.

3.3 TRAFFIC CONTROL DEVICES

The Contractor shall provide all necessary flagger services, variable message signs, ground-mounted signs, STOP/SLOW paddles, floodlights, flashing warning lights and arrow boards, barricades, cones, markers, two-way radios, and other protective devices necessary to warn and protect the traveling public, pedestrians and his own employees in accordance with the approved Traffic Control Plan. The Contractor shall provide Alpha 60 truck-mounted attenuators, or approved equal, for the protection of workers in the closed lane during all lane closure periods. The traffic will be traveling in alternating north and south directions as a result of a single lane traffic control procedures, requiring that **two** truck-mounted attenuators be in use by the Contractor. All devices shall be maintained by the Contractor in first-class operating condition throughout the contract period. Conditions of signs, warning lights, barricades, and other traffic control devices shall be recorded daily on the Quality Control Records required in Section 01440 CONTRACTOR QUALITY CONTROL.

3.4 LANE CLOSURES

All lane closures shall be subject to the final approval of DelDOT as part of the Traffic Control Plan. A minimum open lane width of ten(10) feet shall be maintained at all times. Lane closures shall be subject to the following restrictions: No single lane closures will be permitted from noon on the Friday before to noon on the day after all Monday holidays, unless otherwise specified or approved by the Contracting Officer. Holidays shall be as defined in Subsection 101.27 of the Standard Specifications. Single lane closures will be permitted between the hours of 7:00 a.m. and 7:00 p.m., Mondays thru Fridays, except during holiday periods.

3.4.1 Emergency Vehicles

During lane closure periods, the contract work shall be performed in such a manner to allow emergency vehicles to safely cross the bridge within 5 minutes of notification by the New Castle County Emergency Communications Office. This office will be responsible for notifying the Contractor of imminent emergency vehicle crossings of the Delaware City Bridge during bridge closure periods. The Contractor shall demonstrate his plan to the Contracting Officer for allowing emergency vehicles to safely cross the bridge prior to starting work on the bridge.

3.5 PEDESTRIAN TRAFFIC

The Contractor shall make available to pedestrian traffic one of the sidewalks on the Delaware City Bridge and the Reedy Point Bridge for the duration of the contract.

3.6 DEBRIS

The traffic lanes of the bridge and the approach roadways within the limits of work shall be kept clear of all debris.

3.7 SPEED LIMIT

The entire construction work zone, during lane closures, shall be posted for a 25 mph speed limit for the duration of the lane closure.

3.8 MEASUREMENT AND PAYMENT

The work specified in this section will not be measured for payment and all costs in connection therewith shall be included in the contract lump sum price for Bid Item Nos. D1 & R1, "Traffic Control". Payment for this bid item shall constitute full compensation to the Contractor for providing all traffic control, including developing and obtaining approval of a traffic control plan by DelDOT, and providing all traffic control devices, flagger and similar services, and any other items required to complete the work.

-- End of Section --

SECTION 01576

PROTECTION OF MARINE NAVIGATION

PART 1 GENERAL

1.1 SCOPE

The work covered by this section consists of furnishing all labor, materials, plant and equipment, and performing all operations required for protecting vessels navigating the waterways beneath the Reedy Point and Delaware City Bridges.

1.2 References (Not Applicable)

PART 2 PRODUCTS

2.1 WARNING SIGNS

Warning signs shall be fabricated from 5/8-inch thick exterior plywood and shall be a minimum 4-feet high by 8-feet wide. The face of each sign shall have a white painted background with the words: "WARNING - OVERHEAD BRIDGE CONSTRUCTION 1,000 FEET AHEAD" painted in minimum 12-inch high bright red letters.

PART 3 EXECUTION

3.1 REQUIREMENTS

The following requirements shall be observed by the Contractor for the protection of marine navigation.

3.1.1 Suspension of Work

All work over the navigation channel shall be suspended whenever a vessel is approaching within 1,000 feet of the bridge and shall remain suspended until the vessel has completely passed under the bridge.

3.1.2 Coordination

The Contractor shall coordinate with the U.S. Army Corps of Engineers Dispatchers Office at the C & D Canal Project Office, Chesapeake City, Maryland at (Area Code 410) 885-5622 for advanced notification of marine traffic passing through the waterway. The Contractor shall maintain constant radio contact with the Dispatcher's Office and shall monitor all radio traffic between ships and the Dispatcher.

3.1.3 Warning Signs

The Contractor shall securely erect four warning signs, on on each side of the bridge on both banks of the canal, located 1,000 feet from the centerline of the bridge. The Contractor shall maintain the signs to the satisfaction of the Contracting Officer throughout the contract period.

3.1.4 Channel Observers

Whenever construction is in progress over the navigation channel, one

observer shall be positioned on the bridge to watch for oncoming vessels from both directions. When a vessel is within 1,000 feet from the bridge, an audible signal shall be sounded for all work to cease. Work shall not resume until an all-clear signal is sounded after the vessel has completely passed under the bridge.

3.2 MEASUREMENT AND PAYMENT

No separate measurement or payment will be made for the work specified in this section and all costs in connection therewith shall be included in the costs of all the bid items.

-- End of Section --

SECTION 01700

AS-BUILT DRAWINGS

PART 1 GENERAL

1.1 GENERAL

This section covers the preparation of as-built drawings complete, as a requirement of this contract.

PART 2 PRODUCTS (Not Applicable)

PART 3 EXECUTION

3.1 PROGRESS MARKED-UP AS-BUILT PRINTS

The Contractor shall mark-up one set of paper prints to show the as-built conditions for the project. These as-built marked prints shall be kept current and available on the jobsite at all times. All changes from the contract plans which are made in the work or additional information which might be uncovered in the course of construction shall be accurately and neatly recorded as they occur by means of details and notes. The as-built marked prints will be jointly inspected for accuracy and completeness by the Contracting Officer's representative and a responsible representative of the Construction Contractor prior to submission of each monthly pay estimate. The drawings shall show the following information, but not be limited thereto:

a. The location and description of any utility lines or other installations of any kind or description known to exist within the construction area. The location shall include dimensions to permanent features.

b. The location and dimensions of any changes within the structure.

c. Correct grade or alignment of roads, structures, or utilities if any changes were made from the contract plans.

d. Correct elevation if changes were made in site grading.

e. Changes in details of design or additional information obtained from working drawings specified to be prepared and/or furnished by the Contractor including but not limited to fabrication, erection, installation plans and placing details.

f. The topography and grades of all drainage affected as part of the project construction.

g. All changes or modifications which result from the final inspection.

3.2 PRELIMINARY SUBMITTALS

The Contractor shall prepare two copies of the progress as-built prints and these shall be delivered to the Contracting Officer at the time of final inspection for his review and approval. These as-built marked prints shall be neat, legible and accurate. The review by Government personnel will be

expedited to the maximum extent possible. Upon approval, one copy of the as-built marked prints will be returned to the Contractor for use in preparation of final as-built drawings. If upon review, the drawings are found to contain errors and/or omissions, they will be returned to the Contractor for corrections. The Contractor shall complete the corrections and return the as-built marked prints to the Contracting Officer within ten (10) calendar days.

3.3 DRAWING PREPARATION

3.3.1 General Requirements

Upon approval of the as-built prints submitted, the Contractor will be furnished the contract drawings on 3-1/2 inch floppy disks in AutoCAD Release 14.0 format with all amendments incorporated. The drawing files shall be modified as necessary to correctly show all the features of the project as it has been constructed by bringing the contract set into agreement with the approved as-built prints, adding such additional drawings as may be necessary.

3.3.2 Modification of Contract Drawings

Only personnel proficient in the preparation of engineering drawings and the use of AutoCAD Release 14.0, to standards satisfactory and acceptable to the Contracting Officer, shall be employed to modify the contract drawings or prepare additional new drawings. All additions and corrections to the contract drawings shall be done using AutoCAD Release 14.0 in a professional manner, and shall match the existing linework and/or lettering used on the drawings in type, density, size and style. The title block to be used for any new as-built drawings shall be the same as that used on the original drawings.

3.3.3 Identification of Final As-Built Drawings

When final revisions have been completed, each drawing shall be identified with the words "RECORD DRAWING AS-BUILT" followed by the name of the General Contractor in letters at least 3/16-inch high. All contract drawings shall be annotated and dated in the revision block as either "AS-BUILT DRAWING" denoting no revision on the sheet or "REVISED AS-BUILT DRAWING" denoting one or more revisions. For drawings having as-built revisions, a revision number contained within a 3/16 inch high triangle shall be included in the revision block. All changes to drawings shall be encircled with a series of short arcs forming a "cloud", with the triangle revision number positioned immediately next to each cloud.

3.4 FINAL REQUIREMENTS

After receipt by the Contractor of the approved as-built prints and the original contract drawings, the Contractor shall within 30 days make the final as-built submittal. This submittal shall consist of the completed as-built drawings on a CD in AutoCAD Release 14.0 format, one full-size mylar copy of the drawings, and the return of the approved as-built prints. All drawings shall be complete in all details. All AutoCAD files and reproducible drawings will become the property of the Government upon final approval. Failure to submit the above as-built information as required shall be cause for withholding any payment due the Contractor under this contract. The Contracting Officer will review all as-built drawings for accuracy and conformance to the above requirements. The Contractor shall make all corrections, changes, additions, and deletions required to meet

these standards. Approval and acceptance of final as-built drawings will be required before final payment is made to the Contractor.

3.5 MEASUREMENT AND PAYMENT

No separate measurement or payment will be made for the work specified in this section and all costs in connection therewith shall be included in the cost of all bid items.

-- End of Section --

THIS PAGE HAS BEEN LEFT INTENTIONALLY BLANK

SECTION 02430

BRIDGE DRAINAGE REPAIRS

PART 1 GENERAL

1.1 SCOPE

The work covered by this section consists of furnishing all labor, materials, plant and equipment, and performing all operations required for replacing downspout extension pipes and repairing downspout pipe supports on Reedy Point Bridge, as specified herein, and as shown on the contract drawings.

1.2 APPLICABLE PUBLICATIONS

The following publications form a part of this specification to the extent referenced. The publications are referred to in the text by basic designation only.

AMERICAN SOCIETY FOR TESTING AND MATERIALS (ASTM)

ASTM A 36	(1996) Carbon Structural Steel
ASTM A 307	(1994) Carbon Steel Bolts and Studs, 60,000 psi Tensile Strength
ASTM D 1785	(1989) Poly (Vinyl Chloride) (PVC) Plastic Pipe, Schedules 40, 80, and 120
ASTM D 2697	(1991) Volume Nonvolatile Matter in Clear or Pigmented Coatings
ASTM D 3212	(1989) Joints for Drain and Sewer Plastic Pipe Using Flexible Elastomeric Seals

AMERICAN WELDING SOCIETY (AWS)

AWS D1.5	(1995) Bridge Welding Code

STEEL STRUCTURES PAINTING COUNCIL (SSPC)

SSPC SP 6	(1994) Commercial Blast Cleaning

1.3 SUBMITTALS

Government approval is required for all submittals with a "GA" designation; submittals having an "FIO" designation are for information only. The following shall be submitted in accordance with Section 01300 SUBMITTAL PROCEDURES.

SD-08 Statements

Welder Qualifications; GA CO

The Contractor shall furnish certified copies of welder qualifications test records showing qualifications in accordance with AWS D1.5.

SD-13 Certificates

Angles; GA CO Downspout and Drain Pipe; GA CO; U-Bolts; GA CO Flexible Coupling; GA CO; Paint; GA CO

Certificates of compliance shall be furnished prior to installation of each item.

PART 2 PRODUCTS

2.1 MATERIALS

2.1.1 Pipe Support Angles

Angles shall be steel in conformance with ASTM A 36.

2.1.2 Downspout Extension and Drain Pipes

Downspout extension pipe and fittings shall be PVC conforming to ASTM D 1785, Schedule 80, with ultraviolet inhibitors. PVC downspout extensions shall be of the diameter shown on the contract drawings and shall be grooved as required by coupling manufacturer.

2.1.3 U-Bolts and Bolts

U-bolts and bolts shall be ASTM A 307, galvanized, with galvanized steel nuts and washers.

2.1.4 Coupling

Coupling shall be Style 77 Coupling made by Victaulic, Inc. Coupling shall be designed to fit the outside diameters of the existing cast iron drain pipe and new PVC downspout extension pipe.

2.1.5 Paint

The paint shall be a two-component aluminum epoxy mastic one-coat system, designed for adhesion to rusty steel and deteriorated vinyl and oil-based paints. The paint shall have the following characteristics:

Color	Aluminum
Dry Thickness	Min. 5 mils (each coat)
Solids Content (ASTM D 2697 at 75 deg F, one day cure)	90% =/- 2% by volume
Weight per gallon	11.3 =/- 0.5 lbs. at 77 deg. F
Theoretical Coverage per Mixed Gallon	Min. 288 Sq. Ft. at 5 mils
Pot Life	Min. 2 hrs at 75 deg F
Drying Time to Touch	Max. 24 hrs at 75 deg F
Application Methods	Brush, roller or spray
Environmental Code	Conforms to all present codes

2.1.6 Thinner

Thinner shall be as recommended by the paint manufacturer.

PART 3 EXECUTION

3.1 INSTALLATION

3.1.1 Downspout Support Repairs

3.1.1.1 Spans N1-N3 & S1-S3

New pipe support angles shall be bolted to existing vertical truss members, 1-foot below existing support angles. New pipe support angles shall be approximately 4'-6" in length, as shown on the drawings. Existing pipe support angles shall be removed and remnant welds on existing truss members shall be ground smooth and painted as specified in paragraph PAINTING. New angles shall be welded to the top of new pipe supports. Downspout pipe with fittings shall be attached to new pipe support angles using new U-bolts, nuts, and washers as indicated on the drawings. All new steel angles shall be cleaned and painted as specified in Specification Section 09900 PAINTING.

3.1.1.2 PP0 East, PP0' East & PP0' West, Anchor Truss

New pipe support angles shall be bolted to existing vertical truss members, and shall be offset 1-foot below existing support angles. New pipe support angles at this location shall be approximately 5'-6" in length, to support existing dual downspout extensions, as shown on the drawings. Existing pipe support angles shall be removed and remnant welds on existing truss members shall be ground smooth and painted as specified in paragraph PAINTING. New angles shall be welded to the top of new pipe supports. Downspout pipe with fittings shall be attached to new pipe support angles using new U-bolts, nuts, and washers as indicated on the drawings. All new steel angles shall be cleaned and painted as specified in Specification Section 09900 PAINTING.

3.1.2 Downspout Extension and Support Repairs, PP0 West, Anchor Truss

New 6-inch diameter PVC downspout extension shall be attached to existing cast iron downspout with coupling and downspout support angles shall be replaced at PP0 West, as shown on the contract drawings. New pipe support angles shall be bolted to existing vertical truss members, and shall be offset 1-foot below existing support angles. Existing pipe support angles shall be removed and remnant welds on existing truss members shall be ground smooth and painted as specified in paragraph PAINTING. New angles shall be welded to the top of new pipe support angles. The new downspout extension shall be attached to the existing downspout using a new coupling, per the coupling manufacturer's recommendations. PVC downspout extension shall be grooved to accept coupling as per the coupling manufacturer's recommendations. Downspout extension with fittings shall be attached to new pipe support angles using new U-bolts, nuts, and washers as indicated on the drawings. Downspout extension joints shall be made in accordance with ASTM D 3212 using push-on type gaskets. All new steel angles shall be cleaned and painted as specified in Specification Section 09900 PAINTING.

3.1.3 Downspout Extension Replacement, Stringer & Girder Spans

3.1.3.1 Spans N3-N.A. & S3-S.A.

The Contractor shall remove all existing vertical and inclined cast iron downspout extensions and couplings in Spans N3-N.A. and S3-S.A. to the limits shown on the contract drawings, and replace them with new 6-inch diameter PVC downspout extensions and couplings. Length of downspout extensions shall be as shown on the contract drawings. PVC downspout extension shall be grooved to accept coupling as per the coupling

manufacturer's recommendations. The Contractor shall reuse existing pipe supports, U-bolts, nuts and washers. The existing pipe support coating shall be touched-up as specified in Specification Section 09900 PAINTING.

3.2 PAINTING

3.2.1 Cleaning

New steel angles for new downspout supports shall be shop cleaned in accordance with SSPC SP 6. Remnant weld areas that have been ground smooth shall be cleaned in accordance with SSPC SP 6.

3.2.2 Coverage and Film Thickness

All new angles and remnant weld areas shall be painted to produce a minimum dry thickness of 5 mils. A second coat shall be applied to produce an additional minimum dry thickness of 5 mils. The total minimum dry thickness shall be 10 mils.

3.2.3 Paint Damage To Vehicles

The Contractor shall be responsible for any paint damage to vehicles crossing the bridge, crossing under the bridge and property adjacent or below the bridge resulting from his operations, and all complaints shall be promptly resolved. Thus, the Contractor shall take care to adequately provide an adequate containment system or protection during painting operations.

3.3 MEASUREMENT AND PAYMENT

All costs in connection with bridge drainage repairs shall be included in the following lump sum or unit price items. These items include full compensation to the Contractor for access, removal and disposal of downspout support angles, fabrication and installation of new pipe support angles, downspout extensions, new couplings and associated hardware, reinstallation of pipe support hardware, and painting.

3.3.1 Downspout Support Repairs

The work specified in this section for downspout support repairs in Spans N1-N3 & S1-S3 and at PP0 East, PP0' East & PP0' West, Anchor Truss will not be measured for payment. All costs in connection therewith shall be included in the contract lump sum price for Bid Item No. R2a, "Downspout Support Repairs."

3.3.2 Downspout Extension and Support Repairs, PP0 West, Anchor Truss

The work specified in this section for downspout extensions and support repairs at PP0 West, Anchor Truss will not be measured for payment. All costs in connection therewith shall be included in the contract lump sum price for Bid Item No. R2b, "Downspout Extensions and Support Repairs, PP0 West, Anchor Truss".

3.1.3 Downspout Extension Replacement, Stringer & Girder Spans

The work specified in this section for replacing vertical and inclined downspout extensions in Spans N3-N.A. and S3-S.A. will not be measured for payment. All costs in connection therewith shall be included in the contract lump sum price for Bid Item No. R2c, "Downspout Extensions".

-- End of Section --

THIS PAGE HAS BEEN LEFT INTENTIONALLY BLANK

SECTION 02451

GUARDRAIL MODIFICATIONS

PART 1 GENERAL

1.1 SCOPE

The work covered by this section consists of furnishing all labor, materials, and equipment, and performing all operations required for removal of existing guardrails and installation of approach roadway guardrail terminations at Reedy Point Bridge, as specified herein and shown on the drawings.

1.2 REFERENCES

The publications listed below form a part of this specification to the extent referenced. The publications are referred to in the text by basic designation only.

AMERICAN NATIONAL STANDARDS INSTITUTE (ANSI)

ANSI B18.2.2	(1987, Rev. 1995) Square and Hex Nuts (Inch Series)
ANSI B18.22.1	(1965, Rev. 1990) Plain Washers

AMERICAN SOCIETY FOR TESTING AND MATERIALS (ASTM)

ASTM A 36	(1996) Carbon Structural Steel
ASTM A 123	(1989a) Zinc (Hot-Dip Galvanized) Coatings on Iron and Steel Products
ASTM A 153	(1995) Zinc Coating (Hot-Dip) on Iron and Steel Hardware
ASTM A 325	(1996) Structural Bolts, Steel, Heat Treated, 120/105 ksi Minimum Tensile Strength
ASTM A 563	(1994) Carbon and Alloy Steel Nuts

AMERICAN WELDING SOCIETY (AWS)

AWS A2.4	(1993) Symbols for Welding, Brazing and Nondestructive Examination
AWS D1.1	(1996) Structural Welding Code - Steel

DELAWARE DEPARTMENT OF TRANSPORTATION (DelDOT)

Standard Specifications	(July, 1985 Edition, including latest revisions) Specifications for Road and Bridge Construction
Standard Drawings	(1996) Standard Construction Details

1.3 SITE CONDITIONS

The Contractor shall field verify the locations of existing guide posts, utility poles, and traffic signs.

1.4 GENERAL REQUIREMENTS

Welding shall be in accordance with AWS D1.1.

1.5 SUBMITTALS

Government approval is required for submittals with a "GA" designation; submittals having an "FIO" designation are for information only. The following shall be submitted in accordance with Section 01300 SUBMITTAL PROCEDURES:

SD-04 Drawings

Shop Drawings; GA CO

Shop drawings shall be submitted for approval for the guardrails and shall show all connection details, material thicknesses, and dimensions. Welds shall be indicated by standard welding symbols in accordance with AWS A2.4.

SD-13 Certificates

Bridge Railing; Guardrail Materials; GA CO

Certificates of compliance shall be submitted for approval for all guardrail materials specified herein.

PART 2 PRODUCTS

2.1 MATERIALS

2.1.1 Steel Posts, Steel Offset Blocks and Steel Shapes

Subsection 720.03 of the Standard Specifications.

2.1.2 Guardrail

Subsection 720.04 of the Standard Specifications.

2.1.3 Fittings

Subsection 720.05 of the Standard Specifications.

2.1.4 Guardrail to Barrier Connection Approach Type 2

Subsection 725.02 of the Standard Specifications and as shown on the Guardrail to Barrier Connection Approach Type 2 drawings of the Standard Drawings.

2.1.4.1 Thru Bolts

ASTM A 325, complete with nut and washer, and shall be completely galvanized in accordance with ASTM A 153.

2.1.5 Bearing Plates

ASTM A 36, and shall be completely galvanized in accordance with ASTM A 123.

2.1.6 [Enter Appropriate Subpart Title Here]2.1.6.1 Nuts

Carbon steel conforming to ASTM A 563, Grade A and meeting the dimensional requirements of ANSI B18.2.2.

2.1.6.2 Washers

Carbon steel conforming to SAE 1005-1020 and meeting the dimensional requirements of ANSI B18.22.1.

2.1.7 Backfill

Backfill material shall be obtained from existing excavated material or from an approved off-site source and shall conform to Section 209.03C of the Standard Specifications.

PART 3 EXECUTION

3.1 TRAFFIC CONTROL

All traffic control shall be in accordance with Section 01570 TRAFFIC CONTROL.

3.2 REMOVALS

Existing guardrail, posts, and railing shall be removed to the limits and at the location shown on the drawings and disposed of off-site, at no additional cost to the Government. Post holes from existing guardrail shall be backfilled and compacted to provide a smooth surface. Existing sign at the location shown on the drawings shall be removed and set aside for reinstallation upon completion of the guardrail modifications.

3.3 GUARDRAIL INSTALLATION

3.3.1 General

Guardrails shall be installed at the locations indicated on the drawings, in accordance with Subsection 720.07 of the Standard Specifications, and as shown on the Standard Drawings. Guardrail posts shall be placed to avoid contact with existing concrete curbs. Guardrail shall be connected to the existing guardrail to remain at the location shown on the drawings.

3.3.2 Guardrail to Barrier Connection Approach Type 2

Guardrail to barrier connection shall be installed as shown on the Standard Drawings and in accordance with Subsection 725.03 of the Standard Specifications and with the additional requirements specified herein.

3.3.2.1 Attachment to Existing Bridge Parapet

New guardrail sections shall be thru-bolted to existing reinforced concrete bridge parapets using terminal connectors and bearing plates as shown on the Standard Drawings. Holes for thru-bolts shall be field drilled in existing reinforced concrete parapets at the locations shown on the Contract Drawings. Only rotary drills shall be used to drill bolt holes. Pneumatic or percussion type drills will not be permitted. Holes shall be

cleaned out using a jet of water or compressed air and a wire brush prior to installing bolts. Holes shall be drilled using the holes in the bearing plates as a template.

3.4 REINSTALLATION OF EXISTING SIGN

Existing sign shall be reinstalled no further than 6 inches away from its previous location or as directed by the Contracting Officer, with signposts being plumb and firm in the ground. Reinstallation of sign shall not interfere with or damage new guardrail modifications or terminal connector.

3.5 MEASUREMENT AND PAYMENT

The work specified in this section will not be measured for payment and all costs in connection therewith shall be included in the contract lump sum price for Bid Item No. R3, "Guardrail Modifications". This price includes all items incidental to furnishing, delivering and installing the guardrail modifications and associated hardware.

-- End of Section --

SECTION 02452

BRIDGE RAILING REPAIRS

PART 1 GENERAL

1.1 SCOPE

The work covered by this section consists of furnishing all labor, materials, and equipment, and performing all operations required for repairing the existing bridge railing at Reedy Point Bridge, as specified herein and shown on the drawings.

1.2 REFERENCES

The publications listed below form a part of this specification to the extent referenced. The publications are referred to in the text by basic designation only.

AMERICAN SOCIETY FOR TESTING AND MATERIALS (ASTM)

ASTM A 193	(1996) Alloy-Steel and Stainless Steel Bolting Materials for High-Temperature Service
ASTM F 594	(1991) Stainless Steel Nuts
ASTM B 221	(1996) Aluminum and Aluminum-Alloy Extruded Bars, Rods, Wire, Shapes, and Tubes

AMERICAN WELDING SOCIETY (AWS)

AWS A2.4	(1993) Symbols for Welding, Brazing and Nondestructive Examination
AWS D1.1	(1996) Structural Welding Code - Steel

1.3 SITE CONDITIONS

The Contractor shall field verify the locations of damaged bridge railing and posts to be replaced, noting locations of railing splices, spacing of posts, and placement of bolts..

1.4 GENERAL REQUIREMENTS

Welding shall be in accordance with AWS D1.1.

1.5 SUBMITTALS

Government approval is required for submittals with a "GA" designation; submittals having an "FIO" designation are for information only. The following shall be submitted in accordance with Section 01300 SUBMITTAL PROCEDURES:

SD-04 Drawings

Shop Drawings; GA CO

Shop drawings shall be submitted for approval for the bridge railing and shall show all connection details, material thicknesses, and dimensions. Welds shall be indicated by standard welding symbols in accordance with AWS A2.4.

SD-13 Certificates

Bridge Railing; Guardrail Materials; GA CO

Certificates of compliance shall be submitted for approval for all bridge railing materials specified herein.

PART 2 PRODUCTS

2.1 MATERIALS

2.1.1 [Enter Appropriate Subpart Title Here]2.1.1.1 Bridge Railing, Posts and Hardware

Bridge railing shall be of the dimensions and material shown on the reference drawings. Rails, shall be extruded aluminum conforming to B221-64, Alloy 6061-T6 or 6062-T6. Splice sleeves and nuts shall conform to ASTM B 221, Alloy 6061-T6 or 6062-T6. Posts shall be cast aluminum, Aluminum Association Alloy A344-T4, 20% minimum elongation. Aluminum washers shall conform to B209-64, and be alloy-clad CG42A or 2024-T3. Cap screws shall be stainless steel, conforming to ASTM A 193, Grade B8. Post connection nuts shall be stainless steel conforming to ASTM F 594. Post connection washers shall be series 316 stainless steel conforming to FS FF-W-84a. Isolation washers shall be EPDM(ethylene propylene diene monomer) meeting ASTM D 2000.

PART 3 EXECUTION

3.1 TRAFFIC CONTROL

All traffic control shall be in accordance with Section 01570 TRAFFIC CONTROL.

3.2 REMOVALS

Existing damaged railing shall be removed at the locations shown on the drawings and disposed of off-site, at no additional cost to the Government.

3.3 BRIDGE RAILING REPAIRS

3.3.1 Aluminum Rail

The aluminum bridge rail shall be replaced as shown on the reference drawings at the following locations:

a.)Span S27-S28: One span (approximately 24 linear feet), east side.
b.)Span N5-N6: One span (approximately 24 linear feet), east side.

3.3.2 Cast Aluminum Posts

The cast aluminum posts shall be replaced as shown on the reference drawings. The Contractor is to install new stainless steel nuts and stainless steel washers on the existing stainless steel post anchor bolts

instead of the aluminum nuts and washers shown on the reference drawings. Isolation washers are to be placed between the new stainless steel nuts and washers and the new aluminum posts. Posts are to be replaced at the following locations:

a.)Span S31-S32: 2 posts, east side.
b.)Span N5-N6: 1 post, east side.

3.4 RAILING HARDWARE REPLACEMENT

3.4.1 Washer Replacement

The Contractor shall replace broken, deteriorated, or missing washers at the railing posts. At the locations where broken or deteriorated washers are replaced, the Contractor shall remove the existing anchor bolt nut and install a new anchor bolt nut. Isolating washers shall be installed between the aluminum post and the new stainless steel nut and washer. The washers and anchor bolt nuts shall be replaced at the following locations:

1. Span N32-N.A., east, 14 deteriorated washers
2. Span N32-N.A., west, 10 deteriorated washers
3. Span N31-N32, east, 21 deteriorated washers
4. Span N31-N32, west, 21 deteriorated washers, 1 missing washer
5. Span N30-N31, east, 11 deteriorated washers
6. Span N30-N31, west, 10 deteriorated washers
7. Span N29-N30, east, 20 deteriorated washers
8. Span N29-N30, west, 17 deteriorated washers
9. Span N28-N29, east, 16 deteriorated washers
10. Span N28-N29, west, 23 deteriorated washers
11. Span N27-N28, east, 16 deteriorated washers
12. Span N27-N28, west, 27 deteriorated washers
13. Span N26-N27, east, 12 deteriorated washers
14. Span N26-N27, west, 17 deteriorated washers
15. Span N25-N26, east, 14 deteriorated washers
16. Span N25-N26, west, 11 deteriorated washers
17. Span N24-N25, east, 27 deteriorated washers
18. Span N24-N25, west, 24 deteriorated washers
19. Span N23-N24, east, 35 deteriorated washers
20. Span N23-N24, west, 23 deteriorated washers
21. Span N22-N23, east, 32 deteriorated washers
22. Span N22-N23, west, 32 deteriorated washers
23. Span N21-N22, east, 16 deteriorated washers
24. Span N21-N22, west, 24 deteriorated washers
25. Span N20-N21, east, 30 deteriorated washers
26. Span N20-N21, west, 24 deteriorated washers, 4 missing washers
27. Span N19-N20, east, 25 deteriorated washers
28. Span N19-N20, west, 26 deteriorated washers
29. Span N18-N19, east, 18 deteriorated washers
30. Span N18-N19, west, 21 deteriorated washers
31. Span N17-N18, east, 22 deteriorated washers
32. Span N17-N18, west, 36 deteriorated washers, 3 missing washers
33. Span N16-N17, east, 12 deteriorated washers
34. Span N16-N17, west, 3 deteriorated washers
35. Span N15-N16, east, 1 deteriorated washer
36. Span N12-N13, east, 1 deteriorated washer
37. Span N11-N12, east, 1 deteriorated washer
38. Span N10-N11, west, 2 deteriorated washers
39. Span N9-N10, east, 1 deteriorated washer

40. Span N9-N10, west, 2 deteriorated washers
40. Span N8-N9, east, 3 deteriorated washers
44. Span N7-N8, west, 1 deteriorated washer
43. Span N6-N7, west, 2 deteriorated washers
44. Span N5-N6, east, 2 missing washers
45. Span N4-N5, east, 1 deteriorated washer
46. Span N3-N4, east, 2 deteriorated washers
47. Span N3-N4, west, 1 deteriorated washer
48. Span N2-N3, east, 1 deteriorated washer
49. Span N2-N3, west, 27 deteriorated washers
50. Span N1-N2, east, 1 missing washer
51. Span N1-N2, west, 46 deteriorated washers, 1 missing washer
52. Main Span, west, 69 deteriorated washers
53. Span S1-S2, east, 1 broken washer
54. Span S1-S2, west, 17 deteriorated washers
55. Span S2-S3, east, 1 broken washer, 1 missing washer
56. Span S2-S3, west, 13 deteriorated washers
57. Span S3-S4, east, 1 deteriorated washer
58. Span S3-S4, west, 4 deteriorated washers
59. Span S4-S5, east, 19 deteriorated washers
60. Span S4-S5, west, 4 deteriorated washers
61. Span S5-S6, east, 11 deteriorated washers
62. Span S5-S6, west, 2 deteriorated washers
63. Span S6-S7, east, 7 deteriorated washers
64. Span S6-S7, west, 7 deteriorated washers
65. Span S7-S8, east, 5 deteriorated washers
66. Span S7-S8, west, 3 deteriorated washers
67. Span S8-S9, east, 5 deteriorated washers
68. Span S8-S9, west, 3 deteriorated washers
69. Span S9-S10, east, 8 deteriorated washers
70. Span S9-S10, west, 1 deteriorated washer
71. Span S10-S11, east, 2 deteriorated washers
72. Span S10-S11, west, 1 deteriorated washer
73. Span S11-S12, east, 6 deteriorated washers
74. Span S11-S12, west, 5 deteriorated washers
75. Span S12-S13, east, 4 deteriorated washers
76. Span S12-S13, west, 3 deteriorated washers
77. Span S13-S14, east, 1 deteriorated washer
78. Span S13-S14, west, 1 deteriorated washer
79. Span S14-S15, east, 2 deteriorated washers
80. Span S14-S15, west, 2 deteriorated washers
81. Span S15-S16, east, 2 deteriorated washers, 1 missing washer
82. Span S16-S17, east, 1 missing washer
83. Span S17-S18, east, 2 deteriorated washers
84. Span S18-S19, east, 1 missing washer
85. Span S19-S20, east, 1 deteriorated washer, 1 broken washer
86. Span S20-S21, east, 11 deteriorated washers
87. Span S21-S22, east, 11 deteriorated washers
88. Span S22-S23, east, 3 deteriorated washers
89. Span S25-S26, east, 1 deteriorated washer
90. Span S26-S27, east, 4 deteriorated washers
91. Span S27-S28, east, 1 deteriorated washer
92. Span S28-S29, east, 3 deteriorated washers
93. Span S30-S31, east, 5 deteriorated washers
94. Span S31-S32, east, 4 deteriorated washers
95. Span S32-S33, east, 2 deteriorated washers
96. Span S34-SA, east, 1 missing washer

3.4.2 Anchor Bolt Nuts Replacement

The Contractor shall replace missing anchor bolt nuts at the railing posts. When washer is missing, the Contractor shall supply new stainless steel and isolating washers in addition to the new anchor bolt nuts. Anchor bolt nuts shall be replaced at the following locations:

1. Span N3-N4, west, 1 untightened nut with no washer
2. Span N4-N5, west, 1 untightened nut with no washer
3. Span N7-N8, west, 2 untightened nut with no washer
4. Span N9-N10, west, 1 untightened nut with no washer
5. Span N10-N11, west, 1 untightened nut with no washer
6. Span N13-N14, west, 1 untightened nut with no washer
7. Span N15-N16, west, 1 untightened nut with no washer
8. Span N16-N17, west, 1 untightened nut with no washer

3.4.3 Cap Screw Replacement

The Contractor shall replace missing cap screws in the rails. Cap screws shall be replaced at the following locations:

1. Span N21-N22, east, 1 bolt
2. Span N20-N21, west, 1 bolt
3. Span N15-N16, west, 1 bolt
4. Span N1-N2, east, 1 bolt
5. Main Span, west, 1 bolt
6. Span S2-S3, west, 1 bolt
7. Span S5-S6, west, 2 bolts
8. Span S15-S16, east, 1 bolt
9. Span S19-S20, west, 1 bolt
10. Span S20-S21, east, 1 bolt
11. Span S25-S26, west, 1 bolt

3.5 MEASUREMENT AND PAYMENT

3.5.1 Bridge Railing Repairs

Bridge railing repairs on the Reedy Point Bridge will not be measured for payment and all costs in connection therewith shall be included in the contract lump sum price for Bid Item No. R4, "Bridge Railing Repairs". This price includes all items incidental to furnishing, delivering and installing the bridge rails and posts and associated hardware.

3.5.2 Railing Hardware Replacement

The replacement of missing, loose, or deteriorated railing hardware will not be measured for payment and all costs in connection therewith shall be included in the contract lump sum price for Bid Item No. R5, "Bridge Railing Hardware Replacement". This price includes all items incidental to replacing the missing, loose or deteriorated bridge railing hardware.

-- End of Section --

THIS PAGE HAS BEEN LEFT INTENTIONALLY BLANK

SECTION 02577

PAVEMENT AND SIDEWALK MARKINGS

PART 1 GENERAL

1.1 SCOPE

The work covered by this section consists of furnishing all labor, materials, plant and equipment, and performing all operations required for providing new permanent pavement markings on curb at Delaware City Bridge and sidewalk on Reedy Point Bridge and to replace existing markings which have been removed due to approach slab and roadway repairs at both bridges, as specified herein.

1.2 REFERENCES

The publications listed below form a part of this specification to the extent referenced. The publications are referred to in the text by basic designation only.

DELAWARE DEPARTMENT OF TRANSPORTATION (DelDOT)

Standard Specifications	(July, 1985 Edition, including latest revisions) Specifications for Road and Bridge Construction
Traffic Control Manual	(January, 1990 Edition, including latest revisions) Traffic Controls Manual for Street and Highway Construction, Maintenance, Utility and Emergency Operations

1.3 SUBMITTALS

Government approval is required for submittals with a "GA" designation; submittals having an "FIO" designation are for information only. The following shall be submitted in accordance with Section 01300 SUBMITTAL PROCEDURES:

SD-13 Certificates

Pavement Marking Material; GA CO

Certificates of compliance shall be submitted for approval for all pavement marking materials specified herein.

1.4 DELIVERY AND STORAGE

Paint shall be delivered to the site in original unopened containers and shall plainly show the designated name, formula or specification number, batch number, color, date of manufacture, manufacturer's name, formulation number, and directions, all of which shall be plainly legible at the time of use. The paint shall be homogeneous, easily stirred to smooth consistency, and shall show no hard settlement or other objectionable characteristics during a storage period of six months.

1.5 TRAFFIC CONTROLS

Suitable warning signs shall be placed near the beginning of the work and well ahead of the work site for alerting approaching traffic from both directions. Small markers shall be placed along newly painted lines to control traffic and prevent damage to newly painted surfaces. Painting equipment shall be marked with large warning signs indicating slow-moving painting equipment in operation. Single-lane traffic control operations shall conform to the requirements found in Section 01570 TRAFFIC CONTROL.

PART 2 PRODUCTS

2.1 PAVEMENT MARKING MATERIALS

Permanent pavement markings shall be oil-based, heated pigment binder (white and yellow paint) and optical glass spheres system conforming to Subsection 748.05 and Subsection 748.06, paragraph: "Paint", of the Standard Specifications, except that white pavement marking material applied to the vertical face of the sidewalk at Reedy Point Bridge may be applied with a unheated pigment binder.

2.2 EQUIPMENT

All equipment used to apply pavement markings shall conform to Subsection 748.04 of the Standard Specifications. All equipment will require approval by the Contracting Officer and shall be maintained in satisfactory operating condition. The dispenser for applying the optical glass spheres shall be attached to the paint dispenser and operate automatically and simultaneously with the paint applicator through the same control mechanism. The dispenser shall be capable of adjustment and be designed to provide uniform flow of optical glass spheres over the full-width of the stripe at the rate of application specified in the Standard Specifications Subsection 748.06, Paragraph: "Paint", at all operating speeds of the paint applicator to which it is attached.

PART 3 EXECUTION

3.1 SURFACE PREPARATION

New concrete surfaces shall be allowed to cure for a period not less than 5 days before application of pavement marking materials. All surfaces to be marked shall be thoroughly cleaned in accordance with the paint manufacturer's recommendations prior to application of the paint. Dust, dirt, and other granular surface deposits shall be removed by sweeping, blowing with compressed air, rinsing with water or a combination of these methods as required. Rubber deposits, surface laitance, rust, and other coating adhering to the surfaces to be marked shall be completely removed with scrapers, wire brushes, sandblasting, approved chemicals, or mechanical abrasion as directed by the Contracting Officer. Where oil or grease are present on existing surfaces to be marked, affected areas shall be scrubbed with several applications of trisodium phosphate solution or other approved detergent or degreaser, and rinsed thoroughly after each application. After cleaning, oil-soaked areas shall be sealed with cut shellac to prevent bleeding through the new paint.

3.2 APPLICATION

Application of pavement marking materials shall conform to the Standard Specifications Subsection 748.06, Paragraph: "Paint". Permanent pavement markings shall duplicate existing markings which were removed due to

concrete repairs and shall be in accordance with Traffic Control Manual. White pavement marking materials shall be applied to the face of the sidewalk curb along both sides of the Reedy Point Bridge for the entire length of the bridge. Yellow pavement marking materials shall be applied to the face of the curbs at the Delaware City Bridge for the entire length of the bridge.

3.3 MEASUREMENT AND PAYMENT

No separate measurement or payment will be made for the work specified in this section and all costs in connection therewith shall be included in the costs of incidental bid items.

-- End of Section --

THIS PAGE HAS BEEN LEFT INTENTIONALLY BLANK

SECTION 02935

SEEDING AND MULCHING

PART 1 GENERAL

1.1 SCOPE

The work covered by this section consists of furnishing all labor, materials, plant and equipment, and performing all operations required for the fertilizing, seeding and mulching all areas where the natural vegetation has been disturbed and or damaged by construction operations for the guardrail modifications and all other construction activities at the Delaware City and Reedy Point Bridges, as specified herein and shown on the drawings.

1.2 REFERENCES

The publications listed below form a part of this specification to the extent referenced. The publications are referred to in the text by basic designation only.

DELAWARE DEPARTMENT OF TRANSPORTATION (DelDOT)

Standard Specifications	(July, 1985 Edition, including latest revisions) Specifications for Road and Bridge Construction

1.3 SUBMITTALS

Government approval is required for submittals with a "GA" designation; submittals having an "FIO" designation are for information only. The following shall be submitted in accordance with Section 01300 SUBMITTAL PROCEDURES:

SD-13 Certificates

Fertilizer, Seeding and Mulching Materials; GA CO

Certificates of compliance shall be furnished for the fertilizer, seed, and mulch, prior to application of materials.

PART 2 PRODUCTS

2.1 SOIL SUPPLEMENTS

2.1.1 Limestone

Limestone shall conform to Subsection 734.02(a) of the Standard Specifications.

2.1.2 Fertilizer

Fertilizer shall conform to Subsections 734.02(b), (c), and (d) of the Standard Specifications as required for permanent roadside seeding.

2.1.3 Seed

Seed shall be permanent roadside seed conforming to Subsections 734.03(a) and 734.03(c) of the Standard Specifications.

2.1.4 Mulch

Mulch shall be wood cellulose fiber conforming to Subsection 735.02(b) of the Standard Specifications.

PART 3 EXECUTION

3.1 SURFACE PREPARATION AND APPLICATION

Surface preparation and wet application of soil supplements, seed, and mulch shall be in accordance with Subsection 734.06 of the Standard Specifications for slopes of 4:1 or flatter, or Subsection 734.07 for slopes of 3:1 or steeper, as applicable for conditions at the site. Limestone, fertilizer, seed and mulch shall be mixed and applied hydraulically with hydroseeding equipment to all areas where the natural vegetation has been disturbed or damaged by construction operations.

3.2 PLANTING SEASON

Planting season shall conform to the seeding periods specified in Subsection 734.03(c) of the Standard Specifications.

3.3 CARE AND PROTECTION

The Contractor shall be responsible for proper care and protection of the seeded areas during the contract period. Watering shall be required if the ground becomes excessively dry. Washouts and eroded areas shall be immediately restored and reseeded and mulched after such occurrences.

3.4 MEASUREMENT AND PAYMENT

No separate measurement or payment will be made for the work specified in this section and all costs in connection therewith shall be included in the costs of all the bid items.

-- End of Section --

SECTION 03360

CONCRETE REPAIRS

PART 1 GENERAL

1.1 SCOPE

The work covered by this section consists of furnishing all labor, materials, plant and equipment, and performing all operations required for construction of a new sidewalk, curb and pedestrian ramp at the Delaware City Bridge, concrete spall repairs in the substructure and sidewalks at the Delaware City Bridge, and removal and repair of deteriorated substructure, sidewalk, parapets and deck overhangs on the Reedy Point Bridge, as specified herein and shown on the contract drawings.

1.2 REFERENCES

The publications listed below form a part of this specification to the extent referenced. The publications are referred to in the text by basic designation only.

AMERICAN ASSOCIATION OF STATE HIGHWAY AND TRANSPORTATION OFFICIALS (AASHTO)

AASHTO M 284	(1991) Epoxy Coated Reinforcing Bars

AMERICAN SOCIETY FOR TESTING AND MATERIALS (ASTM)

ASTM A 153	(1995) Zinc Coating (Hot-Dip) on Iron and Steel Hardware
ASTM A 325	(1996) Structural Bolts, Steel, Heat Treated, 120/105 ksi, Minimum Tensile Strength
ASTM C 109	(1995) Compressive Strength of Hydraulic Cement Mortars (Using 2-in or 50-mm Cube Specimens)
ASTM C 171	(1995) Sheet Materials for Curing Concrete
ASTM C 293	(1994) Flexural Strength of Concrete (Using Simple Beam with Center-Point Loading)
ASTM C 496	(1996) Splitting Tensile Strength of Cylindrical Concrete Specimens
ASTM C 884	(1992) Thermal Compatibility Between Concrete and an Epoxy-Resin Overlay

DELAWARE DEPARTMENT OF TRANSPORTATION (DelDOT)

Standard Specifications	(July, 1985 Edition, including latest revisions) Specifications for Road and

1.3 SUBMITTALS

Government approval is required for submittals with a "GA" designation; submittals having an "FIO" designation are for information only. The following shall be submitted in accordance with Section 01300 SUBMITTAL PROCEDURES:

SD-01 Data

Concrete Repair Material; GA CO; Epoxy Patching Material; GA CO; Joint Sealant; GA CO; Curing Material; GA CO

Manufacturer's current printed product description, material safety data sheets (MSDS), and technical data sheets for all concrete repair material, epoxy patching material, and joint sealant shall be submitted prior to performing any concrete work. Data shall include complete instructions for surface preparation, mixing, application, curing, and cleanup of all concrete repair material.

SD-04 Drawings

Concrete Sidewalk and Curb; GA CO

Drawings for the concrete sidewalk and curb shall be submitted for approval. Drawings shall show all dimensions and locations of the pedestrian ramp and the expansion and contraction joints.

SD-08 Statements

Delivery Tickets; GA CO

Copies of certified delivery tickets for all concrete used in the repairs and in the curb and sidewalk, shall be submitted to the Contracting Officer at the time of delivery to the work site.

SD-9 Reports

Concrete Tests; GA CO

The Contractor shall submit for approval certified copies of all test data and test reports for air content, slump, and strength of the concrete. The compressive strength tests shall be performed at 4 hours, 24 hours, and 28 days

SD-13 Certificates

Concrete Repair Material; GA CO; Joint Sealant; GA CO

Concrete repair material and joint sealant will be accepted on the basis of a manufacturer's certification of compliance. No concrete repair material or joint sealant shall be used until notice of acceptance has been given by the Contracting Officer. Concrete repair material and joint sealant may be subjected to check testing by the Government from samples obtained at the project site.

Welded Wire Fabric; GA CO; Epoxy Patching Material; GA CO

Certificates of compliance attesting conformance with the specifications shall be submitted.

Expansion Hook Bolts; GA CO

Certificates of compliance attesting conformance with the specifications shall be submitted.

PART 2 PRODUCTS

2.1 SIDEWALK AND CURB REPLACEMENT, DELAWARE CITY BRIDGE

2.1.1 Concrete Materials

Class B, ready-mixed, conforming to the requirements of Section 812 of the Standard Specifications.

2.1.2 Subbase Material

Coarse aggregate shall conform to the requirements of Section 805 of the Standard Specifications.

2.1.3 Welded Wire Fabric

Welded wire fabric shall conform to Standard Specifications, Section 819 "Wire Mesh Reinforcement", with galvanized finish. Dimensions and gauge shall be as shown on the contract drawings.

2.1.4 Premolded Joint Filler Material

Cork or rubber filler material conforming to Section 503.09 of the Standard Specifications. Thickness of material shall be as shown on the drawings.

2.2 ALL NON-ROADWAY SURFACES

2.2.1 Vertical/Overhead Concrete Spall Repairs

Concrete repair material for vertical/overhead repairs shall be SikaTop 123 or approved equal two-component, polymer-modified, portland cement, fast-setting, non-sag mortar that is formulated for vertical and overhead surfaces. The material shall be compatible with the thermal coefficient of expansion of concrete, meeting the requirements of ASTM C 884, and shall be non-combustible, either before or after cure. Concrete repair material shall have the following properties:

Color		Concrete gray
Application Time		Approx. 15 minutes after mixing (temperature and humidity dependent)
Finishing Time		20- 60 minutes after mixing (temperature and humidity dependent)
Flexural Strength (ASTM C 293)		2,000 psi at 28 days
Splitting Tensile Strength (ASTM C 496)		900 psi at 28 days
Compressive Strength (ASTM C 109)		
	1 day	3,500 psi
	7 days	6,500 psi
	28 days	8,000 psi

2.2.2 Horizontal Concrete Spall Repairs

Concrete repair material for horizontal repairs shall be SikaTop 122 or approved equal two-component, polymer-modified, portland cement, fast-setting, trowel-grade mortar that is formulated for horizontal and vertical surfaces. The material shall be compatible with the thermal coefficient of expansion of concrete, meeting the requirements of ASTM C 884, and shall be non-combustible, either before or after cure. Concrete repair material shall have the following properties:

Color	Concrete gray
Application Time	Approx. 15 minutes after mixing (temperature and humidity dependent)
Finishing Time	20- 60 minutes after mixing (temperature and humidity dependent)
Flexural Strength (ASTM C 293)	2,000 psi at 28 days
Splitting Tensile Strength (ASTM C 496)	750 psi at 28 days
Compressive Strength (ASTM C 109)	
1 day	3,000 psi
7 days	5,500 psi
28 days	7,000 psi

2.2.3 Curing Materials

Impervious sheet materials conforming to ASTM C 171 shall be used. The specific type to be used is optional except that polyethylene sheeting, if used, shall be white-opaque and be in accordance with Subsection 501.25 of the Standard Specifications. Membrane-forming compounds shall not be used.

2.2.4 Expansion Hook Bolts

Expansion hook bolts for wire support shall be fabricated from ASTM A 325 steel with hot-dipped galvanized finish in accordance with ASTM A 153.

2.2.5 Welded Wire Fabric

Welded wire fabric shall conform to Standard Specifications, Section 819 "Wire Mesh Reinforcement", with galvanized finish. Dimensions and gauge shall be as shown on the contract drawings.

2.3 PREMOLDED JOINT FILLER MATERIAL

Cork or rubber filler material conforming to Section 503.09 of Standard Specifications. Thickness of material shall be as shown on the drawings.

2.4 HOT-POURED JOINT SEALER

Joint sealer shall conform to Section 808 of the Standard Specifications.

2.5 EPOXY COATING MATERIAL

Epoxy protective coating for existing epoxy-coated reinforcing steel shall be a patching or repair material meeting the requirements of AASHTO M 284, and shall be appropriate for repairs in the field.

2.6 CURING MATERIALS

Curing materials shall conform to the requirements of Subsections 501.24, 501.25, and 501.26 of the Standard Specifications.

PART 3 EXECUTION

3.1 LOCATION OF WORK

Concrete repairs shall be performed at the locations shown on the Contract Drawings.

3.2 REPAIR DIMENSIONS

3.2.1 General

Locations and approximate dimensions of repair areas are shown on the Contract Drawings. The approximate dimensions of repair are as shown on the contract drawings as determined during the 1998 Bridge Inspection and shall be used for bid purposes. The Contractor shall sound all concrete areas indicated for repair to determine the limits of the unsound and hollow concrete and mark the area to be repaired. The limits of spalled areas shall be a minimum of 3 inches into sound concrete surrounding the spalled area. Upon approval of the repair area by the Contracting Officer, the Contractor may proceed with repairs.

3.3 SURFACE PREPARATION

3.3.1 General

Spalled areas shall be prepared in accordance with the Contract Drawings. All unsound concrete, dirt, oil, grease, and all bond-inhibiting materials shall be sand blasted from the surface to receive the concrete repair material. Concrete shall be removed to 1 inch beyond existing reinforcing steel or to sound concrete, whichever is greater. Pneumatic hammers heavier than 30 pound class shall not be used. Pneumatic hammers and mechanical chipping tools shall not be operated at an angle in excess of 45 degrees relative to a plane perpendicular to the surface of the repair surface. After removal of unsound concrete, exposed surfaces of sound concrete shall be sandblasted and all dirt, oil, grease, dust, loose particles of aggregate, and other substances, which may inhibit bonding of the repair material to existing concrete, shall be removed. If in the opinion of the Contracting Officer excessive concrete has been removed, no payment will be made for that amount in excess of what is deemed necessary for the repair. All surfaces to receive the concrete repair materials shall be rough in profile to ensure a good bonding surface. Offsets which would cause an abrupt change in thickness without suitable reinforcement shall be chipped off or scarified. All debris resulting from the removal operations shall be disposed of off-site at the Contractor's expense. The Contractor shall provide safe, appropriate means for the Contracting Officer to inspect all concrete repair work.

3.3.2 Sidewalk, Curb and Pedestrian Ramp, Delaware City Bridge

The existing concrete sidewalk and curb shall be removed to the limits shown on the Contract Drawings. All debris resulting from removal shall be disposed of, off-site, at the Contractor's expense.

3.3.3 Reinforcement

3.3.3.1 Cleaning

Care shall be used when working around existing reinforcing bars or bearing assembly anchor bolts to prevent damage to, or the loosening of, the steel. Any damage resulting from the Contractor's operations shall be repaired as directed by the Contracting Officer, at no additional cost to the Government. All exposed reinforcement except epoxy-coated steel reinforcement shall be blast cleaned immediately prior to placement of concrete patch material. Reinforcement shall be free of rust, grease, oil, and other bond inhibiting matter.

3.3.3.2 Epoxy Coated Reinforcement

Any epoxy-coated steel reinforcement surfaces which have lost their epoxy coating during demolition shall be touched up with epoxy patching material according to the manufacturer's instructions. The coating shall be free from holiday, pin-holes, bubbles, runs, ridges, drops, waves, laps, and variations in texture. The coating shall be applied in such a manner as to produce an even continuous film of uniform thickness. Concrete surfaces shall be protected from the effects of coating operations. Epoxy coating operations shall only be performed when the prepared steel surfaces are dry and conditions are within the coating manufacturer's temperature and humidity ranges. All surfaces to be repaired shall be coated as soon as practicable after cleaning and approval by the Contracting Officer before visible oxidation appears. The application of the coating shall not be delayed more than 8 hours after cleaning. Film thickness of coating after curing shall be not less than 5 mils. Epoxy protective coating shall be allowed to cure as recommended by the coating manufacturer's printed instructions before placing concrete.

3.3.3.3 Installation of Wire Mesh

Expansion hook bolts shall be installed to the minimum embedment depth and at the spacing shown on the drawings. Welded wire mesh reinforcement shall be provided over the face of the repair area as shown on the contract drawings and attached to ends of hook bolts with wire ties. All prepared areas will require inspection and approval by the Contracting Officer prior to the application of polymer-modified concrete.

3.4 CONCRETE REPAIRS

3.4.1 Sidewalk, Curb and Pedestrian Ramp, Delaware City Bridge

A new concrete sidewalk and curb shall be installed in accordance with Sections 702 and 705 of the Standard Specifications. The pedestrian ramp shall be constructed to the grades and slopes shown on the contract drawings. Surface of pedestrian ramps shall receive a coarse-broomed or non-skid type finish. The joint between the curb and the existing asphalt pavement shall be sealed with hot-poured joint sealant as shown on the contract drawings.

3.4.2 Vertical/Overhead Concrete Spall Repairs

Vertical/overhead repairs include repair of the substructure at Delaware City Bridge and the substructure, parapets and deck overhangs at Reedy Point Bridge. Polymer-modified concrete shall be mixed, placed, finished, and cured in accordance with the manufacturer's recommendations. Polymer-modified concrete shall be scrubbed into the substrate filling all pours and voids, and shall be forced against the edges of repair and working toward center. The repairs shall be made in lifts of 1-1/2 inch

maximum thickness. The top surface of each lift shall be scored to roughen the surface. Each lift shall be allowed to reach final set, 30 minutes minimum, before applying fresh material. Saturate surface of the lift with clean water and scrub fresh mortar into preceding lift. After the final lift has set to the recommended stiffness, the surface shall be finished and cured with a wood or sponge float for a smooth surface.

3.4.3 Horizontal Concrete Spall Repairs

Horizontal repairs include repair of the sidewalk at Delaware City Bridge and the sidewalks and parapets at Reedy Point Bridge. Polymer-modified concrete shall be mixed, placed, finished and cured in accordance with the manufacturer's recommendations. Polymer-modified concrete shall be scrubbed into substrate, filling all pores and voids and shall be forced against edge of repair, working toward the center. Contractor shall fill repair with concrete repair material, and then consolidate and screed. Allow mortar or concrete to set to desired stiffness and then finish with wood or sponge float for a smooth surface.

3.5 CONCRETE TESTING

The Contractor shall perform tests for air content, slump, and strength of all concrete repair materials. Tests shall be performed as recommended by the manufacturer of the material. The compressive strength tests shall be performed at 4 hours, 24 hours, and 28 days.

3.6 MEASUREMENT AND PAYMENT

3.6.1 Replace Sidewalk and Curb, Delaware City Bridge

Replacing the sidewalk and curb at the Delaware City Bridge will not be measured for payment and all costs in connection therewith shall be included in the contract lump sum price for Bid Item No. D2, "Replace Sidewalk and Curb".

3.6.2 Horizontal Concrete Spall Repairs, Delaware City Bridge

Horizontal concrete spall repairs, to include repair of spalls and delaminated areas in the sidewalks at the Delaware City Bridge will be measured for payment by the square foot of horizontal concrete repaired. Payment will be made at the contract price per unit for Bid Item No. D3, "Horizontal Concrete Spall Repairs".

3.6.3 Vertical Concrete Spall Repair, Delaware City Bridge

Vertical concrete spall repairs, to include repair of spalls and delaminated areas on the substructure at the Delaware City Bridge will be measured for payment by the square foot of vertical concrete repaired. Payment will be made at the contract price per unit for Bid Item No. D4, "Vertical Concrete Spall Repair".

3.6.4 Horizontal Concrete Spall Repairs, Reedy Point Bridge

Horizontal concrete spall repairs, to include repair of spalls and delaminated areas in the sidewalks at the Reedy Point Bridge will be measured for payment by the square foot of horizontal concrete repaired. Payment will be made at the contract price per unit for Bid Item No. R6, "Horizontal Concrete Spall Repairs".

3.6.5 Vertical/Overhead Concrete Spall Repairs, Reedy Point Bridge

Vertical/overhead concrete spall repairs to include repair of spalls and delaminated areas in the substructure, parapets and deck overhangs at the Reedy Point Bridge will be measured for payment by the square foot of vertical/overhead concrete repaired. Payment will be made at the contract price per unit for Bid Item No. R7, "Vertical/Overhead Concrete Spall Repair".

-- End of Section --

SECTION 03361

APPROACH ROADWAY REPAIRS

PART 1 GENERAL

1.1 SCOPE

The work covered by this section consists of furnishing all labor, materials, plant and equipment, and performing all operations required for concrete spall repairs, crack sealing and joint sealing in the approach slabs and roadways of the Delaware City Bridge and joint repairs, concrete spall repairs, and crack sealing in the approach roadways of the Reedy Point Bridge, as specified herein and shown on the contract drawings.

1.2 REFERENCES

The publications listed below form a part of this specification to the extent referenced. The publications are referred to in the text by basic designation only.

AMERICAN SOCIETY FOR TESTING AND MATERIALS (ASTM)

ASTM C 109	(1995) Compressive Strength of Hydraulic Cement Mortars (Using 2-in or 50-mm Cube Specimens)
ASTM C 403	(1997) Standard Test Method for Time of Setting of Concrete Mixtures by Penetration Resistance

DELAWARE DEPARTMENT OF TRANSPORTATION (DelDOT)

Standard Specifications	(July, 1985 Edition, including latest revisions) Specifications for Road and Bridge Construction

STEEL STRUCTURES PAINTING COUNCIL (SSPC)

SSPC SP 10	(1991) Near-White Blast Cleaning

1.3 SUBMITTALS

Government approval is required for submittals with a "GA" designation; submittals having an "FIO" designation are for information only. The following shall be submitted in accordance with Section 01300 SUBMITTAL PROCEDURES:

SD-01 Data

Concrete Repair Material; GA CO; Epoxy Patching Material; GA CO; Joint Sealant; GA CO

Manufacturer's current printed product description, material safety data sheets (MSDS), and technical data sheets for all concrete repair material,

epoxy patching material, and joint sealant shall be submitted prior to performing any concrete work. Data shall include complete instructions for surface preparation, mixing, application, curing, and cleanup of all concrete material.

SD-08 Statements

Delivery Tickets; GA CO

Copies of certified delivery tickets for all concrete used in the repairs and in the curb and sidewalk, shall be submitted to the Contracting Officer at the time of delivery to the work site.

SD-9 Reports

Concrete Tests; GA CO

The Contractor shall submit for approval certified copies of all test data and test reports for air content, slump, and strength of the concrete. The compressive strength tests shall be performed at 4 hours, 24 hours, and 28 days

SD-13 Certificates

Concrete Repair Material; GA CO; Joint Sealant; GA CO

Concrete repair material and joint sealant will be accepted on the basis of a manufacturer's certification of compliance. No concrete or joint sealant shall be used until notice of acceptance has been given by the Contracting Officer. Concrete repair material and joint sealant may be subjected to check testing by the Government from samples obtained at the project site.

Welded Wire Fabric; GA CO; Epoxy Patching Material; GA CO

Certificates of compliance attesting conformance with the specifications shall be submitted.

PART 2 PRODUCTS

2.1 APPROACH SLAB AND ROADWAY REPAIRS

2.1.1 Rapid Set Concrete Repair Material

Rapid set concrete repair material shall be Pyrament 505 Rapid Concrete Repair Material as manufactured by Pyrament Division of Lone Star Industries, Inc., Houston, Texas 77067, or approved equal. The material shall be suitable for bridge deck repairs and shall have the following properties:

Time of Set, ASTM C 403, Final		30-45 minutes
Consistency, ASTM C 109, 15 minutes		105%
Compressive Strength, ASTM C 109 Modified		
(Without Coarse Aggregate):	3 hours	3,500 psi
	1 day	6,000 psi
	7 days	10,000 psi
Freeze/Thaw Resistance, ASTM C 466		
(Wet-Wet Method) Durability Factor	after 300 cycles	Greater than 96

Rapid set concrete repair material shall also be capable of being placed

using conventional equipment and techniques, and shall have low volume change and high bond strength.

2.1.2 Welded Wire Fabric

Welded wire fabric shall conform to Standard Specifications, Section 819 "Wire Mesh Reinforcement", with galvanized finish. Dimensions and gauge shall be as shown on the contract drawings.

2.1.3 Deformed Bars

Deformed bars shall be epoxy coated steel in accordance with Section 604 of the Standard Specifications.

2.1.4 Dowel Bars

Dowel bars shall be epoxy coated steel and conform to Subsection 501.08 of the Standard Specifications and shall include expansion spacer caps where required, as indicated on the drawings.

2.1.5 Non-Shrink Grout

Non-shrink grout shall be a gas-liberating or expansive-cement grout.

2.1.6 Premolded Joint Filler Material

Cork or rubber filler material conforming to Section 503.09 of the Standard Specifications. Thickness of material shall be as shown on the drawings.

2.1.7 Bond Breaking Tape

The bond breaking tape shall be a flexible, nonshrinkable, nonabsorbing, nonstaining, and nonreacting adhesive-backed tape, as recommended by the manufacturer. The bond breaker tape shall be approximately 1/8-inch wider than the nominal width of the joint and shall not bond to the joint sealant.

2.2 HOT-POURED JOINT SEALANT

Hot-poured joint sealant shall be in accordance with Subsection 501.33 of Standard Specifications.

2.3 CURING MATERIAL

Curing materials shall be as recommended by the manufacturer.

PART 3 EXECUTION

3.1 LOCATION OF WORK

Concrete repairs shall be performed at the locations shown on the Contract Drawings.

3.2 REPAIR DIMENSIONS

Locations and general dimensions of repair areas are shown or provided in tables on the contract drawings. The approximate dimensions of repair are as shown on the contract drawings as determined during the 1998 Bridge Inspection and shall be used for bid purposes. The Contractor shall sound all concrete to determine the limits of the spalled and/or unsound concrete

and mark the area to be repaired. As stated on the contract drawings, the spalled and unsound concrete shall be removed to a 3-inch minimum width of sound concrete all around. The limits of approach roadway joint repairs shall be as shown on the contract drawings. Upon approval of the repair area by the Contracting Officer, the Contractor may proceed with repairs.

3.3 SURFACE PREPARATION

3.3.1 General

Areas designated for repair shall be prepared in accordance with the contract drawings. The limits of spalls and joint repairs shall be sawcut to a depth of 3/4-inch all around at the dimensions determined in paragraph General. Concrete shall be removed to 1 inch beyond existing reinforcing steel or to sound concrete, whichever is greater. Pneumatic hammers heavier than 30 pound class shall not be used. Pneumatic hammers and mechanical chipping tools shall not be operated at an angle in excess of 45 degrees relative to a plane perpendicular to the surface of the repair surface. After removal of unsound concrete, exposed surfaces of sound concrete shall be sandblasted and all dirt, oil, grease, dust, loose particles of aggregate, and other substances which may inhibit bonding of the repair material to existing concrete shall be removed. If in the opinion of the Contracting Officer excessive concrete has been removed, no payment will be made for that amount in excess of what is deemed necessary for the repair. All surfaces to receive the concrete repair materials shall be rough in profile to ensure a good bonding surface. Offsets which would cause an abrupt change in thickness without suitable reinforcement shall be chipped off or scarified. All debris resulting from the removal operations shall be disposed of off-site at the Contractor's expense. The Contractor shall provide safe, appropriate means for the Contracting Officer to inspect all concrete repair work.

3.3.1.1 Approach Roadway Joint Repairs, Reedy Point Bridge

At locations where repairs are to be made in one lane only, the existing dowels at the longitudinal joint shall be cut flush along the face of the existing slab within the repair area.

3.3.2 Reinforcement

3.3.2.1 Concrete Removal

Care shall be used when working around existing approach slab or roadway reinforcing wire mesh or dowels to prevent damage to, or the loosening of, the steel. Any damage resulting from the Contractor's operations shall be repaired as directed by the Contracting Officer, at no additional cost to the Government.

3.3.2.2 Cleaning

All exposed reinforcement except epoxy-coated steel reinforcement shall be blast cleaned in accordance with SSPC SP 10immediately prior to placement of concrete patch material. Epoxy-coated reinforcement shall receive a touch-up coating of epoxy patch material as specified in paragraph "Epoxy Coated Reinforcement". Reinforcement shall be free of rust, grease, oil, and other bond inhibiting materials.

3.3.2.3 Epoxy-Coated Reinforcement

Any epoxy-coated steel reinforcement surfaces which have lost their epoxy coating during concrete removal shall be touched up with epoxy patching material according to the manufacturer's instructions. The coating shall be free from holiday, pin-holes, bubbles, runs, ridges, drops, waves, laps, and variations in texture. The coating shall be applied in such a manner as to produce an even continuous film of uniform thickness. Concrete surfaces shall be protected from the effects of coating operations. Epoxy protective coating operations shall only be performed when the prepared steel surfaces are dry and conditions are within the coating manufacturer's temperature and humidity ranges. All reinforcing dowel surfaces shall be coated as soon as practicable after cleaning and approval by the Contracting Officer before visible oxidation appears. The application of the coating shall not be delayed more than 8 hours after cleaning. Film thickness of coating after curing shall be not less than 5 mils. Epoxy protective coating shall be allowed to cure as recommended by the coating manufacturer's printed instructions before placing concrete repair material.

3.4 CONCRETE REPAIRS

3.4.1 General

Concrete repair material shall be mixed, placed, finished and cured in accordance with the manufacturer's recommendation. Surfaces shall be saturated with clean water prior to placement of concrete, but standing water shall not be present during placing of repair material. Concrete repair material shall be scrubbed into substrate, filling all pores and voids and shall be forced against edge of repair, working toward the center prior to placement of concrete repair material into the repair.

3.4.2 Reinforcement

3.4.2.1 Steel Dowel Bar Installation

Smooth and deformed steel dowel bars shall be installed at the locations indicated on the contract drawings. Dowel bars shall be installed transversely or longitudinally at the spacings indicated in the approach roadway. The first dowel bar shall be a minimum distance of 12 inches from the edge of the joint repair. Holes shall be drilled in the existing concrete roadway slabs to the diameter shown. Deformed bars and fixed ends of dowel bars for transverse joints shall be embedded in existing concrete roadway slabs using non-shrink grout on both sides of the joint. Grout shall be forced around the ends of the dowel bars embedded in the existing concrete roadway slabs. Contractor shall ensure that the grout fills the void around the bar completely and that there are no air pockets present. The ends of the smooth dowel bars that will be embedded within the new concrete shall be coated with grease of graphite paste in order to prevent the steel from bonding to the new concrete.

3.4.2.2 Installation of Welded Wire Fabric Reinforcement

Existing welded wire fabric reinforcement shall be removed from the area to be repaired, leaving a small area of overlap exposed. New welded wire fabric reinforcement shall be provided and tied to the exposed overlap of the existing welded wire fabric reinforcement with wire ties. New welded wire fabric reinforcement will require inspection and approval by the Contracting Officer prior to the placement of concrete repair material.

3.4.3 Approach Roadway Joint Repairs, Reedy Point Bridge

The Contractor shall perform joint repairs at the locations shown on the Contract Drawings. Welded wire fabric reinforcement, deformed bars, and smooth dowel bars with expansion spacer caps shall be provided as required and shall be installed as specified in paragraph Reinforcement. The Contractor shall take care when placing concrete repair material around the welded wire fabric reinforcement and dowel bars to ensure that reinforcement remains oriented in a direction appropriate to the roadway. When the joint repair extends across both lanes of the roadway, the work shall be performed in two stages so that one lane of traffic can be maintained at all times. At locations where repairs are to be made in one lane only, damaged or unsound concrete on slab edge along existing longitudinal joint shall be patched with mortar and a bond breaker shall be placed on the vertical face between the new and existing concrete slabs. Faces of existing concrete slabs shall be cleaned prior to placement of new concrete. New and existing concrete edges, including longitudinal joint key, shall be finished as shown on the contract drawings. The slab shall be finished to match the existing roadway cross section and all finished elevations shall match existing elevations.

3.4.3.1 Construction Joints

Transverse construction joints shall be provided where indicated on the contract drawings. Immediately after concrete has cured, the concrete shall be sawcut 1/2 inch as indicated. New roadway edges shall be tool finished to 1/8" radius, and existing roadway edges shall be ground to a 45 degree chamfer as shown. Neoprene preformed joint seal shall be installed in construction joint. Construction joints between new concrete pavement and existing shoulder and longitudinal construction joints shall be sealed with a hot-poured joint sealant.

3.4.3.2 Expansion Joints

Premolded joint filler material shall be installed in expansion joints prior to concrete placement. New and existing roadway edges shall be ground 1/8 inch or chamfered as shown. Immediately after concrete has cured, bond breaking tape shall be placed on top of the premolded joint filler material and the joint shall be sealed with hot-poured joint sealant.

3.4.4 Approach Slab and Roadway Spall Repairs

The Contractor shall perform spall repairs in the approach slabs and roadways at the locations indicated on the contract drawings for both bridges. Spall repair limits shall include associated or nearby cracks in roadway. Welded wire fabric reinforcement shall be provided as required and shall be installed as specified in paragraph Reinforcement. Concrete repair material shall be placed in accordance with manufacturer's instructions. Spall repairs adjacent to existing transverse pavement joints shall be formed prior to concrete placement with a filler material to match the existing joint opening. The joint shall be sealed with a hot-poured joint sealant prior to opening the roadway to traffic, including construction traffic.

3.5 CRACK SEALING, APPROACH ROADWAY AND SHOULDERS

Existing cracks in the approach roadways and shoulders at the locations shown on the drawings shall be cleaned of all dirt and debris by use of compressed air or other approved method, and sealed with hot-poured joint

sealant. Any existing deteriorated sealant shall be removed from the crack and pavement surface prior to placing new hot-poured joint sealant. Contractor shall ensure that material has cooled and dried prior to permitting vehicular traffic on the sealed areas.

3.6 JOINT SEALING, DELAWARE CITY BRIDGE

The transverse joint between the approach roadway and the concrete approach slab at the north and south approaches, Delaware City Bridge, shall be cleaned of all dirt and debris by use of compressed air or other approved method and sealed with hot-poured joint sealant. Contractor shall ensure that material has cooled and dried prior to permitting vehicular traffic on the sealed joint.

3.7 CONCRETE TESTING

The Contractor shall perform tests for air content, slump, and strength of the concrete materials. Tests shall be performed as recommended by the manufacturer of the material. The compressive strength tests shall be performed at 4 hours, 24 hours, and 28 days.

3.8 MEASUREMENT AND PAYMENT

3.8.1 Approach Roadway Joint Repairs, Reedy Point Bridge

Approach roadway joint repairs at the Reedy Point Bridge will be measured for payment by the square foot of concrete repaired. Payment will be made at the contract price per unit for Bid Item No. R8, "Approach Roadway Joint Repairs".

3.8.2 Approach Roadway Spall Repairs, Reedy Point Bridge

Approach roadway spall repairs at the Reedy Point Bridge will be measured for payment by the square foot of concrete repaired. Payment will be made at the contract price per unit for Bid Item No. R9, "Approach Roadway Spall Repairs".

3.8.3 Crack Sealing, Reedy Point Bridge

Cleaning and sealing cracks in the approach roadway and bituminous shoulders with hot-poured joint sealant at the Reedy Point Bridge will not be measured for payment and all costs in connection therewith shall be included in the contract lump sum price for Bid Item No. R10, "Crack Sealing in Approach Roadways and Shoulders".

3.8.4 Approach Slab and Roadway Spall Repairs, Delaware City Bridge

Approach slab and roadway spall repairs at the Delaware City Bridge will be measured for payment by the square foot of concrete repaired. Payment will be made at the contract price per unit for Bid Item No. D5, "Approach Slab/Roadway Spall Repairs".

3.8.5 Crack Sealing, Delaware City Bridge

Cleaning and sealing cracks in the approach roadways with hot-poured joint sealant at the Delaware City Bridge will not be measured for payment and all costs in connection therewith shall be included in the contract lump sum price for Bid Item No. D6, "Crack Sealing in Approach Roadways".

3.8.6 Joint Sealing, Delaware City Bridge

Cleaning and sealing the transverse joints between the approach roadways and approach slabs with hot-poured joint sealant at the Delaware City Bridge will not be measured for payment and all costs in connection therewith shall be included in the contract lump sum price for Bid Item No. D7, "Joint Sealing in Approach Roadways".

-- End of Section --

SECTION 03600

BRIDGE PIER CRACK REPAIR

PART 1 GENERAL

1.1 SCOPE

The work covered by this section consists of furnishing all labor, materials, plant and equipment, and performing all operations required for repairing cracks in the piers of Reedy Point Bridge, as specified herein and shown on the contract drawings.

1.2 REFERENCES

The publications listed below form a part of this specification to the extent referenced. The publications are referred to in the text by basic designation only.

AMERICAN SOCIETY FOR TESTING AND MATERIALS (ASTM)

ASTM C 881	(1990) Epoxy-Resin-Base Bonding Systems for Concrete
ASTM D 638	(1995) Standard Test Method for Tensile Properties of Plastics
ASTM D 695	(1991) Standard Test Method for Compressive Properties of Rigid Plastics
ASTM D 732	(1999) Standard Test Method for Shear Strength of Plastics by Punch Tool
ASTM D 790	(1998) Standard Test Methods for Flexural Properties of Unreinforced and Reinforced Plastics and Electrical Insulating Materials

1.3 SUBMITTALS

Government approval is required for submittals with a "GA" designation; submittals having an "FIO" designation are for information only. The following shall be submitted in accordance with Section 01300 SUBMITTAL PROCEDURES:

SD-01 Data

Epoxy Adhesive Sealer; GA CO; Epoxy Injection Adhesive; GA CO

Manufacturer's descriptive catalog data for the epoxy adhesive sealer and epoxy injection adhesive shall be submitted for approval.

SD-13 Certificates

Epoxy Adhesive Sealer; GA CO; Epoxy Injection Adhesive; GA CO

The Contractor shall submit certificates of compliance attesting that the epoxy adhesive sealer and epoxy injection adhesive meets the requirements

specified herein. No material shall be used until notice of acceptance has been given by the Contracting Officer. Materials may be subjected to check testing by the Government from samples obtained at the project site.

PART 2 PRODUCTS

2.1 EPOXY ADHESIVE SEALER

Epoxy adhesive sealer shall be Sikadur 31, Hi-Mod Gel, or approved equal two-component, 100% solids, solvent-free, moisture-tolerant, high-modulus, structural epoxy paste/adhesive meeting ASTM C 881. Properties of the epoxy adhesive sealer shall enable it to be mixed, applied around injection ports prior to pressure-injection grouting. The epoxy adhesive sealer shall have the following properties:

Pot Life	25-45 minutes
Tack-Free Time to Touch	2-3 hours
Consistency (1/2 in. thick)	non-sag
Compressive Strength (ASTM D 695, 73 deg F)	10,000 psi
Tensile Strength (ASTM D 638)	3,000 psi
Shear Strength (ASTM D 732)	3,800 psi
Flexural Strength (ASTM D 790)	3,700 psi

2.2 EPOXY INJECTION ADHESIVE

Epoxy adhesive shall be Sikadur 35 Hi-Mod LV or approved equal two-component, 100% solids, solvent-free, moisture tolerant, low-viscosity high-strength, multi-purpose epoxy resin adhesive meeting ASTM C 881, Type 1, Grade 3, Class B and C for epoxy resin adhesives. Mix ratio shall be as recommended by the epoxy adhesive manufacturer. When mixed, the product shall produce a smooth, non-abrasive adhesive. Epoxy resin adhesive shall have the following minimum mechanical properties after 28 days:

Compressive Strength (ASTM D 695, 73 deg F)	10,000 psi
Tensile Strength (ASTM D 638)	7,000 psi
Shear Strength (ASTM D 732)	4,500 psi
Flexural Strength (ASTM D 790)	12,000 psi
Pot Life	20-30 minutes

2.3 Injection Ports

Injection ports shall be as required for either manual or automated application, as recommended by the epoxy injection adhesive manufacturer and shall be surface mounted or core drilled as required for maximum effectiveness.

PART 3 EXECUTION

3.1 SURFACE PREPARATION

3.1.1 General

Crack sealing work in the vicinity of water shall be performed at low tide to ensure the most surface exposure of cracks. Concrete surface of piers shall be clean and free from mud, vegetation, or debris. Crack shall be blown clean with compressed air prior to placement of injection ports and epoxy adhesive sealer.

3.1.2 Crack Preparation

After completion of surface preparation procedures, injection port devices shall be set as required by the manufacturer. Spacing of the injection ports shall not exceed the thickness of the substrate and shall be accomplished as required to achieve the travel of the epoxy injection adhesive for the pressure injection grouting between the ports and fill the cracks to the maximum. The epoxy adhesive sealer shall be applied to the pier surfaces to seal over the cracks and around each injection port to provide an adequate seal to prevent the escape of the epoxy injection adhesive for the injection grouting. Epoxy adhesive sealer shall be proportioned, mixed and applied in accordance with the manufacturer's instructions. Epoxy adhesive sealer shall only be applied when the air and water temperature are greater than the minimum application temperature recommended by the epoxy adhesive manufacturer.

3.1.3 CRACK SEALING

Sufficient time shall be allowed for the epoxy adhesive sealer to set prior to initiate pressure injection operations. Epoxy injection adhesive shall be applied under pressure into the injection ports on both sides of the pier. Pressure injection grouting of the crack may be performed manually or by automated pressure injection equipment. Epoxy adhesive injection shall be started at the lowest port and shall proceed until adhesive starts to extrude from the next highest port at which time injection shall be moved to that port. Injection shall proceed in this manner vertically along the entire length of the crack until all ports have been injected with epoxy adhesive and the crack is completed sealed up to the top of the pier. The working pressure during injection shall be constant in order to achieve maximum filling and penetration without the inclusion of air pockets or voids in the epoxy injection adhesive. The Contracting Officer may direct modifications to the injection system if it is determined that sufficient injection pressure is not being developed or that the repair is not being properly made.

3.1.4 FINISHING

After the epoxy injection adhesive has cured, the injection ports shall be removed and excess surface sealant removed. The surface of the pier shall be ground smooth to match existing.

3.1.5 MEASUREMENT AND PAYMENT

Repair of the existing cracks in the piers of Reedy Point Bridge specified in this section will be measured for payment by the linear foot of crack repaired. Payment will be made at the contract price per foot for Bid Item No. R11, "Bridge Pier Crack Repair".

-- End of Section --

THIS PAGE HAS BEEN LEFT INTENTIONALLY BLANK

SECTION 05120

STRUCTURAL STEEL REPAIRS

PART 1 GENERAL

1.1 SCOPE

The work covered by this section consists of furnishing all labor, materials and equipment and performing all operations required for repairs to existing structural steel including replacing fasteners, tightening existing fasteners, removing steel deck forms, repairing walkway support plates and handrails, drilling drain holes, and modifying the existing ladders and cages at the Reedy Point Bridge, and repairing a crack on the underside of the roadway dam support channels at the Delaware City Bridge, as specified herein and shown on the drawings.

1.2 REFERENCES

The publications listed below form a part of this specification to the extent referenced. The publications are referred to in the text by basic designation only.

AMERICAN ASSOCIATION OF STATE HIGHWAY AND TRANSPORTATION OFFICIALS (AASHTO)

AASHTO-01	(1993) Standard Specification for Highway Bridges, with all Interim Specifications

AMERICAN INSTITUTE OF STEEL CONSTRUCTION (AISC)

AISC S 329	(1986) Allowable Stress Design Specification for Structural Joints Using ASTM A 325 or ASTM A 490 Bolts

AMERICAN SOCIETY FOR TESTING AND MATERIALS (ASTM)

ASTM A 36	(1996) Carbon Structural Steel
ASTM A 123	(1989a) Zinc (Hot-Dip Galvanized) Coatings on Iron and Steel Products
ASTM A 153	(1995) Zinc Coating (Hot-Dip) on Iron and Steel Hardware
ASTM A 325	(1996) Structural Bolts, Steel, Heat Treated, 120/105 ksi Minimum Tensile Strength
ASTM A 563	(1994) Carbon and Alloy Steel Nuts
ASTM F 436	(1993) Hardened Steel Washers

AMERICAN WELDING SOCIETY (AWS)

AWS D1.5	(1995) Bridge Welding Code

AWS A2.4 (1993) Symbols for Welding, Brazing and Nondestructive Examination

CODE OF FEDERAL REGULATIONS (CFR)

29 CFR 1926.62 (1996) Lead

STEEL STRUCTURES PAINTING COUNCIL (SSPC)

SSPC SP-3 (1995) Power Tool Cleaning

1.3 SUBMITTALS

Government approval is required for submittals with a "GA" designation; submittals having an "FIO" designation are for information only. The following shall be submitted in accordance with Section 01300 SUBMITTAL PROCEDURES:

SD-04 Drawings

Structural Steel; GA CO

Shop drawings shall be submitted for approval. Drawings shall include necessary field measurements and all shop and erection details. Members and connections for any portion of the structure not shown on the Contract Drawings shall be detailed by the fabricator and indicated on the shop drawings. All welds shall be indicated by standard welding symbols of the AWS A2.4.

Record Drawings; GA CO

The Contractor shall keep a careful record during the progress of the work of all changes and corrections from the layouts shown on the Contract Drawings. The Contractor shall document such information on one set of record drawings promptly, but in no case less than on a weekly basis. The record drawings shall be furnished to the Contracting Officer at the conclusion of the contract.

Drainage Hole Drilling Plan; GA CO

The Contractor shall furnish a detailed plan for drilling drainage holes in the structural members indicated in this section, including method of access, method of drilling, and all other pertinent details, including sketches of each location showing proposed arrangment of holes, spacing and location of drilled hole in cross-section of member.

SD-08 Statements

Welder Qualifications; GA CO

The Contractor shall furnish certified copies of welder qualifications test records showing qualifications in accordance with AWS D1.5.

SD-13 Certificates

Structural Steel; High Strength Bolts; Nuts; Washers; GA CO

Certificates of compliance shall be submitted for approval. Certified copies of mill test reports shall be furnished for structural steel, high

strength bolts, nuts and washers.

SD-14 Samples

High Strength Bolts; Nuts; Washers; Allen Head Bolts; GA CO

Random samples of high-strength bolts, nuts and washers as delivered to the job site, may be taken if requested, in the presence of the Contracting Officer and provided to the Contracting Officer for testing to establish compliance with specified requirements.

1.3.1 GENERAL REQUIREMENTS

Structural steel fabrication and erection shall be performed by an organization experienced in structural steel work of equivalent magnitude. The Contractor shall be responsible for correctness of detailing, fabrication, and for the correct fitting of structural members. The Contractor shall verify all measurements and shall take all field measurements necessary before fabrication. AASHTO-01 shall govern the work. Welding shall be in accordance with AWS D1.5. Surfaces to be welded must be free from rust scale, paint, grease, water, etc. High strength bolting shall be in accordance with AISC S 329.

1.3.2 RESPONSIBILITY FOR ERRORS

The Contractor shall be responsible for all errors of detailing, fabrication, and for the correct fitting of the structural members.

1.3.2.1 STORAGE

Material shall be stored out of contact with the ground in such a manner and location as to minimize deterioration.

PART 2 PRODUCTS

2.1 MATERIALS

2.1.1 Structural Steel

Carbon grade steel shall conform to ASTM A 36.

2.1.3 High Strength Bolts, Nuts and Washers

High strength bolts shall conform to ASTM A 325. Nuts and washers shall conform to ASTM A 563 and ASTM F 436, respectively.

2.1.1 Allen Head Bolts

Allen Head Bolts shall conform to ASTM A 325 with self-locking nuts and hardened washers, beveled where required. See reference drawing no. 35443 - to be replaced in kind.

PART 3 EXECUTION

3.1 FABRICATION

Fabrication of members for the modification of the ladders and cages shall be in accordance with the applicable provisions of AASHTO-01. Structural steel shall be fabricated to the dimensions shown on the

contract drawings. Steel tread plate shall be fabricated to the dimensions shown on the contract drawings.Fabrication shall be done in the shop to the greatest extent possible. All new structural steel and the steel tread plate is to be cleaned and painted in accordance with Specification Section 09900 PAINTING.

3.2 FASTENER REMOVAL AND BOLT INSTALLATION

New high-strength bolts of the same nominal diameter as the rivets and bolts being removed shall be installed. Bolts of sufficient length to project a minimum of 1/16 inch beyond the nut shall be used. If, in the opinion of the Contracting Officer, the rivet or bolt shanks cannot be removed by punching without damaging the base metal, remove the shank by drilling. If any structural steel to remain in place is damaged, the material shall be repaired or replaced as directed by the Contracting Officer, at no additional cost to the Government. If the new bolt cannot be placed in the hole originally occupied by the rivet, ream the hole to proper size. If reaming produces an oblong hole in any material, the largest diameter of which is more than 3/16 inch larger than the diameter of the removed rivet, increase the diameter of the new bolt by one size and ream the hole to fit the larger bolt. Prior to installing each new bolt, remove all nicks, burrs, corrosion, scale, paint and foreign substances from inside the hole and from the surfaces around the hole with a power tool grinding wheel according to SSPC SP-3 to endure proper seating of the nut, the bolt head, and the washers. Any damage to existing painted surfaces adjacent to fastener removal areas shall be cleaned and painted in accordance with Specification Section 09900 PAINTING.

3.3 Rivet Removal

Rivets shall be removed by shearing the rivet head using a pneumatic breaker (helldog), and driving out the rivet shank with a pneumatic punch.

3.4 Bolt Removal

Bolts shall be removed by one of the following methods:

a. Remove nut and drive out bolt by manual or pneumatic tools.

b. Shear bolt head using a pneumatic breaker (helldog), and drive out bolt shank with a pneumatic punch.

3.5 MISCELLANEOUS STRUCTURAL STEEL REPAIRS

Miscellaneous metalwork shall be well formed to shape and size, with sharp lines and angles and true curves. Exposed surfaces of work in place shall have a smooth finish, unless otherwise approved. Where tight fits are required, joints shall be milled. Work shall be accurately set and securely fastened in place. Installation shall be in accordance with manufacturer's installation instructions and approved drawings, cuts, and details. The Contractor shall repair or replace any structural steel to remain in place damaged by construction operations as directed by the Contracting Officer at no additional cost to the Government. All existing steel members which require removal and reinstallation to facilitate installation of new members shall be cleaned and painted in accordance with Specification Section 09900 PAINTING.

3.5.1 Ladder and Cage Modifications, Reedy Point Bridge

The existing access ladders and cages at Piers N1 and S1, shall be modified as shown on the contract drawings. The Contractor shall remove the existing bottom platforms and the existing ladder side rails shall be cut 6 inches below the center of the last rung to remain. The ladder extension shall be installed as shown. Side rails shall be connected with splice plates and high strength bolts. Ladder extension, constructed from siderail channels and ladder rungs to match existing, shall be supported by connection angles and bent plates to bottom of existing strut, as shown on drawings. Ladder rungs shall not exceed 12 inch spacing. Existing vertical cage straps shall be cut in an alternating pattern, 6 inches minimum. New vertical cage straps shall be attached to existing with splice plates and high strength bolts. New horizontal straps shall be welded to vertical straps as shown. High strength bolts shall be installed so that nuts and threaded ends of bolts shall face outward. The front two existing vertical straps shall be cut at a height of 6 feet from the top of the pier to allow access to the top of the pier as shown. A small section of horizontal strap shall be welded to the two cut vertical straps and the adjoining full length vertical straps on either side.

3.5.2 Walkway Transverse Support Repair, Reedy Point Bridge

The Contractor shall remove existing cracked or broken walkway transverse supports from underneath the walkway. Install new transverse walkway support plate with high strength bolts and weld to walkway plate as shown.

3.5.3 Walkway Repair, Panel Point 13, Reedy Point Bridge

The Contractor shall remove the existing deteriorated connection angles, walkway support angle, handrail and walkway plate at the location and to the limits shown on the contract drawings. New connection angles, new walkway support angle, new handrail and new grating of the sizes and lengths shown shall be installed using high strength bolts and welding at the locations shown.

3.6 Fastener Replacement

The Contractor shall replace loose, missing or deteriorated bolts or rivets in the following locations(if no number given then only one fastener) as designated by the Contracting Officer:

a. East girder, third floorbeam south of Pier S20. Lateral brace to girder web connection, one bolt.

b. West girder, third floorbeam south of Pier S19. Horizontonal connection plate to web of girder, one bolt.

c. West girder, first floorbeam south of Pier S15. Floorbeam to connection plate, one of six bolts.

d. East girder, second floorbeam south of Pier S14. Lateral brace to girder web connection, one of six bolts.

e. First bay north of Pier S14. Center lateral bracing connection, one bolt.

f. Third bay south of Pier S14. Center lateral bracing connection.

g. Second bay south of Pier S14. Center lateral bracing connection, one

bolt.

h. First bay south of Pier S14. Center lateral bracing connection.

i. Second bay south of Pier S13. Center lateral bracing connection.

j. First bay south of Pier S13. Center lateral bracing connection, one bolt.

k. East girder, fourth floorbeam south of Pier S12. Lateral brace to girder web connection, one of six bolts.

l. West girder, first floorbeam south of Pier S12. Lateral brace to girder web connection, one of six bolts.

m. West girder, second floorbeam south of Pier S11. Horizontal connection plate to web of girder, one bolt.

n. East girder, third stringer north of Pier S10. Inboard bottom flange, one bolt.

o. West girder, fourth floorbeam south of Pier S8. Lateral brace to girder web connection. 2 bolts.

p. Panel Point 0, south end of lower chord bottom plate connection to sole plate at west truss. 4 bolts.

q. Panel Point L6', east truss, lower lateral bracing bottom horizontal gusset plate.

r. Panel Point L4, east truss, inboard web of bottom chord adjacent to the lateral bracing bottom gusset plate.

s. Panel Point 18, upper sway bracing T-section connection to the east gusset plate of the vertical on the west truss.

t. Panel Point 13, top south clip angle sway bracing connection to upper chord gusset plate at west truss.

u. Panel Point U13, west truss, top chord upper cover plate connection, outboard.

v. Panel Point U11', west truss, diagonal to gusset plate connection , inboard.

w. Panel Points 0, 13, 0', replace all damaged or missing hold-down bolts in the finger dam metal work in the cantilever span (Allen head bolts).

x. Panel Point 0, top chord end diaphragm bottom connection angle.

y. Panel Point 0, south deck truss, the catwalk handrail to the vertical support post connection.

z. East girder, third floorbeam north of Pier N3. Lateral brace to girder web connection, one bolt.

aa. East girder, first floorbeam south of Pier N6. Lateral brace to girder web connection, one bolt.

bb. West girder, fourth floorbeam south of Pier N4. Floorbeam bracket connection to floorbeam bottom flange, four bolts.

cc. West girder, first floorbeam south of Pier N5. Floorbeam bracket connection to floorbeam bottom flange, one bolt.

dd. East girder, third floorbeam south of Pier N20. North lateral brace connection, one bolt.

ee. East girder, first floorbeam south of Pier N21. Center lateral bracing connection, one bolt.

ff. First bay south of Pier N21. Center lateral bracing connection, one bolt.

gg. Stringer 4, Pier N29, bottom diaphragm connection plate. One bolt on either side.

3.7 Steel Deck Form Removal

3.7.1 General

The Contractor shall mark out the limits of the rusted steel deck forms to be removed. Upon approval of the repair area by the Contracting Officer, the Contractor may proceed with removal. Forms shall be removed using non-power hand tools. Burning forms off will not be permitted. Any damage to existing painted surfaces adjacent to steel deck removal shall be cleaned and painted in accordance with Specification Section 09900 PAINTING.

3.7.2 Approximate Dimensions of Removal

All dimensions will be verified and marked-out for Contracting Officer approval, as described above. The approximate dimensions of steel deck form removal are as listed below and shall be used for bid purposes:

a. Span S1-S2, Panel 0-1, between stringer 1-2: 10' x 7' and 3' x 7', between stringer 2-3: 4' x 5' and 15' x 7', between stringer 3-4: 5' x 4' and 5' x 4'.

b. Span S2-S3, Panel 3-4, between Stringers 1 and 2: 4' x 6' and 4' x 6',and between Stringer 3 and the east top chord: 1' x 1' and 3' x 6'.

c. Span S3-S4, between Floorbeams S3-3 and S3-4, between Stringers 1 and 2: approximately 1 square foot.

d. Span S3-S4, between Floorbeams S3-0 and S3-1, between Stringers 1 and 2: approximately 1 square foot.

e. Span N13-N14, between Floorbeams N13-1 and N13-2, and between Floorbeams N13-0 and N13-1: approximately 2 square feet total.

f. Span N11-N12, throughout the span: approximately 100 square feet with 75 square feet between Floorbeams N11-0 and N11-1.

g. Span N10-N11, Bay 4, between Stringers 1 and 2: approximately 25 square feet.

h. Span N9-N10, throughout the span: 150 square feet.

i. North anchor span, Panel 5'-6', between Stringers 3 and 5: approximately 100 square feet.

j. Main span, Panel 11-12, between Stringers 2 and 4: approximately 5 square feet.

k. Span N11-N12, between the west girder and Stringer 1: approximately 25 square feet of deformed and corroded forms.

l. Span N3-N4, south bay: approximately 20 square feet of corroded-through form.

m. Main span, at Panel Point 16, between Stringers 1 and 2: 10 square feet.

n. South anchor span, at Panel Point 3, west truss: 10 square feet.

o. Span S2-S3, Panel 3-4, between Stringers 2 and 3: 7' x 6' and 4' x 6'.

p. Span S5-S6, north bay between west girder and Stringer 1: approximately 6 square feet of form corroded.

q. Span S10-S11, north bay, between west girder and Stringer 2: approximately 25 square feet of deformed forms with several corroded areas.

r. Span S26-S27, Bay 2: 4 square feet.

3.8 DRAINAGE HOLE DRILLING

The Contractor shall drill drainage holes through the following members to eliminate water retention. Locations and spacing of drainage holes shall be detailed by the Contractor as specified in paragraph SUBMITTALS. The Contractor shall make provisions for a Government representative to safely observe all drainage hole drilling. All debris shall be flushed and cleaned from surface of member prior to any drilling work. A maximum of 3 holes shall be drilled in each member. The drainage holes shall be 3/4 inch diameter maximum, and edges of holes shall be ground smooth, leaving no nicks, burrs or rough edges. No burning shall be permitted. The holes shall not be drilled through the throat of an angle or at the web/flange intersection of any member, but adjacent to it. If any cracking or distress is observed in the member during the hole drilling process, the work shall be stopped immediately and the Contractor shall notify the Goverment representative. Any damage to existing painted surfaces adjacent to drilled drainage holes shall be cleaned and painted in accordance with Specification Section 09900 PAINTING. Drainage holes shall be drilled in the following locations:

a. Inside of portal strut at Panel Point U13.

b. Inside of portal strut at Panel Point U13'.

c. Inside of lower lateral strut at Panel Point L10.

d. Wind linkage component at Panel Point L13.

e. Wind linkage component at Panel Point L13'.

3.9 REPAIR OF ROADWAY DAM PLATE

The north roadway dam plate on the Delaware City Bridge shall be repaired at the location shown on the contract drawings. The Contractor shall grind or air arc the cracked area of existing steel dam plate and shall weld (seal) the length of the crack as directed by the Contractor Officer. The repaired area of the roadway dam plate shall be cleaned and painted in accordance with Specification Section 09900 PAINTING.

3.10 MEASUREMENT AND PAYMENT

3.10.1 Fastener Replacement

Replacement of loose, missing, or heavily corroded fasteners and installation of new high-strength bolts at the Reedy Point Bridge will be measured for payment by the number of new high-strength bolts installed. Payment will be made at the contract unit price for Bid Item No. R12, "Fastener Replacement", which shall include full compensation to the Contractor for removal and disposal of existing fasteners designated by the Contracting Officer to be removed, and providing new high-strength bolts, including painting of the new bolts.

3.10.2 Steel Deck Form Removal

Removal of rusted steel deck forms at the Reedy Point Bridge will be measures for payment by the square feet of deck forms removed. Payment will be made at the contract unit price for Bid Item No. R13, "Steel Deck Form Removal", which shall include full compensation to the Contractor for removal and disposal of existing rusted steel deck forms designated and approved by the Contracting Officer to be removed.

3.10.3 Ladder and Cage Modifications

Modifications to the ladders and cages at the Reedy Point Bridge will not be measured for payment and all costs in connection therewith shall be included in the contract lump sum price for Bid Item No. R14, "Ladder and Cage Modifications", which shall include full compensation to the Contractor for all material and labor needed for modifying the ladders and cages and for painting the new material.

3.10.4 Walkway Transverse Support Repair

Repair of walkway transverse supports from underneath the walkway at the Reedy Point Bridge will not be measured for payment and all costs in connection therewith shall be included in the contract lump sum price for Bid Item No. R15, "Walkway Transverse Support Repair", which shall include full compensation to the Contractor for all material and labor needed for installing new transverse walkway support plates with high strength bolts and welding, and for painting the new materials.

3.10.5 Walkway Repair, P.P.13

Repair of walkway at Panel Point 13, at Reedy Point Bridge will not be measured for payment and all costs in connection therewith shall be included in the contract lump sum price for Bid Item No. R16, "Walkway Repair, Panel Point 13", which shall include full compensation to the

Contractor for all material and labor needed for installing new connection angles, new walkway support angle, new handrail and new grating with high strength bolts and welding, and for painting the new materials.

3.10.6 Drainage Hole Drilling

Drainage hole drilling at Reedy Point Bridge will not be measured for payment and all costs in connection therewith shall be included in the contract lump sum price for Bid Item No. R17, "Drainage Hole Drilling", which shall include full compensation to the Contractor for all materials and labor needed for drilling drainage holes and painting the members.

3.10.7 Repair of Roadway Dam Plate

Repair of the roadway dam plate at the Delaware City Bridge will not be measured for payment and all costs in connection therewith shall be included in the contract lump sum price for Bid Item No. D8, "Roadway Dam Plate Repair".

-- End of Section --

SECTION 05125

WELD REMOVAL AND DYE PENETRANT TESTING

PART 1 GENERAL

1.1 SCOPE

The work covered by this section consists of furnishing all labor, materials, plant and equipment, and performing all operations required for the removal of cracked tack welds and performance of nondestructive (dye penetrant) testing on the Reedy Point Bridge, as specified herein and shown on the drawings.

1.2 REFERENCES

The publications listed below form a part of this specification to the extent referenced. The publications are referred to in the text by basic designation only.

CODE OF FEDERAL REGULATIONS (CFR)

29 CFR 1926.62	(1996) Lead

FEDERAL HIGHWAY ADMINISTRATION (FHWA)

FHWA-IP-86-26	(1986) Inspection of Fracture Critical Bridge Members

1.3 SUBMITTALS

Government approval is required for submittals with a "GA" designation; submittals having an "FIO" designation are for information only. The following shall be submitted in accordance with Section 01300 SUBMITTAL PROCEDURES:

SD-01 Data

Dye Penetrant Materials; GA CO

Manufacturer's descriptive data for the dye penetrant materials shall be submitted for approval.

SD-08 Statements

Work Plan; GA CO

The procedures proposed for the accomplishment of the work shall be submitted for approval. The procedures shall include a detailed description of the methods and equipment to be used for the removal of the cracked tack welds from the fracture critical members and for nondestructive dye penetrant testing.

SD-08 Statements

Dye Penetrant Testing Qualifications; GA CO

Personnel usually engaged in dye penetrant testing shall perform all dye

penetrant tests. Contractor shall submit for approval qualification of all personnel who will be performing the testing.

SD-09 Reports

Dye Penetrant Testing; GA CO

Test reports of the dye penetrant testing shall be furnished to the Contracting Officer within 24 hours of completion of the test.

1.4 GENERAL

The Contractor shall assume that the existing paint on all bridge steel contains lead in all spans except the two deck truss spans (Spans N3-N1 and Spans S3-S1), and shall perform work in accordance with 29 CFR 1926.62. Work shall comply with applicable Federal, State and local laws and regulations. The Contractor shall take care to minimize affecting newly painted surfaces when removing tack welds.

PART 2 PRODUCTS

2.1 NONDESTRUCTIVE TESTING MATERIALS

Materials for nondestructive dye penetrant testing shall consist of a standard oil-based liquid dye penetrant and liquid developing agent. A spray-on cleaner may be used, as required by the manufacturer's instructions.

PART 3 EXECUTION

3.1 TACK WELD REMOVAL

The cracked tack welds shall be removed by grinding the welds flush with the base metal. Care shall be taken so as not to gouge the base metal. Flame cutting shall not be permitted. The Contractor shall remove cracked tack welds from the following locations:

a. Panel Point L7': West truss, north anchor arm - east channel of the vertical to a fill plate.

b. Panel Point L7': West truss, north anchor arm - between the interior vertical web and channel.

c. Panel Point L7': East truss, north anchor arm - Two (2) welds between west channel of the vertical to a fill plate.

d. Panel Point L16': West truss, main span - bottom chord web to an interior fill plate at the diaphragm.

e. Member U1L2: Southeast deck truss - Three (3) welds between east channel to top cover plate at mid-height of the diagonal.

f. Member U1L2: Southeast deck truss - between east channel and top cover plate at about one-third of the diagonal length from L2.

g. Member L0'L1': East truss - Two (2) welds at bottom plate and lover corner angles just north of Panel Point L1'.

h. Member U1L2: Southeast deck truss - Two (2) welds at top plate/west

channel connection at about one-third of the diagonal length from L2.

i. Member U1L2: Southwest deck truss - Two (2) welds at bottom plate/east channel connection between second and third handholes from L2.

j. Member U1L2: Southwest deck truss - Two (2) welds at top plate/west channel connection between fifth and sixth handholes and at fifth handhole from L2.

k. Member U3L4: Southeast deck truss - bottom plate/east channel connection at fifth handhole from U3.

l. Member U3L4: Southeast deck truss - bottom plate/east channel connection at fifth handhole from L4.

m. Member U3'L4: Southeast deck truss - Two (2) welds at bottom plate/east and west channel connections at fifth handhole from L4.

n. Member U3'L4: Southeast deck truss - Two (2) welds at bottom plate/west channel connection at fourth handhole from L4.

o. Member U3'L4: Southeast deck truss - Two (2) welds at bottom plate/west channel connection at at fifth handhole from U3'.

p. Member U3'L4: Southeast deck truss - bottom plate/east channel connection at second handhole from U3'.

q. Member U1'L2': Southeast deck truss - top plate/east channel connection just above fourth handhole from L2'.

r. Member U9'L10': West truss - Three(3) welds at top plate/west channel connection at mid-height of diagonal.

s. Member L10U10: East truss - Scupper bracket connections.

t. Member L10U10: West truss - Scupper bracket connections.

u. Member L0'U0': East truss - Scupper bracket connections.

v. Member L0'U0': West truss - Scupper bracket connections.

w. Member U1'L2': Southeast deck truss - east channel to top cover plate at mid-height of diagonal.

x. Member L0'U1': East truss - several erection tack welds.

y. Member L0'U1': West trusses - several erection tack welds.

3.2 NONDESTRUCTIVE TESTING

3.2.1 General

Personnel usually engaged in dye penetrant testing shall perform all dye penetrant tests. The Contracting Officer shall be notified no less than one day prior to the dye penetrant testing so that the Contracting Officer or a representative may be on site.

3.2.2 Dye Penetrant Testing

Nondestructive dye penetrant testing shall be performed at the base metal at each location from which tack welds have been removed to verify that the cracking has not propagated into the base metal. Dye penetrant testing shall be performed in accordance with the procedures outlined in FHWA-IP-86-26. The surface of the base metal to be tested shall be clean and free of any paint, rust scale, grease, oily films or foreign material. Wire brushes shall not be used to clean the area. A sufficient time must be allowed for the penetrant to be entrapped by capillary action in any potential crack. If the results of the dye penetrant testing show that any cracks have occurred in the base metal, the Contracting Officer shall be immediately notified.

3.3 MEASUREMENT AND PAYMENT

The work specified in this section for tack weld removal and dye penetrant testing will not be measured for payment and all costs in connection therewith shall be included in the contract lump sum price for Bid Item No. R18, "Tack Weld Removal and Dye Penetrant Testing". Payment shall include full compensation to the Contractor for access, removal of tack welds and nondestructive dye penetrant testing of affected base metal.

-- End of Section --

SECTION 06110

TIMBER FENDER REPAIRS

PART 1 GENERAL

1.1 SCOPE

The work covered by this section consists of furnishing all labor, materials, plant and equipment, and performing all operations for replacing timber wales, intermediate timber splices, bolts, nuts, washers and steel splice plates on the existing fenders under the Delaware City Bridge as specified herein and shown on the drawings.

1.2 REFERENCES

The publications listed below form a part of this specification to the extent referenced. The publications are referred to in the text by basic designation only.

AMERICAN SOCIETY FOR TESTING AND MATERIALS (ASTM)

ASTM A 36	(1996) Carbon Structural Steel
ASTM A 123	(1989a) Zinc (Hot-Dip Galvanized) Coatings on Iron and Steel Products
ASTM A 153	(1995) Zinc Coating (Hot-Dip) on Iron and Steel Hardware
ASTM A 307	(1994) Carbon Steel Bolts and Studs, 60,000 psi Tensile Strength
ASTM A 563	(1994) Carbon and Alloy Steel Nuts
ASTM F 436	(1993) Hardened Steel Washers

AMERICAN WOOD PRESERVERS ASSOCIATION (AWPA)

AWPA C2	(1995) Lumber, Timbers, Bridge Ties and Mine Ties - Preservative Treatment by Pressure Processes

FEDERAL SPECIFICATIONS (FS)

FS MM-L-751	(Rev. H) Lumber, Softwood

SOUTHERN PINE INSPECTION BUREAU (SPIB)

SPIB-01	(1994) Standard Grading Rules for Southern Pine Lumber

1.3 SUBMITTALS

Government approval is required for submittals with a "GA" designation; submittals having an "FIO" designation are for information only. The following shall be submitted in accordance with Section 01300 SUBMITTAL

PROCEDURES:

SD-04 Drawings

Timber Wales; GA CO

Shop drawings shall be submitted for approval and shall include all member dimensions, wale arrangement, splice locations and connection details.

SD-13 Certificates

Timber Wales; Plates; Fasteners; GA CO

Submit, for approval, certificates of compliance attesting that the timber wales, intermediate timber splices, steel splice plates and fasteners meet the requirements of this specification.

PART 2 PRODUCTS

2.1 MATERIALS

2.2 Timber Wales and Intermediate Timber Splices

Timber wales and intermediate timber splices shall be Southern Yellow Pine No. 1, SR grade as designated by SPIB-01, and be in accordance with FS MM-L-751. Timber wales and intermediate timber splices shall be pressure treated with Chromated Copper Arsenate (CCA), to a final net retention of 2.5 pounds per cubic foot and be in accordance with AWPA C2. Timber wales and intermediate timber splices shall be 6-inches by 10-inches in cross-section. The timbers used for the splices shall be 3-feet in length.

2.3 Steel Splice Plates

Plates shall be 10-inches by 42-inches by 1/2-inch thick and conform to ASTM A 36. Plates shall be hot-dipped galvanized in accordance with ASTM A 123.

2.4 Hex Head Bolts

Bolts shall be 7/8-inch diameter and conform to ASTM A 307, Grade A. Bolt lengths shall be such that they go through the new and existing material and extend past the nut by at least 1-inch. Bolts shall be hot-dip galvanized in accordance with ASTM A 153.

2.4.1 Nuts

Nuts shall conform to ASTM A 563, and be hot-dip galvanized in accordance with ASTM A 153.

2.4.2 Washers

Washers shall have 3-inches O.D. and conform to ASTM F 436. Washers shall be hot-dip galvanized in accordance with ASTM A 153.

PART 3 EXECUTION

3.1 REMOVAL OF EXISTING WALESS

Existing timber wales and all hardware shall be removed as indicated on the

drawings. Existing steel splice plates in the locations indicated on the drawings shall be salvaged for reinstallation. All other materials shall be removed from the work site and disposed of at the Contractor's expense.

3.2 INSTALLATION

New timber wales shall be installed at the locations shown on the drawings. Intermediate timber splices shall be installed as needed, but no more than one intermediate timber splice shall be permitted in each row of the 47-foot lengths and no intermediate timber splices shall be permitted in the 13-foot lengths. New steel splice plates shall be installed on the bottom row of the wales at the turns in the fenders, as shown on the drawings, and shall be bent to the required angle. Six holes shall be drilled in the steel splice plates, using an existing plate or the existing holes in the timber piles as a template, prior to hot-dip galvanizing. Timber wales shall be fastened to each existing timber pile using hex head bolts, (2) washers(front and back), and hex nuts as shown on the drawings. Bolts shall be placed through the existing holes in the piles; no new holes shall be drilled. Timber wales shall be supported by one bolt at each pile, with the exception of the end piles, which have (2) bolts each, as shown on the drawings. All intermediate timber splices shall be of the shape and size indicated in the splice details on the contract drawings. Strong solution of chromated copper arsenate shall be brush-applied to all field cuts and drilled surfaces in timber prior to installation. The existing steel splice plates indicated on the drawings to be salvaged shall be attached to the piles and new timber wales at the same locations. All bolts, nuts and washers removed shall be replaced with new hardware meeting the requirements of this specification.

3.3 MEASUREMENT AND PAYMENT

The work specified in this section will not be measured for payment and all costs in connection therewith shall be included in the contract lump sum price for Bid Item No. D10, "Timber Fender Repairs". This price includes all items incidental to furnishing, delivering and installing the timber wales, intermediate timber splices, steel splice plates, and associated hardware.

-- End of Section --

THIS PAGE HAS BEEN LEFT INTENTIONALLY BLANK

SECTION 07900

PREFORMED JOINT SEALS

PART 1 GENERAL

1.1 SCOPE

The work covered by this section consists of furnishing all labor, materials and equipment, and performing all operations required for replacement of the existing preformed joint seals in joints at the Reedy Point Bridge and in the girder opening frames on the Delaware City Bridge, as specified herein and shown on the drawings.

1.2 REFERENCES

The publications listed below form a part of this specification to the extent referenced. The publications are referred to in the text by basic designation only.

AMERICAN SOCIETY FOR TESTING AND MATERIALS (ASTM)

ASTM D 395	(1989, Rev. 1994) Standard Test Methods for Rubber Property - Compression Set
ASTM D 412	(1992) Standard Test Methods for Vulcanized Rubber and Thermoplastic Rubbers and Thermoplastic Elastomers - Tension
ASTM D 1149	(1991) Standard Test Method for Rubber Deterioration - Surface Ozone Cracking in a Chamber
ASTM D 2240	(1995) Standard Test Method for Rubber Property - Durometer Hardness

FEDERAL SPECIFICATIONS (FS)

FS TT-S-00230	(Rev. C) Sealing Compound: Elastomeric Type, Single Component (For Calking, Sealing and Glazing in Buildings and Other Structures)

STEEL STRUCTURES PAINTING COUNCIL (SSPC)

SSPC SP 6	(1994) Commercial Blast Cleaning

1.3 SUBMITTALS

Government approval is required for submittals with a "GA" designation; submittals having an "FIO" designation are for information only. The following shall be submitted in accordance with Section 01300 SUBMITTAL PROCEDURES:

SD-01 Data

Preformed Compression Seal Material; GA CO; Adhesive; GA CO

The Contractor shall submit for approval, manufacturer's catalog data for all products to be used for replacement of the preformed joint seals, including the manufacturer's recommendations for upturn and downturn procedures. Data shall include recommendation from seal manufacturer's representative as to the type and size of seal for this application.

SD-13 Certificates

Preformed Compression Seal Material; GA CO; Adhesive; GA CO

Manufacturer's certification of compliance attesting that the preformed compression seal material and adhesive meets the requirements of this specification, shall be submitted for approval.

PART 2 PRODUCTS

2.1 PREFORMED COMRESSION SEAL MATERIAL

Preformed compression seals shall be high neoprene which is highly resistant to deterioration from exposure to weather, sunlight, oil, chemicals, heat, abrasion and impact. The seals shall meet the following physical requirements.

Tensile Strength, minimum (ASTM D 412)	2,000 psi
Elongation Break, minimum (ASTM D 412)	250%
Hardness, Type A Durometer (ASTM D 2240)	60 +/-7
Compression Set, 70 hrs. 212 degrees F, maximum (ASTM D 395) Method B	35%
Oil Swell, ASTM oil 3, 70 hrs. 212 degrees F, Weight Change, maximum	45%
Ozone Resistance, 20% Strain, 300 pphm, in air 104 degrees F (ASTM D 1149)	No Cracks

2.2 ADHESIVE

Adhesive to be used for installation of the preformed joint seals shall conform to Federal Specification FS TT-S-00230, Type 1, or as recommended by the seal manufacturer.

PART 3 EXECUTION

3.1 PREFORMED COMPRESSION SEAL DIMENSIONS

The Contractor shall choose preformed compression seal type and size to provide appropriate pressure against the sides of the opening to adequately seal against leakage as per consultation with the seal manufacturer.

3.2 PREPARATION

The Contractor shall remove the existing preformed joint seals from the joints and the girder opening frames to the extent shown on the drawings and dispose of them at his expense. All metal contact surfaces shall be commercial blast cleaned in accordance with the requirements of SSPC SP 6 and the joint seal manufacturer, just prior to installation of the new preformed compression seal material.

3.2.1 INSTALLATION

Neoprene preformed joint seals shall be installed in the joints at the North Approach and at N29 on the Reedy Point Bridge and in the four girder opening frames on the Delaware City Bridge as indicated on the contract drawings. Each seal shall be installed in a continuous length with no splices using an approved lubricant adhesive. All installation procedures, including upturn and downturn procedures for bending of the joint seal material, shall be in accordance with the seal manufacturer's recommendations. No residual adhesive shall be allowed to remain on the road surface, sidewalk or girder opening frame surfaces after completion of installation of seal.

3.2.2 PEDESTRIAN TRAFFIC - DELAWARE CITY BRIDGE

The Contractor shall make available to pedestrian traffic one of the sidewalks on the Delaware City Bridge for the entire length of the contract.

3.2.3 MEASUREMENT AND PAYMENT

3.2.3.1 Joint Seals - Reedy Point Bridge

The replacement of joint seals on the Reedy Point Bridge will not be measured for payment and all costs in connection therewith shall be included in the contract lump sum price for Bid Item No. R19, "Replace Joint Seals".

3.2.3.2 Girder Opening Frame Seals - Delaware City Bridge

The replacement of girder opening frame seals at the Delaware City Bridge will not be measured for payment and all costs in connection therewith shall be included in the contract lump sum price for Bid Item No. D11, "Replace Girder Opening Frame Seals".

-- End of Section --

THIS PAGE HAS BEEN LEFT INTENTIONALLY BLANK

SECTION 09870

PROTECTIVE COATING FOR BRIDGE BEARINGS

PART 1 GENERAL

1.1 SCOPE

The work covered by this section consists of furnishing all labor, materials, plant and equipment, and performing all operations required for cleaning and applying protective coating and lubricant to the bridge expansion and fixed bearings in the stringer spans (beam spans), girder spans, deck and cantilever trusses of the Reedy Point Bridge, as specified herein and shown on the reference drawings.

1.2 REFERENCES

The publications listed below form a part of this specification to the extent referenced. The publications are referred to in the text by basic designation only.

AMERICAN SOCIETY FOR TESTING AND MATERIALS (ASTM)

ASTM D 92	(1990) Flash and Fire Points by Cleveland Open Cup
ASTM D 217	(1994) Cone Penetration of Lubricating Grease

STEEL STRUCTURES PAINTING COUNCIL (SSPC)

SSPC SP 3	(1995) Power Tool Cleaning

1.3 SUBMITTALS

Government approval is required for submittals with a "GA" designation; submittals having an "FIO" designation are for information only. The following shall be submitted in accordance with Section 01300 SUBMITTAL PROCEDURES:

SD-01 Data

Protective Coating; GA CO

The Contractor shall submit for approval manufacturer's literature for the protective coating.

SD-13 Certificates

Protective Coating; GA CO

Certificates of compliance attesting that the protective coating conforms with the specifications.

PART 2 PRODUCTS

2.1 MATERIALS

Protective coating material shall be a permanent soft gel coating for anti-corrosion protection and lubrication of steel structures and components, specially formulated to resist the degrading action of sunlight and wind driven rain. The material shall have the following characteristics:

Color	Off white
Thinning	None Required
Coverage	1,100 sq. ft. at 80 mils per 55 Gals.
No. of Coats	One
Mixing	Single component, none required
Curing Time	None, permanently soft
Specific Gravity	C.89 - 0.91
Flash Point: Cleveland Open Cut (ASTM D 92)	325 degrees F (163 degrees C)
Unworked Penetration (ASTM D 217)	200 - 230
Dropping Point	205 degrees F (96 degrees C)

PART 3 EXECUTION

3.1 APPLICATION

The Contractor shall remove all pack rust and loose flaking rust between the bearing plate and the rockers of the stringer spans (beam spans), girder spans, and deck and cantilever trusses by cleaning with a power tool with a HEPA-filtered vacuum attatchment in accordance with SSPC SP 3. The Contractor shall also remove all rust and clean the exposed portions of the turn pins on the fixed and expansion bearings of the girder spans and deck and cantilever trusses. The space between the top roller plate and rocker nests and between the bottom roller plate and rocker nests of the expansion bearings of the deck and cantilever trusses shall be blown clean with compressed air. All rust blisters shall be broken and all standing water shall be removed from the areas to be coated. Protective coating material shall be applied to the cleaned surfaces of the pins in accordance with the coating manufacturer's recommendations. Protective coating shall be applied with sufficient pressure to expel air and fill all voids solidly. Protective coating shall be applied to fill the space between the rocker and the bearing plate of the fixed and expansion bearings of the stringer spans (beam spans) and girder spans, and the space between the top roller plate and rocker nests and between the bottom roller plate and rocker nests of the expansion bearings of the deck and cantilever trusses.

3.2 MEASUREMENT AND PAYMENT

The work specified in this section will not be measured for payment and all costs in connection therewith shall be included in the contract lump sum price for Bid Item No. R20, "Clean and Lubricate Bridge Bearings".

-- End of Section --

SECTION 09900

PAINTING

PART 1 GENERAL

1.1 SCOPE

The work covered by this section consists of furnishing all labor, materials and equipment, and performing all operations required for cleaning, surface preparation, and application of paint to new structural steel members, new drainage pipe support angles, existing steel members that require removal and reinstallation, new welds, weld removal areas, and any existing steel surfaces where the existing paint has been damaged during fastener removal, welding, and hole drilling.

1.2 REFERENCES

The publications listed below form a part of this specification to the extent referenced. The publications are referred to in the text by basic designation only.

AMERICAN CONFERENCE OF GOVERNMENTAL INDUSTRIAL HYGIENISTS (ACGIH)

ACGIH-02	(1991) 1991-1992 Threshold Limit Values for Chemical Substances and Physical Agents and Biological Exposure Indices

AMERICAN SOCIETY FOR TESTING AND MATERIALS (ASTM)

ASTM D 2697	(1986) Volume Nonvolatile Matter in Clean or Pigmented Coatings
	(1996)Lead

AMERICAN CONFERENCE OF GOVERNMENTAL INDUSTRIAL HYGIENISTS (ACGIH)
FEDERAL STANDARDS (FED-STD)

FED-STD 313	(Rev C) Material Safety Data, Transportation Data and Disposal Data for Hazardous Materials Furnished to Government Activities

STEEL STRUCTURES PAINTING COUNCIL (SSPC)

SSPC SP 6	(1991) Commercial Blast Cleaning

1.3 SUBMITTALS

Government approval is required for submittals with a "GA" designation; submittals having an "FIO" designation are for information only. The following shall be submitted in accordance with Section 01300 SUBMITTAL DESCRIPTIONS:

SD-01 Data

Paint; GA.

The names, quantity represented, and intended use for the proprietary brands of materials proposed to be substituted for the specified materials when the required quantity of a particular batch is 50 gallons or less.

SD-06 Instructions

Mixing and Thinning; GA. Application; GA.

Manufacturer's current printed product description, material safety data sheets (MSDS) and technical data sheets for each coating system. MSDS submittals shall meet the requirements of FED-STD 313. Detailed mixing, thinning and application instructions, minimum and maximum application temperature, and curing and drying times between coats for epoxy, moisture-curing polyurethane, and liquid glaze coatings. Detailed application instructions for textured coatings shall be provided.

SD-09 Reports

Paint; GA.

A statement as to the quantity represented and the intended use, plus the following test report for batches in excess of 50 gallons:

a. A test report showing that the proposed batch to be used meets all specification requirements, or:

b. A test report showing that a previous batch of the same formulation as the batch to be used met all specification requirements, plus, on the proposed batch to be used, a report of test results for properties of weight per gallon, viscosity, fineness of grind, drying time, color, and gloss.

SD-13 Certificates

Lead; GA. Volatile Organic Compound (VOC) Content; GA.

Certificate stating that paints proposed for use contain not more than 0.06 percent lead. Certificate stating that paints proposed for use meet the VOC regulations of the local Air Pollution Control Districts having jurisdiction over the geographical area in which the project is located.

SD-14 Samples

Paint; GA.

While the material is at the site or source of supply, and at a time agreeable to the Contractor and the Contracting Officer, a 1 quart sample of each color and batch, except for quantities of 50 gallons or less, shall be taken by random selection from the sealed containers by the Contractor in the presence of a representative of the Contracting Officer. The contents of the containers to be sampled shall be thoroughly mixed to ensure that the sample is representative. Samples shall be identified by designated name, specification number, manufacturer name and address, batch number, project contract number, intended use, and quantity involved.

1.4 PACKAGING, LABELING, AND STORING

Paints shall be in sealed containers that legibly show the designated name, formula or specification number, batch number, color, quantity, date of manufacture, manufacturer's formulation number, manufacturer's directions including any warnings and special precautions, and name of manufacturer. Pigmented paints shall be furnished in containers not larger than 5 gallons. Paints and thinner shall be stored in accordance with the manufacturer's written directions and as a minimum stored off the ground, under cover, with sufficient ventilation to prevent the buildup of flammable vapors and at temperatures between 40 and 95 degrees F. Paints shall be stored on the project site or segregated at the source of supply sufficiently in advance of need to allow 30 days for testing.

1.5 APPROVAL OF MATERIALS

When samples are tested, approval of materials will be based on tests of the samples; otherwise, materials will be approved based on test reports furnished with them. If materials are approved based on test reports furnished, samples will be retained by the Government for testing should the materials appear defective during or after application. In addition to any other remedies under the contract the cost of retesting defective materials will be at the Contractor's expense.

1.6 ENVIRONMENTAL CONDITIONS

Epoxy coatings shall be applied only within the minimum and maximum temperatures recommended by the coating manufacturer.

1.7 SAFETY AND HEALTH

Work shall comply with applicable Federal, State, and local laws and regulations, and with the ACCIDENT PREVENTION PLAN, including the Activity Hazard Analysis as specified in the CONTRACT CLAUSES. The Activity Hazard Analysis shall include analyses of the potential impact of painting operations on painting personnel and on others involved in and adjacent to the work zone.

1.7.1 Worker Exposures

Exposure of workers to chemical substances shall not exceed limits as established by ACGIH-02, or as required by a more stringent applicable regulation.

1.7.2 Toxic Compounds

Toxic compounds having ineffective physiological properties, such as odor or irritation levels, shall not be used unless approved by the Contracting Officer.

1.7.3 Training

Workers having access to an affected work area shall be informed of the contents of the applicable material data safety sheets (MSDS) and shall be informed of potential health and safety hazard and protective controls associated with materials used on the project. An affected work area is one which may receive mists and odors from the painting operations. Workers involved in preparation, painting and clean-up shall be trained in the safe handling and application, and the exposure limit, for each material which the worker will use in the project. Personnel having a need to use respirators and masks shall be instructed in the use and maintenance of

such equipment.

1.7.4 Coordination

Work shall be coordinated to minimize exposure of building occupants, other Contractor personnel, and visitors to mists and odors from preparation, painting and clean-up operations.

1.8 General Requirement

The Contractor shall assume that the existing paint on all bridge steel contains lead, and shall perform work in accordance with 29 CFR 1926.62. Work shall comply with applicable Federal, State, and local laws and regulations.

PART 2 PRODUCTS

2.1 MATERIALS

2.1.1 Paint for First and Second Coats

The paint shall be a two-component aluminum epoxy mastic, designed for adhesion to rusty steel and deteriorated vinyl and oil-based paints. The first coat shall have a different color than the top coat aluminum color to ensure complete two-coat coverage of all cleaned steel. The color of the first coat shall be easily hidden by the required dry thickness of the aluminum top coat. The paint shall have the following characteristics:

Top Coat Color	Aluminum
Dry Thickness	4 to 6 mils (each coat)
Solids Content (ASTM D 2697 at 75 deg F, one day cure)	90% +/- 2% by volume
Weight per gallon	11.3 +/- 0.5 lbs. at 77 deg F.
Theoretical Coverage per Mixed Gallon	Min. 288 Sq. Ft. at 5 mils
Pot Life	Min. 2 hrs at 75 deg F.
Drying Time to Touch	Max 24 hrs at 75 deg F.
Application Methods	Brush, roller or spray
Environmental Code	Conforms to all present codes

2.1.2 Thinner

Thinner shall be as recommended by the paint manufacturer.

2.1.3 Equipment

Spray equipment shall be equipped with traps, separators, mechanical agitators, pressure gages and regulators, and screens or filters. Air caps, nozzles, and needles shall be as recommended by the spray equipment manufacturer for the type of paint materials to be applied.

2.1.4 Lead

Paints containing lead in excess of 0.06 percent by weight of the total nonvolatile content (calculated as lead metal) shall not be used.

2.1.5 Chromium

Paints containing zinc chromate or strontium chromate pigments shall not be used.

2.1.6 Volatile Organic Compound (VOC) Content

Paints shall comply with applicable state and local laws enacted to insure compliance with Federal Clean Air Standards and shall conform to the restrictions of the local air pollution control authority.

PART 3 EXECUTION

3.1 PROTECTION OF AREAS NOT TO BE PAINTED

Items not to be painted, including, but not limited to, the concrete substructure and deck, which are in contact with or adjacent to painted surfaces shall be protected prior to surface preparation and painting operations. Surfaces contaminated by coating materials shall be restored to original condition.

3.2 SURFACE PREPARATION

New steel angles for new downspout supports and new structural steel members for ladder modifications and access walkway repairs shall be shop cleaned in accordance with SSPC SP 6. All other areas to be painted shall be field cleaned in accordance with SSPC SP 6. Surfaces to be painted shall be clean and free of foreign matter before application of paint or surface treatments. Any flash rusting prior to painting of newly cleaned steel shall be cleaned according to SSPC SP 6.

3.3 MIXING AND THINNING

When thinning is approved as necessary to suit surface, temperature, weather conditions, or application methods, paints may be thinned in accordance with the manufacturer's directions. Two-component systems shall be mixed in accordance with the manufacturer's instructions. Any thinning of the first coat to ensure proper penetration and sealing shall be as recommended by the manufacturer. Paints of different manufacturers shall not be mixed.

3.4 APPLICATION

Painting practices shall comply with applicable state and local laws enacted to insure compliance with Federal Clean Air Standards. Unless otherwise specified or recommended by the paint manufacturer, paint may be applied by brush, roller, or spray. At the time of application, paint shall show no signs of deterioration. Each coat of paint shall be applied so dry film shall be of uniform thickness and free from runs, drops, ridges, waves, pinholes or other voids, laps, brush marks, and variations in color, texture, and finish. Special attention shall be given to insure that all edges, corners, crevices, welds, and rivets receive a film thickness equal to that of adjacent painted surfaces. Paints shall be applied only to surfaces that are completely free of moisture as determined by sight or touch.

3.4.1 Ventilation

Affected areas shall be ventilated during paint application so that workers exposure to chemical substances shall not exceed limits as established by

ACGIH-02, or as required by a more stringent applicable regulation.

3.4.2 Respirators

Operators and personnel in the vicinity of operating paint sprayers shall wear respirators.

3.4.3 Timing

Surfaces that have been cleaned as specified in paragraph SURFACE PREPARATION shall be given the first coat of paint on the same day the surface preparation has been completed. Sufficient time shall elapse between successive coats to permit proper drying. This period shall be modified as necessary to suit weather conditions. Manufacturer's instructions for application, curing and drying time between coats of two-component systems shall be followed.

3.5 Coverage and Film Thickness

The actual surface area covered per gallon of paint shall not exceed the prescribed coverage rate. A minimum of two coats shall be applied separately. All new steel angles, new structural steel members, weld removal areas, existing steel removed and reinstalled, new weld areas, and any painted surfaces damaged by fastener removal, hole drilling or welding shall receive a first coat of sufficient thickness to produce a minimum dry thickness of 5 mils. All surfaces shall receive a second coat to produce an additional minimum dry thickness of 5 mils. Total dry film thickness of new paint coating shall be 10 mils on all areas from which lead-based paint operations were performed. The time schedule for application of each coat shall be as specified in paragraph Timing. Thickness measurements shall be made by the Contractor on a daily basis at the locations selected by the Contracting Officer with one of the thickness gages listed below. All thickness measurements shall be recorded on the daily Contractor Construction Quality control Reports required under Section 01400 CONTRACTOR QUALITY CONTROL.

Product Name	Manufacturer
General Electric, Type B	General Electric Co.
Mikrotest	Electrophysik-Koln
Elcometer	Elcometer Instruments, Ltd.
Inspector Gage	Elcometer Instruments, Ltd.
Minitector, Type G	Elcometer Instruments, Ltd.

The gage selected shall be calibrated on metal similar in composition, surface texture, and thickness to the metal being coated, except that for metal thicker than 1/4 inch, the instrument may be calibrated on metal with a minimum thickness of 1/4 inch. When calibrating the gage for making film measurements in excess of 3 mils, the calibrating thickness standards (shims) shall be of nonmetallic composition. When only one thickness is specified, the calibrating shim thickness shall closely approximate the specified thickness. Calibrating instructions, thickness standards, and when applicable, a calibrating tool, shall be obtained from the manufacturer or supplier of the gage.

3.6 CLEANING

Cloths, cotton waste and other debris that might constitute a fire hazard shall be placed in closed metal containers and removed at the end of each

day. Upon completion of the work, staging, scaffolding, and containers shall be removed from the site or destroyed in an approved manner. Paint and other deposits on adjacent surfaces shall be removed and the entire job left clean and acceptable.

3.7 PAINT DAMAGE TO VEHICLES

The Contractor shall be responsible for any paint damage to vehicles crossing the bridge, crossing under the bridge and property adjacent or below the bridge resulting from his operations, and all complaints shall be promptly resolved.

3.8 MEASUREMENT AND PAYMENT

No separate measurement or payment will be made for the work specified in this section and all costs in connection therewith shall be included in the contract lump sum prices of the items of work to which the painting is incidental.

-- End of Section --

THIS PAGE HAS BEEN LEFT INTENTIONALLY BLANK