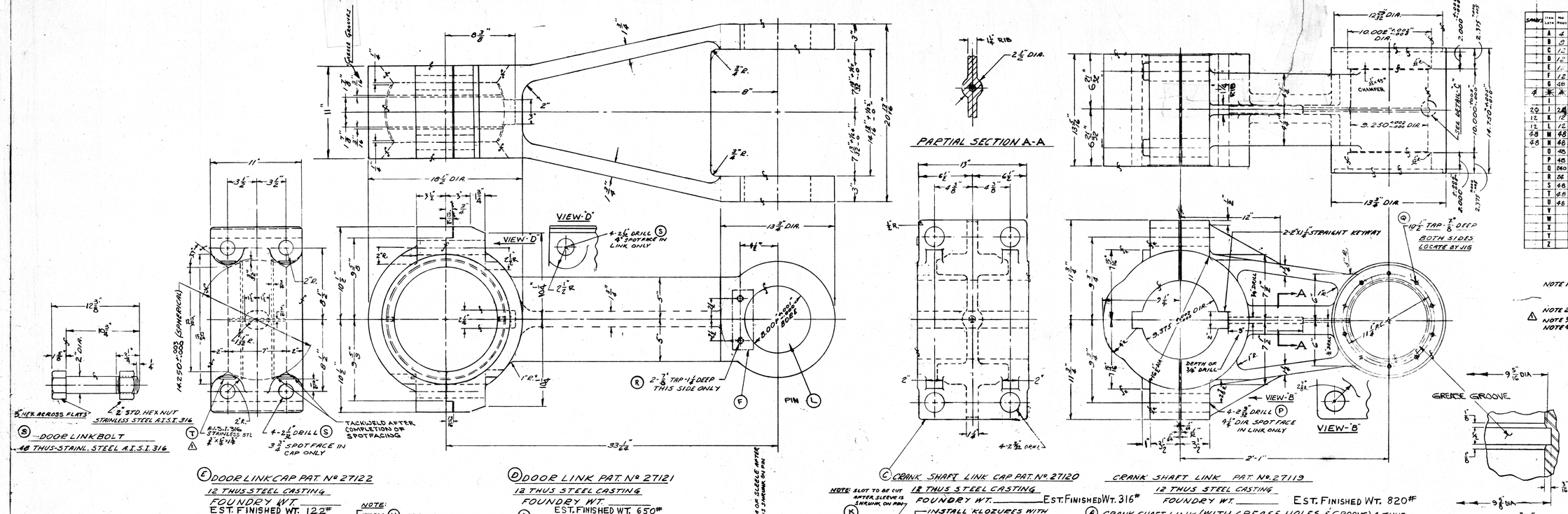

(E) DOOR LINK CAP PAT. Nº 27122
12 THUS STEEL CASTING
FOUNDRY WT. _____
EST. FINISHED WT. 122#

(D) DOOR LINK PAT. Nº 27121
12 THUS STEEL CASTING
FOUNDRY WT. _____
EST. FINISHED WT. 650#

(C) CRANK SHAFT LINK CAP PAT. Nº 27120
12 THUS STEEL CASTING
FOUNDRY WT. _____ EST. FINISHED WT. 316#

CRANK SHAFT LINK PAT. Nº 27113
12 THUS STEEL CASTING
FOUNDRY WT. _____ EST. FINISHED WT. 820#

(A) CRANK SHAFT LINK (WITH GREASE HOLES & GROOVE) 4 THUS
(B) CRANK SHAFT LINK (WITHOUT GREASE HOLES OR GROOVE) 8 THUS

NOTE: ITEM (H) ARE FOR INSTALLATION IN ITEM (A)
ITEM (J) 8 ARE FOR INSTALLATION IN ITEM (B) AND 12 ARE FOR INSTALLATION IN IN PIVOT BRG SHOWN ON DWG. "48551

NOTE: SLOT TO BE CUT AFTER SLEEVE IS SHRUNK ON PIN

INSTALL KLOZURES WITH LIPS POINTING OUT.

NOTE: 24 OF EACH OF THESE KLOZURES, ITEM (M) & (N) ARE FOR INSTALLATION IN PIVOT BEARING SHOWN ON DWG "48551

(M) GARLOCK Nº 6GX3921 WITH 7/16 SPACERS ATTACHED
(N) GARLOCK Nº 6GX3921

(F) DOOR LINK LOCK PLATE
2 @ THUS-STAINL. STEEL A.I.S.I. 316

(U) 2 1/4" STD. HEX NUT STAINLESS STEEL A.I.S.I. 316

3 1/2" HEX ACROSS FLATS

(P) CRANK SHAFT LINK BOLT
4 @ THUS-SAE #340

1" X 45° CHAMFER EACH END

2-1 7/8 DIA HOLES 180° APART

(H) BUSHING-CARBON FILLED TEFLON
(J) BUSHING (WITHOUT HOLES) 20 THUS

(L) PIN 12 THUS
CRANK SHAFT LINK PIN 1" STEEL

20 RMS FINISH

5/8" X 45° CHAMFER BOTH ENDS

(K) SLEEVE
12 THUS MONEL CASTING

(O) KLOZURE CARRIER
48 THUS-316 STAINL STEEL

NOTE: 24 OF THESE ARE FOR INSTALLATION IN PIVOT BEARING SHOWN ON DWG. "48551

10-3/8" DRILL THRU & C'SINK 82° X 1" DIA LOCATE BY JIG

(G) COVER PLATE
48 THUS-STAINL. STEEL TYPE 316

NOTE: 24 OF THESE ARE FOR INSTALLATION IN PIVOT BEARING SHOWN ON DRAWING "48551

BILL OF MATERIAL

SYMBOL	ITEM LETTER	NO. REQD.	NAME	PATT. NO.	MATERIAL
	A	4	CRANK SHAFT LINK	27113	(G) STEEL CASTG.
	B	8	CRANK SHAFT LINK	27113	(G) STEEL CASTG.
	C	1	CRANK SHAFT LINK CAP	27120	(G) STEEL CASTG.
	D	12	DOOR LINK	27121	(G) STEEL CASTG.
	E	1	DOOR LINK CAP	27122	(G) STEEL CASTG.
	F	12	BAR 2 1/2" X 1/2" X 7' LG.		F-16 STAIN. STL. 316
	G	48	COVER PLATE		(K) STAIN. ST'L 316
4	*	*	BUSHING CARBON FILLED TEFLON		(Q) SEE NOTE #3
	I				
20	J	28	BUSHING CARBON FILLED TEFLON		(Q) SEE NOTE #3
12	K	12	SLEEVE - MONEL CASTING		(P) MONEL S-500 OR EQUAL
12	L	12	LINK PIN, 7 1/8 DIA BAR x 22 3/4 LG.		F-5 STEEL
48	M	48	GARLOCK KLOZURE 6GX3921 (WITH 7/16 THK SPACERS ATTACHED)		(Q) ———
48	N	48	GARLOCK KLOZURE 6GX3921		(Q) ———
	O	48	KLOZURE CARRIER		(P) STAIN. ST'L 316
	P	48	1 1/2" OCT. HX. HD. (SEE DETAIL)		K-Q S.A.E. 9340
	Q	240	7/16" FL. HD. HEX. CAPSCREW 1" LG.		K-2 S.A.E. 5/16
	R	24	7/16" CAPSCREW HEX HD x 1 1/2" LG		K-2 STAIN. ST'L 316
	S	48	2" BOLT, HEX HD & NUT (SEE DETAIL)		K-2 STAIN. ST'L 316
	T	48	BAR, 3/4 x 1/8 x 1 3/4" LG.		F-16 STAIN. STL.
	U	48	2 1/4" STD. HEX NUT (HEAVY SERIES)		K-2 STAIN. ST'L 316
	V				
	W				
	X				
	Y				
	Z				

NOTE 1-ITEMS (A) THRU (E) TO BE STEEL CASTING IN ACCORDANCE WITH FEDERAL SPECIFICATION GG-S-681a CLASS 65-35 ANNEALED.
NOTE 2-ITEMS (C) (D) (O) (P) (R) (S) (T) & (U) STAINLESS STL. T/P 316
NOTE 3-CARBON FILLED TEFLON: GARLOCK "8538
NOTE 4-ALL OTHER MATERIALS UNLESS NOTED TO BE STANDARD COMMERCIAL QUALITY.

BETHLEHEM STEEL CORPORATION
SPARROWS POINT, MARYLAND
HULL NO. 4608

HULL NO 333
SEAGOING HOPPER AND BOOM TYPE DREDGE — McFARLAND
U.S. ARMY ENGINEER DISTRICT
PHILADELPHIA
CORPS OF ENGINEERS
MARINE DESIGN DIVISION
PHILADELPHIA, PA.

MADE FROM
CONTRACT NO. 30250-1
ELLICOTT MACHINE CORPORATION
BALTIMORE, MD.

HOPPER DOOR OPERATING DETAILS. SHEET Nº 2

9-7-1104

CHG. NO.	ALT. NO.	DESCRIPTION	DATE	BY	CHKD
324	△	REMOVED ALL GREASE GROOVES & CHG THE NO. OF GREASE HOLES ITEM G TO 2 IN THE 4 CRESCENT FILLED TEFLON BUSHINGS ITEM H; ADD 8 UNWRITTEN ITEM I, ALSO INCREASED QUAN. OF ITEM J FROM 12 TO 20. CHGD MATL. THE LOCKING PARTS ITEM T FROM CARB. STL. TO STAIN. STL. 316. REVISED NOTE NO. 2. TO INCLUDE ITEMS S, T & U. ITEM P MADE SAE 4340 STEEL.	8-19-65	P.M.	G.R.K.

PARTS BOOK
STANDARD MANUFACTURING TOLERANCES UNLESS OTHERWISE SPECIFIED
MACHINED SURFACES ± .015" SHEARED OR BURNED SURFACES ± 1/32"

TRACED BY J.B.
CHECKED BY -
CHIEF ENGINEER

APPROVED C.R.K.
APPROVED -
SCALE 3"=1'-0"
DATE 8/4

DRG. No. 48548