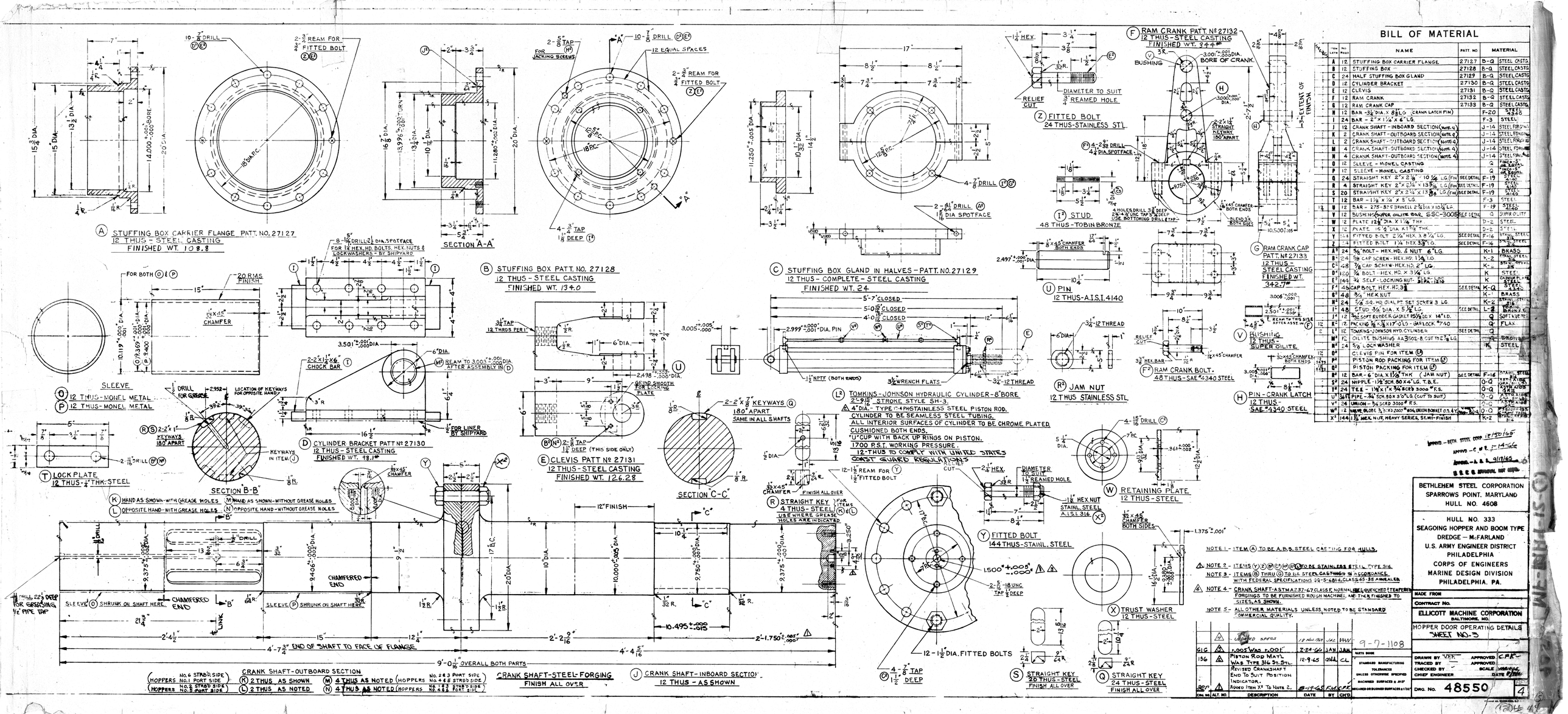

BILL OF MATERIAL

ITEM LETR	NO. REQD	NAME	PATT. NO.	MATERIAL
A	12	STUFFING BOX CARRIER FLANGE	27127	B-Q STEEL CASTG
B	12	STUFFING BOX	27128	B-Q STEEL CASTG
C	24	HALF STUFFING BOX GLAND	27129	B-Q STEEL CASTG
D	12	CYLINDER BRACKET	27130	B-Q STEEL CASTG
E	12	CLEVIS	27131	B-Q STEEL CASTG
F	12	RAM CRANK	27132	B-Q STEEL CASTG
G	12	RAM CRANK CAP	27133	B-Q STEEL CASTG
H	12	BAR - 3/4" DIA. X 8 1/2" LG. (CRANK LATCH PIN)		F-20 STEEL 4340
I	24	BAR - 2" X 1 1/4" X 6" LG.		F-3 STEEL
J	12	CRANK SHAFT - INBOARD SECTION (NOTE 4)		J-14 STEEL FORGING
K	2	CRANK SHAFT - OUTBOARD SECTION (NOTE 4)		J-14 STEEL FORGING
L	2	CRANK SHAFT - OUTBOARD SECTION (NOTE 4)		J-14 STEEL FORGING
M	4	CRANK SHAFT - OUTBOARD SECTION (NOTE 4)		J-14 STEEL FORGING
N	4	CRANK SHAFT - OUTBOARD SECTION (NOTE 4)		J-14 STEEL FORGING
O	12	SLEEVE - MONEL CASTING		Q MONEL METAL
P	12	SLEEVE - MONEL CASTING		Q MONEL METAL
Q	24	STRAIGHT KEY 2" X 2 1/2" X 10 1/2" LG. (FIN)	SEE DETAIL	F-19 STEEL 4140
R	4	STRAIGHT KEY 2" X 2 1/2" X 13 3/16" LG. (FIN)	SEE DETAIL	F-19 STEEL 4140
S	20	STRAIGHT KEY 2" X 2 1/2" X 13 3/16" LG. (FIN)	SEE DETAIL	F-19 STEEL 4140
T	12	BAR - 1 1/2" X 1/4" X 5" LG.		F-3 STEEL
U	12	BAR - 2.75 - 3.25 BRINELL 2 3/4" DIA. X 10 1/2" LG.		F-19 STEEL 4140
V	12	BUSHING SUPER OILITE BAR SSC-3005	SEE DETAIL	Q SUPER OILITE
W	12	PLATE 12 3/4" DIA. X 1/4" THK.		D-2 STEEL
X	12	PLATE 16 1/4" DIA. X 1 3/4" THK.		D-2 STEEL
Y	144	FITTED BOLT 2 1/4" HEX. X 8 1/4" LG.	SEE DETAIL	F-16 STAINL. STEEL
Z	24	FITTED BOLT 1 1/4" HEX. X 3 3/4" LG.	SEE DETAIL	F-16 STAINL. STEEL
A²	24	5/8" BOLT - HEX. HD. & NUT 6" LG.		K-1 BRASS
B²	24	5/8" CAP SCREW - HEX. HD. 1 1/4" LG.		K-2 STAINL. STEEL
C²	48	1/8" CAP SCREW - HEX. HD. 2" LG.		K-2 316 STAINL. STEEL
D²	120	3/4" BOLT - HEX. HD. 2" X 3 1/4" LG.		K STEEL
E²	144	3/4" SELF - LOCKING NUT - 5/16" X 1210		K CARBON STEEL
F²	48	CAP BOLT, HEX. HD. 3 1/2"	SEE DETAIL	K-Q STEEL 4340
G²	48	3/4" HEX. NUT		K-1 BRASS
H²	24	1/8" SQ. HD. & FLAT SET SCREW 3" LG.		K-2 STAINL. STEEL 316
I²	48	STUD 3/4" DIA. X 5 1/2" LG.	SEE DETAIL	L-2 STAINL. STEEL 316
J²	12	3/32" SOFT RUBBER GASKET 15 1/2" OD X 14" I.D.		Q SOFT VULCOTEX
12 K²	12	PACKING 3/8" X 3/8" X 17" O.D. - SAFLOCK #740		Q FLAX
C	12	TOMKINS-JOHNSON HYD. CYLINDER	SEE DETAIL	Q
M²	12	OILITE BUSHING AA 3502-8 CUT TO 2 7/8" LG.		K BRONZE
N²	24	5/8" LOCK WASHER		K STEEL
12 O²		CLEVIS PIN FOR ITEM (L)		
P²		PISTON ROD PACKING FOR ITEM (L)		
12 Q²		PISTON PACKING FOR ITEM (L)		
R²	12	BAR - 6" DIA. X 1 1/2" THK. (JAM NUT)	SEE DETAIL	F-16 STAINL. STEEL
S²	24	NIPPLE - 1 1/4" SCH. 80 X 4" LG. T.B.E.		O-Q CARBON STEEL
T²	24	TEE - 1 1/4" X 1 1/4" X 3/4" SCRD 3000 # F.S.		O-Q CARBON STEEL
U²	24	PIPE - 3/4" SCH. 80 X 3" O.L. (CUT TO SUIT)		O-Q CARBON STEEL
V²	24	UNION - 3/4" SCRD 3000 # F.S.		O-Q CARBON STEEL
W²	12	VALVE, GLOBE 3/4" X 4" 2000 # 304 UNION BONNET 0.S.&Y.	VENN-SLOAN 304	O-Q CARBON STEEL
X²	144	1 1/2" HEX. NUT, HEAVY SERIES, SEMI-FINISH		K-2 STAINL. STEEL 316

APPROVED - BETH STEEL CORP. 12/30/65
APPROVED - C.F.R. 1-14-66
APPROVED - A.B.S. 9/17/65
B.E.C.O. OFFICIAL NOT REQ'D.

BETHLEHEM STEEL CORPORATION
SPARROWS POINT, MARYLAND
HULL NO. 4608

HULL NO. 333
SEAGOING HOPPER AND BOOM TYPE
DREDGE — McFARLAND
U.S. ARMY ENGINEER DISTRICT
PHILADELPHIA
CORPS OF ENGINEERS
MARINE DESIGN DIVISION
PHILADELPHIA, PA.

MADE FROM
CONTRACT NO.
ELLICOTT MACHINE CORPORATION
BALTIMORE, MD.
HOPPER DOOR OPERATING DETAILS
SHEET NO. 3

Chg. No.	Alt. No.	Description	Date	By	Ch'd
		Changed Specs	12-30-65	JAC	FHV
616		±.005" was ±.001"	7-24-66	JAN	JAM
196		Piston Rod Nut was Type 316 St. Stl.	12-9-65	CMH	CL
80		Revised Crankshaft End To Suit Position Indicator. Added Item X² To Note 2.	8-19-65	FHV	CFR

9-7-1108

MATE DOOR
STANDARD MANUFACTURING TOLERANCES UNLESS OTHERWISE SPECIFIED
MACHINED SURFACES ± 1/32"
FORGED OR BURNED SURFACES ± 1/16"

DRAWN BY V.E.R. — APPROVED C.F.R.
TRACED BY — APPROVED
CHECKED BY — SCALE
CHIEF ENGINEER — DATE
DRG. NO. 48550 — SHT. 4

NOTE 1 - ITEM (A) TO BE A.B.S. STEEL CASTING FOR HULLS.

NOTE 2 - ITEMS (Y)(Z)(B²)(C²)(H²)(R²) TO BE STAINLESS STEEL TYPE 316.

NOTE 3 - ITEMS (B) THRU (G) TO BE STEEL CASTINGS IN ACCORDANCE WITH FEDERAL SPECIFICATIONS 22-S-681d, CLASS 65-35 ANNEALED.

NOTE 4 - CRANK SHAFT - ASTM A 237-67 CLASS E, NORMALIZED, QUENCHED & TEMPERED FORGINGS TO BE FURNISHED ROUGH MACHINED, AND THEN FINISHED TO SIZES AS SHOWN.

NOTE 5 - ALL OTHER MATERIALS UNLESS NOTED TO BE STANDARD COMMERCIAL QUALITY.