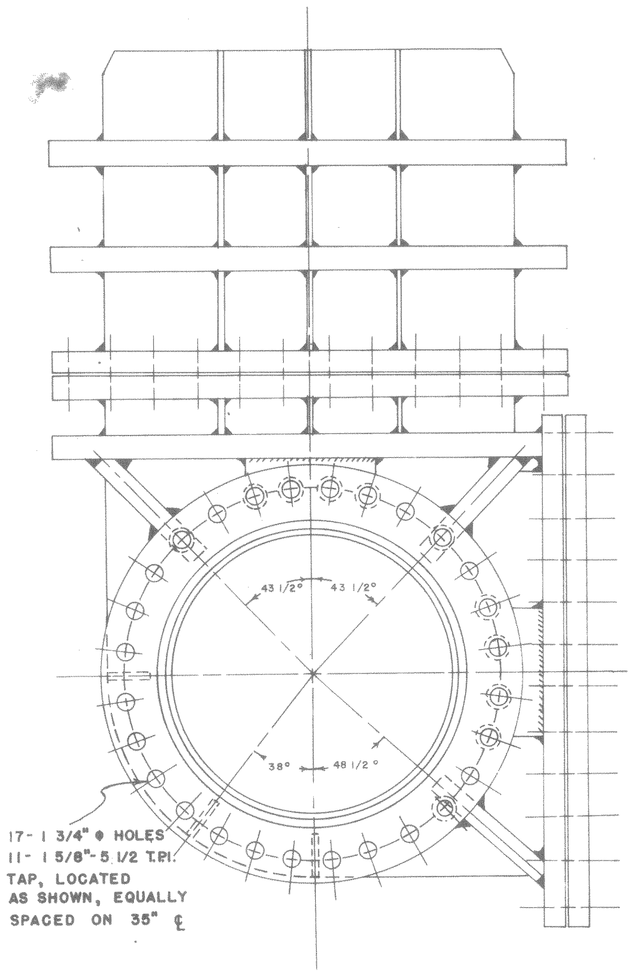

17- 1 3/4" ϕ HOLES
11- 1 5/8"-5 1/2 T.P.I.
TAP, LOCATED
AS SHOWN, EQUALLY
SPACED ON 38" ℄

△3 SUPPLEMENTARY DRAWING FOR
BODY STIFFENERS AND BODY FLANGE
DRILLING FOR ITEM #2 26"-FIG. 92 M
DREDGE VALVE. SCALE 1/8" - 1"

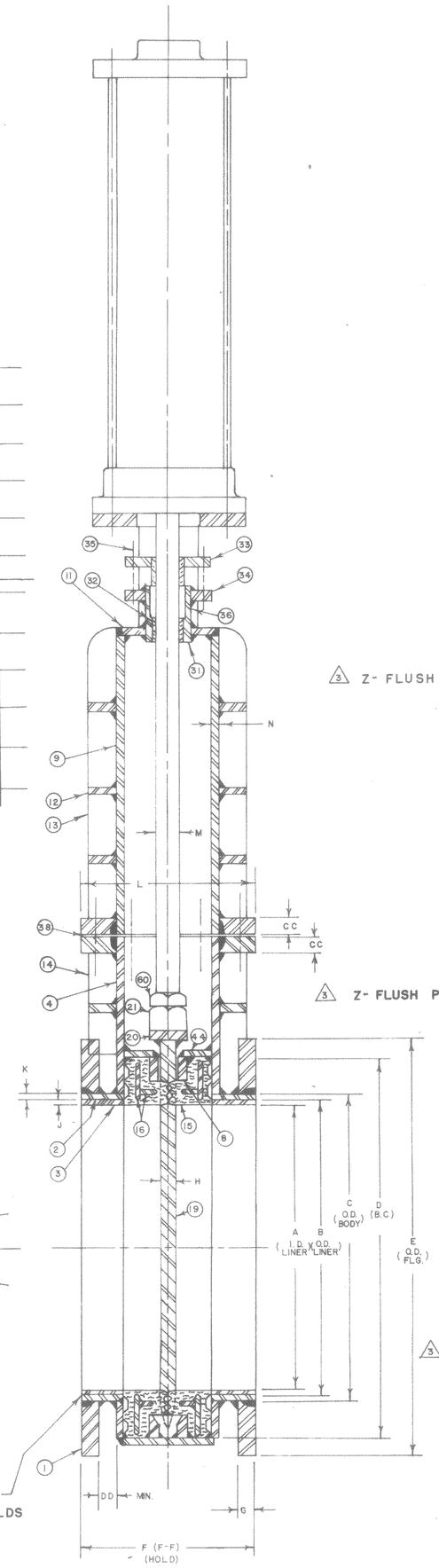

△3 Z- FLUSH PORT

△3 Z- FLUSH PORT

△3 Z- FLUSH PORT

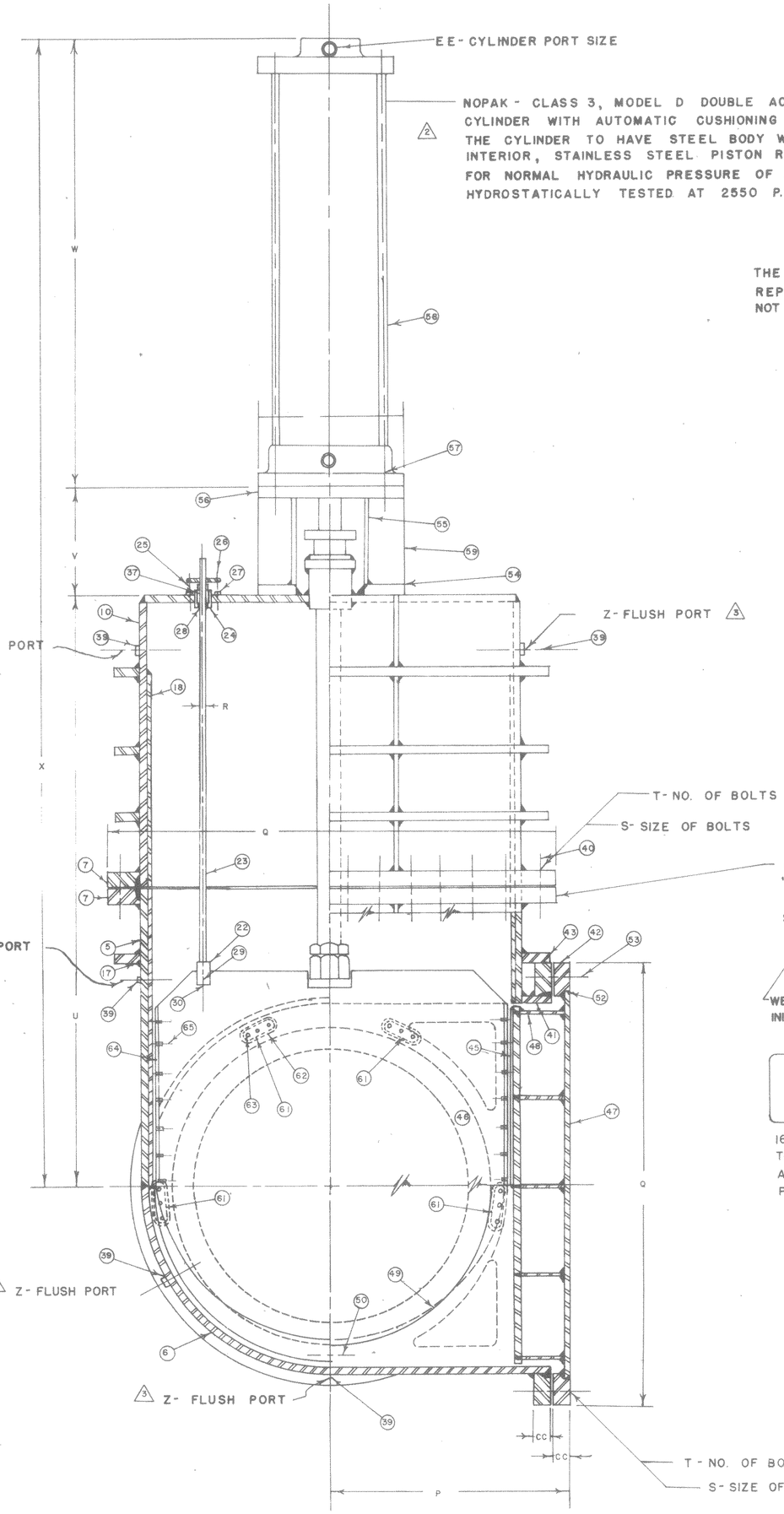

EE- CYLINDER PORT SIZE

△2 NOPAK - CLASS 3, MODEL D DOUBLE ACTING HYDRAULIC CYLINDER WITH AUTOMATIC CUSHIONING AT BOTH ENDS. THE CYLINDER TO HAVE STEEL BODY WITH CHROME PLATED INTERIOR, STAINLESS STEEL PISTON ROD AND BE SUITABLE FOR NORMAL HYDRAULIC PRESSURE OF 1500 P.S.I.G. HYDROSTATICALLY TESTED AT 2550 P.S.I.G.

THE VALVE SHOWN ON THIS DRAWING IS THE ACTUAL REPRESENTATION OF A CERTAIN SIZE VALVE, BUT DOES NOT NECESSARILY REPRESENT ALL SIZES IN ALL DETAIL

△3 Z- FLUSH PORT

T- NO. OF BOLTS

S- SIZE OF BOLTS

CHEST FLANGE TO BE STAMPED:
"MFG. BY ALBINA ENGINE & MACHINE WKS.
PORTLAND, ORE.
STEEL A-285 WP WATER"

WELDER'S INITIAS — USCG STAMP — USCG INSPECTOR'S INITIALS

130 OR 230 AS APPLICABLE

STEM: 18-8	DISC: 18-8
SEAT: NEOP.	SIZE: ____

16 GA. STAINLESS STEEL TAG TO BE FASTENED TO FLANGE ACCORDANCE W/M.S.S. SP-25 PARA. 12.2

SECTION CODE

- STEEL
- STAINLESS STEEL
- BRONZE
- NEOPRENE

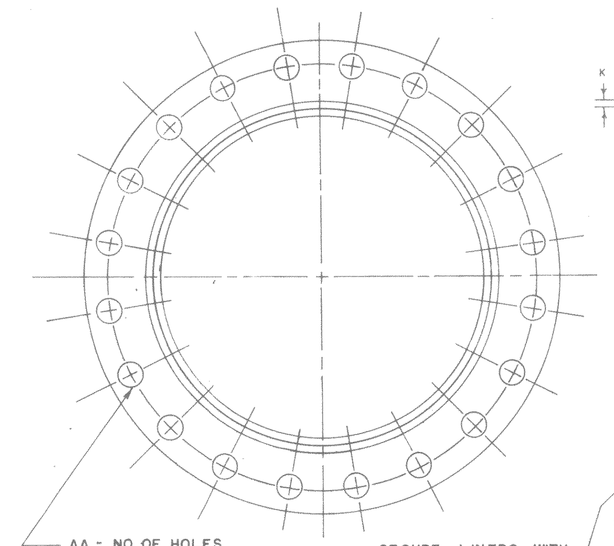

AA - NO. OF HOLES
BB - SIZE OF HOLES (DIA.)
(HOLES STRADDLE ℄ & EQUALLY SPACED)

SECURE LINERS WITH 4- 1/2" DIA. PLUG WELDS

△4 △5 NOTE THAT 11 BODY FLANGE MOUNTING HOLES ON 26" VALVE ARE TAPPED 1 5/8"-5 1/2 N.C. & 17 HOLES ARE DRILLED 1 3/4" ϕ

ASTM NO.	PART NO.	NAME OF PART	NO. REQ'D	MATERIAL
A-216 WCA	1	BODY FLANGE	2	STEEL
A-285 GR. C	2	BODY END	2	STEEL
	3	BODY LINER	2	T-304 S.S.
A-285 GR. C	4	CHEST END PL.	2	STEEL
A-285 GR. C	5	CHEST SIDE PL.	1-1	STEEL
A-285 GR. C	6	BODY WRAPPER	1	STEEL
A-216 WCA	7	BONNET FLANGES	2	STEEL
A-285 GR. C	8	RETAINING BAR	2	STEEL
A-285 GR. C	9	BONNET END	2	STEEL
A-285 GR. C	10	BONNET SIDE	2	STEEL
A-285 GR. C	11	BONNET COVER	1	STEEL
A-216 WCA	12	BONNET STIFF-HORIZ	AS REQ'D	STEEL
A-216 GR. C	13	BONNET STIFF-VERT.	AS REQ'D	STEEL
A-285 GR. C	14	CHEST STIFF	AS REQ'D	STEEL
	15	SEAT RING	2	WAX NEOPRENE #N-202 60 DOROMETER
	16	SEAT REINF. RING	2	STEEL
A-240	17	CHEST GUIDE	1-1	T-304 S.S.
A-240	18	BONNET GUIDE	2	T-304 S.S.
A-240	19	GATE	1	T-304 S.S.
A-240	20	GATE PAD	1	T-304 S.S.
A-276	21	GATE NUT	1	T-304 S.S.
A-240	22	INDICATOR CLEVIS	2-1	T-304 S.S.
A-276	23	INDICATOR ROD	1	T-304 S.S.
A-276	24	IND. STUFF. BOX	1	T-304 S.S.
A-216 WCA	25	IND. GLAND	1	STEEL
A-240	26	IND. GLAND STUDS	2	18-8 S.S.
A-216 WCA	27	IND. STUD BASE	2	STEEL
	28	IND. STUFF. BOX BUSH.	1	BRONZE
	29	IND. CLEVIS BOLT	1	18-8 S.S.
	30	NUT & COTTER	1-1	STEEL
	31	OPER. ROD STUFF. BOX	1-1	STEEL
	32	BONNET BUSHING	1	BRONZE
A-285, A-107	33	GLAND	1-1	STEEL
A-285	34	STUFF. BOX FLG.	1	STEEL
A-240	35	GLAND STUDS	2	18-8 S.S.
	36	OPER. ROD PACKING	6	ASBESTOS
	37	INDICATOR PACKING	5	ASBESTOS
	38	BONNET GASKET	2	RUBBER
	39	FLUSH PORTS	5	T-304 S.S.
A-307	40	BONNET BOLTS		GALV. STEEL
A-285 GR. C	41	ACCESS TOP PL.	1	STEEL
A-216 WCA	42	ACCESS FLANGE	1	STEEL
A-216 WCA	43	INSERT FLANGE	1	STEEL
A-285 GR. C	44	RETAINING BAR BRKT	2	STEEL
A-240	45	INSERT GUIDE	1	T-304 S.S.
A-285 GR. C	46	INSERT INNER PL.	1	STEEL
A-285 GR. C	47	INSERT OUTER PL.	1	STEEL
A-285 GR. C	48	INSERT PL. BRACKET	2-2-3	STEEL
A-285 GR. C	49	INSERT SEAT RETAINER	2	STEEL
A-276	50	DOWEL PINS	4	T-304
	51			
	52	ACCESS GASKET	2	RUBBER
A-307	53	INSERT BOLTS		GALV. STL.
A-285 GR. C	54	YOKE BASE	2	STEEL
A-285 GR. C	55	YOKE LEG	2	STEEL
A-285 GR. C	56	CYL. MOUNT PL.	1	STEEL
A-307	57	CYL. BOLTS	4	GALV. STL.
	58	CYLINDER	1	NOPAK, OR EQ.
A-285 GR. C	59	YOKE STIFF.	2	STEEL
A-276	60	LOCK NUT	1	T-304 S.S.
	61	GATE GUIDE	8	BRONZE
A-285 GR. C	61	GATE GUIDE RETAINER	8	STEEL
	63	GATE GUIDE SCREWS	24	T-304
	64	WEAR STRIP	2	BRONZE
	65	WEAR STRIP SCREWS	AS REQ'D	T-304

NOTE:

1. ALL INTERIOR STEEL SURFACES EXCEPT BODY LINERS TO BE NEOPRENE COATED, 1/16" MIN. TH., GACO N-200 OR, EQ.
2. △4 ALL T-304 MATERIAL SHALL BE IN ACCORDANCE WITH FEDERAL SPECIFICATION QQ-S-766C AND/OR QQ-S-763c, CLASS 304.
3. CYLINDERS SIZED TO OPERATE VALVE AT 25 P.S.I. LINE PRESSURE WITH 1125 P.S.I. OIL CYLINDER PRESSURE MINIMUM.
4. CYLINDERS TO BE "NOPAK" CLASS 3 AS MANUFACTURED BY GALLAND HENNING, MILWAUKEE, WISCONSIN, OR EQUAL. 1500 P.S.I. USCG APPROVED.
5. ALL BODY WELDS TO BE CHIPPED TO CLEAN WELD METAL & REWELDED.
6. ALL WELDS & WELDERS TO MEET REQUIREMENTS OF USCG MARINE ENGINEERING REGULATIONS CG-115, SUBCHAPTER F, PART 57.

△5 7, 8, 9 — DELETED

NOTE: EACH VALVE TO HAVE 5 FLUSH PORTS

SHIP: U.S. ARMY ENGINEER DREDGE "McFARLAND"

SERVICE: 34" VALVES- DREDGE PUMP SUCTION
26" VALVES- DREDGE PUMP SUCTION & DISCHARGE

ITEM NO.	SIZE	WORKING PRESSURE	A	B	C	D	E	F	G	H	J	K	L	M	N	P	Q	R	S	T	U	V	W	X	Y	Z	OPERATOR	△2 GATE & SEAT TEST PRESSURE	BODY & BONNET TEST PRESSURE	NO. VALVES REQ'D	△2 AA	BB	CC	DD	EE	△2 ESTIMATED WEIGHT	FINISHED ASSEMBLED WEIGHT	GROSS SHIPPING WEIGHT
1	34	130 P.S.I.	34	35	36 1/4	42 3/4	46	20	2	1 3/4	1/2	5/8	19	2 1/2	3/4	30 3/8	53 1/2	3/4	1 1/4	34	70 3/4	12	50	132 3/4	11 1/4	3/4 N.P.	6" DIA. X 40 1/2" STROKE NOPAK MODEL "D" CLASS 3 CYLINDER W/ #3 ROD END & 14" EXTRA ROD LENGTH	130	260	2	32	1 5/8	1 3/4	2 1/2	1" N.P.	7500#		8050#
△1 2	26	230	26	27	28 1/2	35	39 3/8	20	2 1/4	1 3/4	1/2	3/4	25 1/2	2 1/2	1	25 5/8	48	3/4	1 1/2	30	58 3/8	11 3/4	42	112 1/8	11 1/4	3/4 N.P.	6" DIA. X 32 1/2" STROKE NOPAK MODEL "D" CLASS 3 CYLINDER W/ #3 ROD END & 14" EXTRA ROD LENGTH	250	460	12	28	1 5/8-5 1/2 / 1 3/4	2	2	1" N.P.	8000#		8890#
△1	20	130	20	21	22	29 1/2	32	18	1 11/16	1	1/2	1/2	16	2	1/2	21 7/8	38	3/4	1	26	47 1/8	13	33 1/8	93 1/4	9 3/4	3/4	5" DIA. X 26" STROKE NOPAK MODEL "D", CLASS 3 CYLINDER W/ #3 ROD END & 13 1/2" EXTRA ROD LENGTH	130	260	1	20	1 3/8	1 1/2	3	3/4	2800#		3285#

NO.	ALTERATIONS	BY	DATE
△5	DELETED ITEMS 7,8,9. CH'D. 1/64" TO 1/16"	HW	21 JUL. 1971
△4	UPDATED SPECS	HW	21 JUL. 1971
△3	26" VALVE WAS 28" TAPPED HOLES NOW 11-TAPPED 17-DRILLED. CALL OUT FLUSH PORTS-ADD SUPPLE-MENTARY DRAWING	JB	5/27/65
△2	ADDED NOPAK CL ASS "3" MODEL "D" DOUBLE ACTING, etc. 26" BODY FLANGE NOTE COLUME BB (26" SIZE) - 1 5/8"-5 1/2" WAS 1 5/8"-8 ADDED ESTIMATED, FINISHED & GROSS WT. ADDED & SEAT TO GATE TEST PRESS., GATE PRESS. (26") FOR TEST AT 230#	EJ	4/27/65
△1	26" VALVE 39 3/8" WAS 39 1/2", 1 5/8"-6 WAS 1 3/4", 20" F-F WAS 30", 25 1/2" WAS 21 1/2". ADD 20" VALVE SIZE & DIM.	EJ	4/1/65

BETH. HULL NO.	JOB NO.	APPROVALS BY	SUBMIT DATE	APPD DATE
4608		U.S. ARMY ENGRS		
		A.B.S.		
		U.S.C.G.		
		U.S.P.H.S.		

BETHLEHEM STEEL CORPORATION
SHIPBUILDING DIVISION
SPARROWS POINT, MD. 21219

U.S. ARMY ENGINEER DISTRICT, PHILADELPHIA
CORPS OF ENGINEERS
MARINE DESIGN DIVISION
PHILADELPHIA, PA.

DESIGN AGENT
ELLICOTT MACHINE CORPORATION
BALTIMORE, MARYLAND, U.S.A.

DRAWN BY
CHKD. BY
APPD. BY
BETH. STEEL CORP.
APPD. BY
ELLICOTT DWG. NO.
FABRI-VALVE DWG. NO. AA-281

HULL NO 333
SEAGOING HOPPER & BOOM TYPE DREDGE
"McFARLAND"

FIG. #92-M
MARINE KNIFE GATE VALVES
CRITICAL DIMENSIONS

SCALE
BETH. DWG. NO.
REV 5

#35