REVISIONS			
SYM.	DESCRIPTION	DATE	APPD.
1	REVISED PIPE SIZE	4-26-82	CC
2	Deleted Note on Steel Type	2-5-88	[illegible]

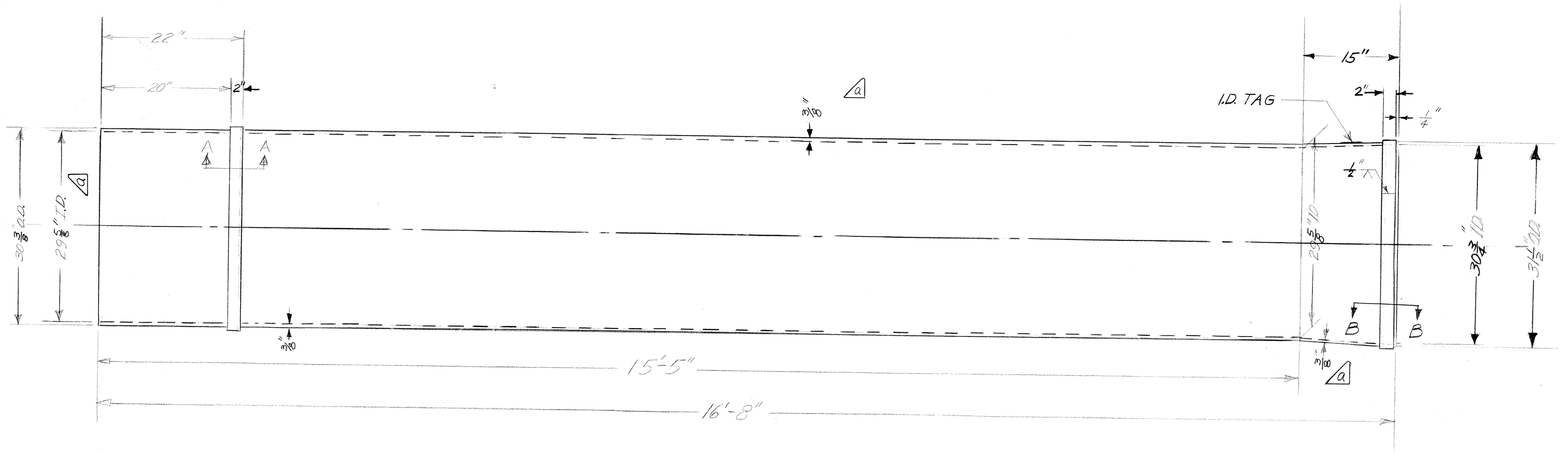

PIPE

SCALE - 1" = 1'-0"

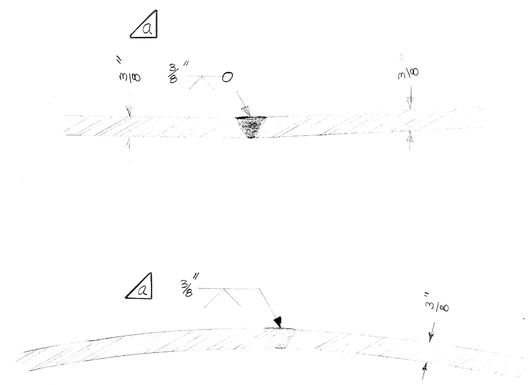

PIPE WELD DETAIL

SCALE - N.T.S.

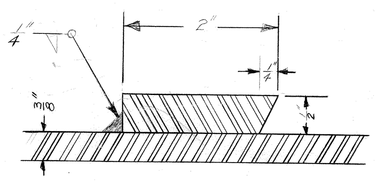

SECTION A-A

SCALE - FULL SIZE. SECTION B-B SIMILAR TO SECTION A-A.

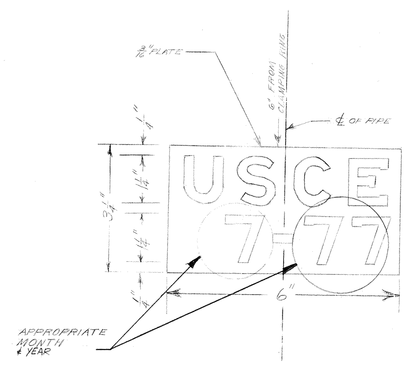

IDENTIFICATION TAG

SCALE - 6" = 1'-0"

NOTES

MALE ENDS - GRIND FLUSH OUTSIDE WELDED SURFACE FOR A DISTANCE OF 5" FROM END OF PIPE.

FEMALE ENDS - GRIND FLUSH WELD ON OUTSIDE SURFACE FOR A DISTANCE OF 15" FROM END OF PIPE.

WELD ALL AROUND

GROOVE BUTT WELD

FILLET WELD

~~STRAIGHT POLARITY ONLY~~

WELDING ELECTRODES SHALL CONFORM TO AWS DESIGNATION E-7018

DESIGNED BY:	DEPARTMENT OF THE ARMY Philadelphia District, Corps of Engineers Philadelphia, Pennsylvania
DRAWN BY: FMA	30" (NOMINAL) SURGE DISCHARGE
CHECKED BY:	
APPROVED BY: 5 JAN. 1977	
APPROVED FOR THE DISTRICT ENGINEER CORPS OF ENGINEERS, U.S.A. DATE: 22 DEC. 76	SIZE F · REFERENCE NO. · DRAWING NO. · REV. A SCALE: · PLANT BRANCH · SHEET