ERS

U. S. ARMY

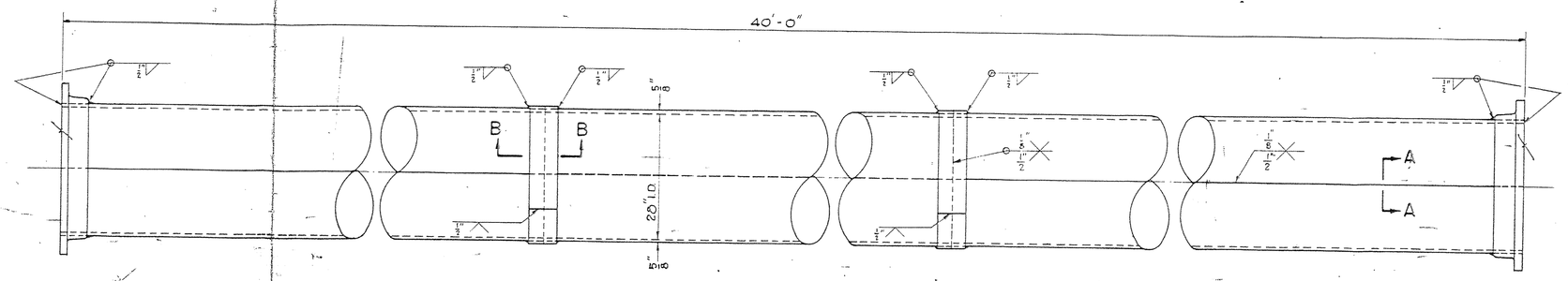

DISCHARGE PIPE

SCALE: $\frac{3}{4}$" = 1'-0"

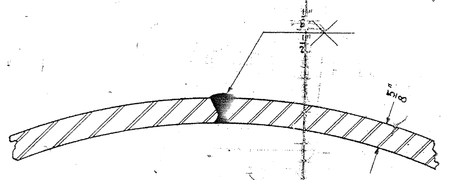

SECTION A-A

SCALE: 6" = 1'-0"

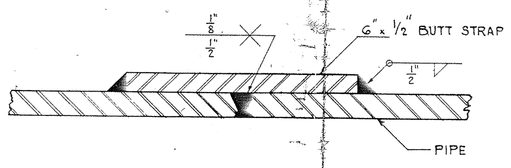

SECTION B-B

SCALE: 6" = 1'-0"

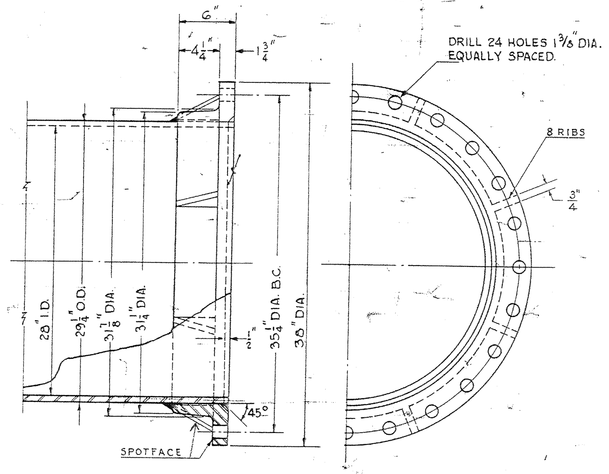

DETAIL OF FLANGE

SCALE: $1\frac{1}{2}$" = 1'-0"

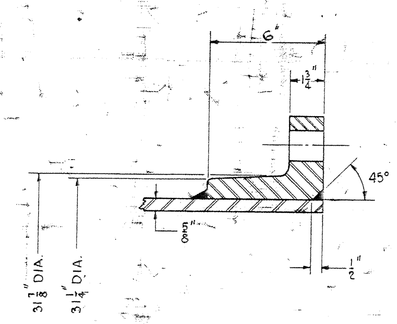

FLANGE CONNECTION

SCALE: 3" = 1'-0"

GENERAL NOTES

1 MATERIAL SPECIFICATIONS:
FLANGES: CAST STEEL, FEDERAL SPECIFICATIONS QQ-S-681F, GRADE A27, 65-35.
PIPE: STEEL PLATE AS SPECIFIED ON PURCHASE ORDER.
BUTT STRAPS: COMMERCIAL GRADE HOT-ROLLED MILD STEEL.

2 FACE OF FLANGES SHALL BE NORMAL TO AXIS OF PIPE.

3 HOLES IN FLANGES AT BOTH ENDS OF PIPE SECTION SHALL BE IN LINE.

4 FLANGES SHALL BE FACED, DRILLED AND SPOTFACED ON BACK BEFORE ATTACHING TO PIPE.

5 ENDS OF PIPE AND FLANGE WELD SHALL BE GROUND SMOOTH AND FLUSH WITH FACE OF FLANGE.

6 LONGITUDINAL AND CIRCUMFERENTIAL WELDS SHALL BE GROUND FLUSH IN WAY OF FLANGES AND BUTT STRAPS.

7 PIPE SECTIONS SHALL BE MADE UP OF 3 PLATES OF EQUAL LENGTH.

8 PIPE SECTIONS SHALL BE TESTED HYDROSTATICALLY AT 300 P.S.I.

9 ALL WELDS SHALL BE MADE BY MACHINE OR MANUAL ELECTRIC ARC WELDING PROCESS.

10 WELDING SYMBOLS:

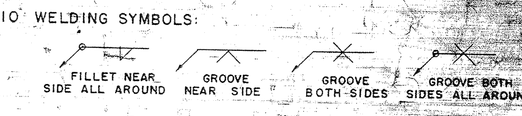

REVISION	DATE	DESCRIPTION	BY
A	25 OCT 58	UPDATED FLANGE MATERIAL SPECIFICATION	

CORPS OF ENGINEERS
U. S. ARMY
MARINE DIVISION, OFFICE OF THE DISTRICT ENGINEER
PHILADELPHIA, PA.

DRAWN BY H.J.F. H.L.D.
TRACED BY H.L.D.
CHECKED BY G.A.J.
G. A. Johnson
NAVAL ARCHITECT
SUBMITTED
Carl F. Ankener
CHIEF, DESIGN BRANCH
RECOMMENDED
W. H. Roberts
CHIEF, MARINE DIVISION

28" FLOATING DISCHARGE PIPE

APPROVED
J. Weinstock
FOR COL. C. E. DISTRICT ENGINEER
DATE
LT. COL. C.E. 26 APRIL 1954

SCALE: AS NOTED
DRAWING NUMBER
SHEET 1 OF 1

2-10-186 REV. A