SOLICITATION, OFFER AND AWARD

1. THIS CONTRACT IS A RATED ORDER UNDER DPAS (15 CFR 700)	RATING	PAGE OF PAGES 1 456		
2. CONTRACT NO.	3. SOLICITATION NO. DACW61-02-R-0035	4. TYPE OF SOLICITATION [ ] SEALED BID (IFB) [X] NEGOTIATED (RFP)	5. DATE ISSUED 18 Jul 2002	6. REQUISITION/PURCHASE NO. W25PHS-2144-8414

7. ISSUED BY CODE DACW61
US ARMY ENGINEER DISTRICT, PHILADELPHIA
CONTRACTING DIVISION
WANAMAKER BLDG, 100 PENN SQ EAST
PHILADELPHIA PA 19107-3390
TEL:
FAX:

8. ADDRESS OFFER TO (If other than Item 7) CODE
See Item 7
TEL:
FAX:

NOTE: In sealed bid solicitations "offer" and "offeror" mean "bid" and "bidder".

SOLICITATION

9. Sealed offers in original and 1 copies for furnishing the supplies or services in the Schedule will be received at the place specified in Item 8, or if handcarried, in the depository located in block 6 until 16 00 (Hour) local time 19 Aug 2002 (Date)

CAUTION - LATE Submissions, Modifications, and Withdrawals: See Section L, Provision No. 52.214-7 or 52.215-1. All offers are subject to all terms and conditions contained in this solicitation.

10. FOR INFORMATION CALL:	A. NAME	B. TELEPHONE (Include area code) *(NO COLLECT CALLS)*	C. E-MAIL ADDRESS
	LINDA M GRIFFITH	215-656-6774	linda.m.griffith@usace.army.mil

11. TABLE OF CONTENTS

(X)	SEC.	DESCRIPTION	PAGE(S)	(X)	SEC.	DESCRIPTION	PAGE(S)
		PART I - THE SCHEDULE				**PART II - CONTRACT CLAUSES**	
X	A	SOLICITATION/ CONTRACT FORM	1	X	I	CONTRACT CLAUSES	128
X	B	SUPPLIES OR SERVICES AND PRICES/ COSTS	4			**PART III - LIST OF DOCUMENTS, EXHIBITS AND OTHER ATTACHMENTS**	
X	C	DESCRIPTION/ SPECS./ WORK STATEMENT	202	X	J	LIST OF ATTACHMENTS	6
	D	PACKAGING AND MARKING	4			**PART IV - REPRESENTATIONS AND INSTRUCTIONS**	
X	E	INSPECTION AND ACCEPTANCE	30	X	K	REPRESENTATIONS, CERTIFICATIONS AND OTHER STATEMENTS OF OFFERORS	14
X	F	DELIVERIES OR PERFORMANCE	10				
X	G	CONTRACT ADMINISTRATION DATA	2	X	L	INSTRS., CONDS., AND NOTICES TO OFFERORS	14
X	H	SPECIAL CONTRACT REQUIREMENTS	38	X	M	EVALUATION FACTORS FOR AWARD	2

OFFER (Must be fully completed by offeror)

NOTE: Item 12 does not apply if the solicitation includes the provisions at 52.214-16, Minimum Bid Acceptance Period.

12. In compliance with the above, the undersigned agrees, if this offer is accepted within _____ calendar days (60 calendar days unless a different period is inserted by the offeror) from the date for receipt of offers specified above, to furnish any or all items upon which prices are offered at the price set opposite each item, delivered at the designated point(s), within the time specified in the schedule.

13. DISCOUNT FOR PROMPT PAYMENT (See Section I, Clause No. 52.232-8)

14. ACKNOWLEDGMENT OF AMENDMENTS (The offeror acknowledges receipt of amendments to the SOLICITATION for offerors and related documents numbered and dated):

AMENDMENT NO.	DATE	AMENDMENT NO.	DATE

15A. NAME AND ADDRESS OF OFFEROR CODE FACILITY

16. NAME AND TITLE OF PERSON AUTHORIZED TO SIGN OFFER (Type or print)

15B. TELEPHONE NO (Include area code)

15C. CHECK IF REMITTANCE ADDRESS IS DIFFERENT FROM ABOVE - ENTER SUCH ADDRESS IN SCHEDULE.

17. SIGNATURE

18. OFFER DATE

AWARD (To be completed by Government)

19. ACCEPTED AS TO ITEMS NUMBERED

20. AMOUNT

21. ACCOUNTING AND APPROPRIATION

22. AUTHORITY FOR USING OTHER THAN FULL AND OPEN COMPETITION:
[ ] 10 U.S.C. 2304(c)( ) [ ] 41 U.S.C. 253(c)( )

23. SUBMIT INVOICES TO ADDRESS SHOWN IN (4 copies unless otherwise specified) ITEM

24. ADMINISTERED BY (If other than Item 7) CODE

25. PAYMENT WILL BE MADE BY CODE

26. NAME OF CONTRACTING OFFICER (Type or print)

27. UNITED STATES OF AMERICA
(Signature of Contracting Officer)

28. AWARD DATE

IMPORTANT - Award will be made on this Form, or on Standard Form 26, or by other authorized official written notice.

CAUTION TO BIDDERS

All information required by the terms of the Solicitation must be furnished. MISTAKES OR OMISSIONS CAN BE COSTLY. Important items for you to check are included in but not limited to those listed below. This checklist is furnished only to assist you in submitting a proper bid. Check as you read.

[ ] Are you registered in the Central Contractor Database? See DFARS Clause 52.204-7004 "REQUIRED CENTRAL CONTRACTOR REGISTRATION" in Section I of this solicitation?

[ ] Have you acknowledged all amendments? Have you submitted your bid on the latest amended bid schedule?

[ ] Have you completed the "Representations and Certifications" {Section K} portion of the Solicitation? Is your Contractor Establishment Code listed on the Standard Form 33?

[ ] Is your bid properly signed by an officer of your company?

[ ] If a bid guarantee is required, is it included with your bid {A late bid guarantee is treated the same as a late bid.} and is it in the proper amount? {Usually 20 percent of the total bid price, including any options or additives.} If your bid guarantee is in the form of a bid bond, is the bond properly signed by both the bidder and surety and are all required seals affixed? A bid guarantee is required when your bid exceeds $100,000.00.

[ ] Is the name in which you submitted the bid the same on your bid as on the bid bond?

[ ] If required, have you entered a unit price for each bid item? {The solicitation will specifically state when this is necessary.}

[ ] The Government may reject a bid as nonresponsive if it is materially and mathematically unbalanced as to price for any bid item or combination of items. A bid is unbalanced when it is based on prices significantly less than cost for some work and prices which are significantly overstated for other work.

[ ] Are decimals in unit prices in the proper places? Are your figures legible?

[ ] Are the extensions of your unit prices, and your total bid price correct?

[ ] Are all erasures or corrections initialed by the person signing the bid?

[ ] Have you restricted your bid by altering the provisions of the solicitation?

[ ] If you are a large business and your bid is greater than $1,000,000.00 have you included your Sub-Contracting Plan in your bid package? {NOTE: AN AWARD WILL NOT BE MADE WITHOUT AN APPROVED SUB-CONTRACTING PLAN. IN ORDER TO BE APPROVED YOUR PLAN MUST DESIGNATE 5% OF THE TOTAL SUB-CONTRACTING DOLLARS TO SMALL DISADVANTAGED BUSINESSES}.

[ ] Is the envelope containing your bid properly identified that it is a sealed bid and does it contain the correct solicitation number and bid opening time?

[ ] Will your bid arrive on time? See paragraph entitled "Late Submissions, Modifications, and Withdrawals of Bids" in the Instructions to Bidders {Section L} of the solicitation.

July 02, 1998

THIS PAGE INTENTIONALLY LEFT BLANK

US Army Corps of Engineers

Marine Design Center

PLANS AND SPECIFICATIONS

TO

DESIGN, CONSTRUCT,
TEST AND DELIVER

TWO STEEL TOWBOATS
(WITH OPTIONS)

DACW61-02-R-0035

DEPARTMENT OF THE ARMY
Corps of Engineers
Marine Design Center
Philadelphia, PA

THIS PAGE INTENTIONALLY LEFT BLANK

Design, Construct, Test and Deliver two Steel Towboats for the Corps of Engineers, one each for Pittsburgh and Huntington Districts for use in support of their navigation and maintenance missions on the Ohio River and its tributaries, in accordance with the attached plans and specifications. In addition, up to two option line items may be awarded for one steel towboat each, for St. Paul District and Rock Island District:

ITEM NUMBER	ITEM	QTY.	UNIT	UNIT PRICE	TOTAL PRICE
0001	STEEL WORKBOAT (Pittsburgh District Vessel)	1	VESSEL	XXXX	XXXXXXX
0001AA	PLANNING (The submittals required for "Planning" are listed in contract clause H02.). This item is initiated by a Notice To Proceed (NTP) issued by the Contracting Officer.	1	JOB	XXXX	$_____
0001AB	ENGINEERING AND SCHEDULING (The submittals required for "Engineering and Scheduling are listed in contract Clause H02.). This item is initiated only by a Notice To Proceed issued by the Contracting Officer. The Contractor may not start this item until he receives a Notice To Proceed for this item.	1	JOB	XXXX	$_____
0001AC	CONSTRUCT, TEST AND DELIVER the vessel (The submittals for "Construct, Test and Deliver" are listed in contract Clause H02.). This item is initiated only by a Notice To Proceed issued by the Contracting Officer. The Contractor may not start this item until he receives a Notice To Proceed for this item.	1	JOB	XXXX	$_____
	TOTAL ITEM 0001	1	VESSEL	XXXX	$_____

ITEM NUMBER	ITEM	QTY.	UNIT	UNIT PRICE	TOTAL PRICE
0002	STEEL WORKBOAT (Huntington District Vessel)	1	VESSEL	XXXX	XXXXXXX
0002AA	PLANNING (The submittals required for "Planning" are listed in contract clause H02.). This item is initiated by a Notice To Proceed (NTP) issued by the Contracting Officer.	1	JOB	XXXX	$_____
0002AB	ENGINEERING AND SCHEDULING (The submittals required for "Engineering and Scheduling are listed in contract Clause H02.). This item is initiated only by a Notice To Proceed issued by the Contracting Officer. The Contractor may not start this item until he receives a Notice To Proceed for this item.	1	JOB	XXXX	$_____
0002AC	CONSTRUCT, TEST AND DELIVER the vessel (The submittals for "Construct, Test and Deliver" are listed in contract Clause H02.). This item is initiated only by a Notice To Proceed issued by the Contracting Officer. The Contractor may not start this item until he receives a Notice To Proceed for this item.	1	JOB	XXXX	$_____
	TOTAL ITEM 0002	1	VESSEL	XXXX	$_____

0003	STEEL WORKBOAT (OPTION, St. Paul District)	1	VESSEL	XXXX	XXXXXXX
0003AB	ENGINEERING AND SCHEDULING (The submittals required for "Engineering and Scheduling are listed in contract Clause H02.). This item is initiated only by a Notice To Proceed issued by the Contracting Officer. The Contractor may not start this item until he receives a Notice To Proceed for this item.	1	JOB	XXXX	$_____
0003AC	CONSTRUCT, TEST AND DELIVER the vessel (The submittals for "Construct, Test and Deliver" are listed in contract Clause H02.). This item is initiated only by a Notice To Proceed issued by the Contracting Officer. The Contractor may not start this item until he receives a Notice To Proceed for this item.	1	JOB	XXXX	$_____
	TOTAL ITEM 0003 (OPTION)	1	VESSEL	XXXX	$_____

0004	STEEL WORKBOAT (OPTION, Rock Island District)	1	VESSEL	XXXX	XXXXXXX
0004AB	ENGINEERING AND SCHEDULING (The submittals required for "Engineering and Scheduling are listed in contract Clause H02.). This item is initiated only by a Notice To Proceed issued by the Contracting Officer. The Contractor may not start this item until he receives a Notice To Proceed for this item.	1	JOB	XXXX	$_____
0004AC	CONSTRUCT, TEST AND DELIVER the vessel (The submittals for "Construct, Test and Deliver" are listed in contract Clause H02.). This item is initiated only by a Notice To Proceed issued by the Contracting Officer. The Contractor may not start this item until he receives a Notice To Proceed for this item.	1	JOB	XXXX	$_____
	TOTAL ITEM 0004 (OPTION)	1	VESSEL	XXXX	$_____
TOTAL	ALL VESSELS	4	VESSELS	XXXX	$_____

INSERT LOCATION OF THE SHIPYARD WHERE THE WORK WILL BE PERFORMED:

_____

_____

The Government may reject an offer as non-responsive if it is materially and mathematically unbalanced as to price for any offered item or combination of offered items. An offer is unbalanced when it is based on prices significantly less than cost for some work and prices, which are significantly overstated for other work.

Refer to contract Section M for EVALUATION FACTORS FOR AWARD criteria.

PART I - THE SCHEDULE - SECTION C
DESCRIPTION/SPECIFICATION/WORK STATEMENT

TABLE OF CONTENTS

C000 GENERAL 4
- C001 GENERAL MISSION STATEMENT 4
- C002 PRINCIPAL CHARACTERISTICS 6
- C003 DESIGN STANDARDS 6
- C004 CLASSIFICATION AND CERTIFICATION 7
- C005 VESSEL IDENTIFICATION 8
- C006 SCOPE OF WORK 9
- C010 DEFINITIONS 11
- C025 CONTRACTOR QUALITY STANDARDS 12
- C099 DESIGN COMPENDIUM 15

C100 SCIENTIFIC 16
- C105 HULL GEOMETRY 16
- C115 WEIGHT ESTIMATE & INCLINING 17
- C125 HYDROSTATICS AND CURVES OF FORM 18
- C130 COMPARTMENT CAPACITIES 19
- C145 TONNAGE MEASUREMENT 20
- C150 DAMAGED STABILITY 20
- C155 INTACT STABILITY 21
- C170 DRY DOCKING PLAN 23
- C180 NOISE AND VIBRATION 24
- C185 TESTS AND TRIALS 26

C200 ARRANGEMENTS 27
- C201 VESSEL CONFIGURATION 27
- C215 GENERAL ARRANGEMENTS 27
- C233 PILOTHOUSE 28
- C255 CONTROL CONSOLE 29

C300 STRUCTURE 30
- C301 GENERAL STRUCTURE 30
- C305 HULL STRUCTURE 30
- C313 FLOATING DECKHOUSE DESIGN 33
- C315 SUPERSTRUCTURE 36
- C316 STACKS 37
- C317 MASTS 37
- C320 TANKS 38
- C325 SEA CHESTS 41
- C326 TRANSDUCER WELLS 42
- C330 FOUNDATIONS 42

C400 OUTFIT 44
- C406 COATING SYSTEM 44

C410 HULL OUTFIT 52
C415 DOORS, WINDOWS, HATCHES AND MANHOLES 55
C420 DECK FITTINGS 62
C425 WALKWAYS, RAILINGS, GRATINGS AND FLOOR PLATES 63
C427 VERTICAL AND INCLINED LADDERS 68
C430 DECK COVERING AND CEILING 69
C435 JOINER WORK 73
C436 INSULATION AND SHEATHING 74
C437 FURNITURE AND FURNISHINGS 76
C445 LIFESAVING AND SAFETY 86
C450 UTILITY BOAT AND DERRICK 87
C456 WINCHES AND CAPSTANS 88
C460 NAMEPLATES, NOTICES AND MARKINGS 90
C461 NOTICES AND MARKINGS 92
C480 TELEPHONE & DATA COMMUNICATIONS 93
C481 TELEVISION SYSTEM 94
C600 MACHINERY 95
C601 GENERAL REQUIREMENTS FOR PIPING SYSTEMS & MACHINERY ... 95
C602 EQUIPMENT & PIPE MARKING 98
C605 PROPULSION SYSTEM 100
C606 PROPELLERS & NOZZLES 105
C610 SHAFTING SYSTEM 107
C612 RUDDERS 108
C615 STEERING SYSTEM 110
C630 FUEL OIL SYSTEM 114
C635 LUBE OIL SYSTEM 118
C636 WASTE OIL SYSTEM 119
C637 OILY BILGE SYSTEM 120
C640 ENGINE COOLING SYSTEM 121
C650 ENGINE EXHAUST SYSTEMS 123
C660 BILGE & BALLAST SYSTEM 124
C665 POTABLE WATER SYSTEM 127
C667 SANITARY & SEWAGE SYSTEM 131
C669 DRAINAGE SYSTEM 135
C670 VENTS, SOUNDS AND FILLS 136
C675 FIRE MAIN 137
C677 FIXED FIRE EXTINGUISHING SYSTEM 140
C678 FIRE DETECTION AND ALARM SYSTEM 141
C679 FIRE SAFETY EQUIPMENT 142
C685 HEATING, VENTILATION AND AIR CONDITIONING 144
C690 COMPRESSED AIR SYSTEM 155
C692 ALARM SYSTEMS 158
C700 ELECTRICAL 161
C701 GENERAL REQUIREMENTS FOR ELECTRICAL SYSTEMS 161
C702 ELECTRICAL EQUIPMENT & CABLING MARKING 161
C705 AC ELECTRICAL SYSTEMS 163

C706 DC ELECTRICAL SYSTEMS 163
C710 LOAD ANALYSIS 166
C715 FAULT CURRENT & CIRCUIT BREAKER ANALYSIS 166
C720 ONE LINE DIAGRAMS 167
C725 CABLING REQUIREMENTS 167
C730 LIGHTING AND RECEPTACLES 168
C735 ELECTRICAL POWER PLANT 178
C740 SWITCHBOARD & POWER CONTROL 182
C745 DISTRIBUTION PANELBOARDS 188
C750 MOTORS AND CONTROLLERS 189
C755 TRANSFORMERS 193
C760 SHORE POWER & OFF VESSEL SERVICES 194
C765 COMMUNICATIONS EQUIPMENT 195
C770 NAVIGATION EQUIPMENT 197
C800 SPARE PARTS 199
C805 MAJOR EQUIPMENT 199
C810 OTHER EQUIPMENT 200

PART I - THE SCHEDULE - SECTION C
DESCRIPTION/SPECIFICATION/WORK STATEMENT

C000 GENERAL

C001 GENERAL MISSION STATEMENT

The Marine Design Center (MDC) of the U.S. Army Corps of Engineers (USACE) has issued this solicitation to acquire two self-propelled inland river towboats, conforming to commercial standards. The vessels are intended to serve the U.S. Army Corps of Engineers, Great Lakes and Ohio River Division, one for the Huntington District, the other for the Pittsburgh District.

Two option line items are included in the solicitation for procurement of a third towboat for St. Paul District, and a fourth towboat for Rock Island District. Each vessel is intended to support their respective District's mission on the Upper Mississippi River. Except where specifically noted, the option vessels (CLIN 0003 & CLIN 0004) design and construction requirements are identical to those of the Huntington District vessel (CLIN 0002). Where the specifications and plans do not specifically address the St. Paul Towboat (CLIN 0003) or the Rock Island Towboat (CLIN 0004), it shall be assumed that the requirement for CLIN 0003 or CLIN 0004 is the same as the requirement for CLIN 0002.

A. MISSION

1. Pittsburgh District Towboat (Contract Line Item No. (CLIN 0001)

The primary mission of the towboat will be the year-round mobilization of the Pittsburgh District Repair Floating Plant to perform scheduled and emergency maintenance on the 327 miles of navigable channels and navigable structures on the Ohio, Allegheny and Monongahela Rivers. The vessel will operate approximately 1500 hours per year.

2. Huntington District Towboat (CLIN 0002)

The primary mission of the towboat will be year-round mobilization of the Huntington District Repair Fleet Floating Plant to perform scheduled and emergency maintenance to 400 miles of navigable channels and navigable structures on the Ohio and Kanawha Rivers. The vessel will operate approximately 1500 hours per year.

3. St. Paul District Towboat (Option CLIN 0003)

The mission of this towboat will be to support the seasonal mobilization of the Thompson Dredging Fleet on the Upper Mississippi River. The vessel will also provide support to year-round lock maintenance efforts. The vessel will operate approximately 1500 hours per year.

4. Rock Island Towboat (Option CLIN 0004)

The mission of this towboat will be to provide year-round support of the Upper Mississippi River maintenance fleet of the Rock Island District. The vessel will operate approximately 1500 hours per year.

B. ENVIRONMENTAL CONSIDERATIONS

1. Pittsburgh District Towboat (CLIN 0001)

The vessel shall be capable of operating in both shallow and ice and drift-strewn rivers.

Based on ASHRAE standards and the requirements specified by the Pittsburgh District, the vessel shall be designed to the worst temperature extremes as follows:

Ambient Temperature
95°F dry bulb max.
0°F dry bulb min.

2. Huntington District Towboat (CLIN 0002)

The vessel shall be capable of operating in both shallow and ice and drift-strewn rivers.

Based on ASHRAE standards, the vessel shall be designed to the worst temperature extremes at Morgantown and Beckley, WV as follows:

Ambient Temperature
4°F dry bulb min
87°F dry bulb max, 73°F wet bulb

3. St. Paul District Towboat (CLIN 0003)

The vessel shall be capable of operating in both shallow and ice and drift-strewn rivers.

Based on ASHRAE standards, the vessel shall be designed to the worst temperature extremes at St. Paul, MN.

4. Rock Island District Towboat (CLIN 0004)

The vessel shall be capable of operating in both shallow and ice and drift-strewn rivers.

Based on ASHRAE standards, the vessel shall be designed to the worst temperature extremes at Rock Island, IL.

C002 PRINCIPAL CHARACTERISTICS

These Specifications are intended to describe the Contract Design requirements for four inland rivers style towboats. The principal dimensions of these vessels are:

Length (W/O Fenders) ..... 124'- 0"
Beam Molded..... 33'-10"
Depth (at midship) ..... 10'- 3"

The Pittsburgh District Towboat (CLIN 0001) shall have a design full load draft no more than 7'-6". The Huntington, St. Paul, & Rock Island District Towboats (CLIN 0002, CLIN 0003, & CLIN 0004 respectively) shall have a design full load draft no more than 8'-6".

C003 DESIGN STANDARDS

The towboats shall be designed and constructed in accordance with the latest edition and interpretations of the rules, regulations, requirements and standards of the Legislation, Regulatory Agencies and technical organizations listed as follows or as stipulated in the respective specification clause:

- U.S. Army Corps of Engineers, Publication No. EM 385-1-1; "Safety and Health Requirements Manual." May be viewed at internet web site http://www.usace.army.mil/inet/usace-docs/eng-manuals/em385-1-1/toc.htm

- American Bureau of Shipping (ABS) "Rules for Building and Classing Steel Vessels for Service on Rivers and Intracoastal Waterways."
- American Bureau of Shipping "Guide For Crew Habitability on Ships."
- American Bureau of Shipping "Guide For Shipbuilding And Repair Quality Standard For Hull Structure During Construction."
- National Shipbuilding Research Program Publication NSRP 0490, January 1998; "Industrial Standards for Hull Structural Penetrations Design Criteria and Details."
- U.S. Coast Guard Regulation 46 CFR Subchapter C - "Uninspected Vessels" (but not for electrical design and installation).
- U.S. Coast Guard Regulation 46 CFR Subchapter J - "Electrical Engineering."
- U.S. Coast Guard Regulation 46 CFR Subchapter S - "Subdivision and Stability."
- U.S. Coast Guard, Navigation Rules and Regulations, International and Inland.
- U.S. Coast Guard Regulation 33 CFR Part 164, Navigation Safety Regulations.
- U.S. Public Health Service (USPHS) Publication No.393, "Handbook on Sanitation of Vessel Construction."
- Institute of Electrical and Electronic Engineers Standards, Publication No. IEEE-45 - "IEEE Recommended Practice for Electrical Installation on Shipboard."
- Illuminating Engineering Society, "Recommended Practice for Marine Lighting."
- National Electrical Code (NEC).

C004 CLASSIFICATION AND CERTIFICATION

The Contractor shall be responsible for preparing necessary drawings and calculations, obtaining necessary regulatory body reviews and approvals, obtaining

necessary inspections and surveys during construction and for the certification and classing of each vessel as follows:

- ABS classification for "Maltese Cross A-1 Towing Vessel, River Service with Maltese Cross AMS."

- U.S. Public Health Service (FDA) Certificate of Sanitary Construction.

The Contractor shall bear all expenses associated with the acquisition of the required classing and certifications.

If the Contractor intends to launch, test, operate, or tow the vessels "out of class," the Contractor must specifically advise ABS of such intent and incorporate any and all modifications required by that agency for such operation at no additional cost to the Government and with no additional contract time. Any such modification which, in the opinion of the COR, affects the arrangements, operability or suitability of the vessel shall be removed from the vessel by the Contractor at no additional cost or time and the vessel returned to new condition prior to Final Acceptance.

C005 VESSEL IDENTIFICATION

The vessels to be acquired through this solicitation have been assigned the following names and Marine Design Center hull and project numbers:

Pittsburgh District Towboat (CLIN 0001)

MDC Hull Number 557
MDC Project Number 2389
Vessel Name ..... To be determined

Huntington District Towboat (CLIN 0002)

MDC Hull Number 556
MDC Project Number 2350
Vessel Name ..... To be determined

St. Paul District Towboat (CLIN 0003)

MDC Hull Number 658
MDC Project Number 2594
Vessel Name ..... To be determined

Rock Island District Towboat (CLIN 0004)

MDC Hull Number 622
MDC Project Number 2555
Vessel Name ..... To be determined

The vessel names have not been selected at this time. For the purpose of initial documents and drawing preparation, the titles used shall be:

CLIN 0001 ....."CELRP TOWBOAT"
CLIN 0002 ....."CELRH TOWBOAT"
CLIN 0003 ....."CEMVP TOWBOAT"
CLIN 0004 ....."CEMVR TOWBOAT"

Upon selection of the official name for each vessel by the Government, the Contractor shall incorporate the name into all "as-built" documents. The MDC hull number shall be used in lieu of an "Official Number."

C006 SCOPE OF WORK

A. CONTRACTOR'S RESPONSIBILITY

The contract consists of three phases:

Phase I..... Planning
Phase II.....Engineering & Scheduling
Phase III ..... Construction, Tests & Delivery

In accordance with the three phases, the Contractor assumes complete responsibility for designing, building, testing, and delivering the vessels to meet the requirements of the contract. Should the Contractor determine at any time that he is unable to fulfill those responsibilities, he shall notify the COR immediately of the problem experienced and his proposed manner of correction.

B. CONTRACT INTENT

It is intended that the Contractor will be able to bid, and perform further design development of each vessel from the Contract Design provided by the contract specifications and plans.

The specifications delineate a "Contract Design" for each vessel. The hull geometry, lightship weight and CG, arrangements, hull geometry, rudders, shafting and engine requirements have been developed and shall be incorporated into each final vessel

design without change. Structure, mechanical systems, electrical systems, and tank capacities have been considered sufficiently to verify feasibility and to achieve an adequate level of confidence that each vessel concept will meet the performance and operational requirements, and design objectives of the U.S. Army Corps of Engineers.

The plans and specifications of this contract have been prepared in accordance with the referenced design standards. The plans and specifications have not been submitted to ABS, USCG, or USPHS for approval. The Contractor shall prepare a Final Design for each vessel and submit each design for approval to ABS, USPHS, and USACE.

C. DETAILED DESIGN

During Phase II, Engineering & Scheduling, it is the Contractor's responsibility to complete the Detailed Design of each vessel based on the "Contract Design" developed for that vessel. The Detailed Design is the basis for construction and is always completed prior to the start of construction.

Once the Detailed Design phase has commenced, changes in hull dimensions and subdivision, for other than very minor changes in arrangement, will not be made.

The Detailed Design must be so clear in its intent that the features, characteristics, capabilities, design criteria, margins and success criteria of each component or system cannot be mistaken. The level of detail presented and documented by calculation in the Detailed Design shall be sufficient for all required regulatory approvals, and for the Government's quality assurance function.

D. DRAWINGS PROVIDED AND REQUIRED

1. Contract & Reference Drawings

The contract drawings of the "Contract Design" as listed in Section J, Clause J01, Contract Drawings. The Contract Drawings are provided with these specifications for bid purposes as well as to develop the Detailed Design.

Also provided as part of this solicitation are Reference Drawings. Reference Drawings shall be used in conjunction with the Contract Drawings and the specifications to finalize the Detailed Design of each vessel.

It is intended that the Reference Drawings provide general guidance to the Contractor in the methodology intended to develop specific systems or design features as called out in this specification. The exact details presented in the Reference Drawings may not reflect the specific needs of each vessel.

The Reference Drawings provided with the specification are listed in Section J, Clause J01.

2. Drawings Required

The minimum drawings required to be completed during the Engineering and Scheduling phase of this contract in order to complete the Detailed Design are listed in Section H, Clause H13, Engineering & Drawings. The requirements for developing the Detailed Design drawings are delineated in Clause H03 with any specific requirements for structure or mechanical systems defined in the relevant contract clauses.

The requirements for "As-Built" drawings of each completed vessel are defined in Section H, Clause H14, "As-Built" Drawings.

C010 DEFINITIONS

The following definitions are applicable to phrases and acronyms used throughout this contract:

- K.O. - Contracting Officer - A person with the authority to enter into, administer and/or terminate contracts and make related determinations and findings.

- COR - Contracting Officer's Representative - a member of the contract management and quality assurance team authorized by the Contracting Officer to perform certain administrative and managerial duties. A copy of the COR's authority letter is furnished to the Contractor.

- GFE - Government Furnished Equipment - Equipment, materials or components furnished by the Government to the Contractor for installation in the vessel.

- USACE - Acronym for United States Army Corps of Engineers.

- MDC - Acronym for Marine Design Center.

- QC - Quality Control - Quality Control is a function of the Contractor. Refer to clause E03. Quality Assurance (QA) is a function of the Government.

C025 CONTRACTOR QUALITY STANDARDS

The Contractor shall be responsible for the construction of complete and functioning vessels. The Contractor shall utilize the specified components so as to meet specification requirements utilizing construction and testing methods to ensure that the complete vessels shall conform to the intended design.

Inspection by the Marine Design Center is for the purpose of verifying the proper function of the Contractor's quality control measures and is not to be used as a substitute for control of quality by the Contractor.

A. STRUCTURAL MATERIALS

Unless otherwise specified or noted on the Contract Drawings, all structural hull material shall be in accordance with the following specifications:

- American Bureau of Shipping (ABS), "Rules for Building and Classing Steel Vessels" and "Rules for Building and Classing Steel Vessels for Service on Rivers and Intracoastal Waterways."

- Welding Materials - ABS "Approved Welding Electrodes, Wire-Flux and Wire Gas Combination."

B. STANDARD PARTS AND MATERIALS

All articles, fittings, equipment, machinery, supplies, and materials used in the construction and outfitting of the vessels shall be the highest grade, free from defects and imperfections, unused and, be the standard product of reputable manufacturers, to the maximum extent practicable. Any material not specified shall be the best of their kind for the purpose intended.

Materials specified herein to meet the requirements of standard specifications published by national authorities shall conform with the respective editions, including amendments, specified. No salvage materials shall be used in the work.

C. WORKMANSHIP

All labor shall be especially skilled for each kind of work and under competent direction.

In engaging one kind of work with another, marring or damage of previously acceptable construction shall be cause for rejection. All parts of the vessel intended to join or bear upon other parts shall have complete and solid contact and shall fit together without excessive cold work during erection. Shims or liners shall not be used for the purpose of overcoming a bad fit. Lightening holes may be punched or flame-cut and all

edges shall have burrs removed. Holes in members having sharp curvature shall be avoided.

D. WELDERS

All welding under this contract shall be done only by welders who have successfully passed qualification tests accepted by the American Bureau of Shipping or other regulatory bodies acceptable to ABS.

The Contractor shall bear the expense of conducting these tests and shall certify, by name to the Contracting Officer, welders who have successfully passed the prescribed tests and hold current, valid certifications.

The Contractor shall require any welder to repeat these tests when in the opinion of the Contracting Officer, the work of the welder indicates a reasonable doubt of his proficiency. In such cases the welder shall be re-certified as above if he successfully passed the retest; otherwise, he shall be disqualified until he has successfully passed the retest.

The Contractor shall maintain records of each welder's certification during the course of the contract. The records are to be available for examination upon request of the Contracting Officer.

E. WELDING

All welding shall be in accordance with the current rules of the American Bureau of Shipping. All welding equipment used on the work shall be of a modern type subject to close control. The electrodes used throughout the work shall be suitable for use with the parent metal at each weld, and be approved by ABS.

Welding procedures, as to direction, length, numbers and sequence of beads, shall be carefully planned to minimize lock-up stresses. Care shall be exercised to produce smooth even beads, especially on all exposed plating and fittings. Beads shall be ground where directed by the Contracting Officer.

The Contractor shall employ appropriate welding procedures and grounding connections to preclude the possibility of anodic erosion of the hull after launching.

F. INSTALLATION

Materials and equipment shall be installed in accordance with the approved recommendations of the manufacturer, and in compliance with the contract documents. The installation shall be accomplished by workmen skilled in this type of work.

G. PLATE FAIRNESS

Steel plating shall be installed using proper welding procedures and sequences to insure fair, undistorted plating panels. The use of filler materials to surface unfair areas is not acceptable.

Maximum allowable plating distortion is depicted in the "Guide For Shipbuilding And Repair Quality Standard For Hull Structure During Construction" from ABS. Distortion shall not exceed the amounts in this guide.

H. CONSTRUCTION STANDARDS

All material, machinery and equipment shall be new, of current manufacture and suitable for the marine service intended. Spare parts and service shall be readily obtainable.

All material, unless otherwise specified in these specifications or in the drawings, shall be of commercial quality to ASTM, ANSI, or SAE specifications.

During construction and before delivery, the Contractor shall be responsible for protection of all material, equipment, etc., intended for the vessels.

The overweight tolerance of members shall be within the limits defined by the specifications of the American Society for Testing and Materials.

All materials shall be free of imperfections due to manufacturing processes and from defects which adversely affect appearance or serviceability.

All sharp edges or projections which constitute a personnel hazard shall be removed or ground smooth. All notches shall have a radius to prevent stress concentrations.

Where aluminum must be attached to dissimilar metals or between dissimilar alloys of aluminum, fasteners shall be of stainless steel of an approved design with insulation as required to eliminate metal-to-metal contact.

All galvanizing shall be done after fabrication by the hot dip process, and the zinc shall be not less than 98% pure. In instances where some types of metals cannot be hot dip galvanized, zinc silicate coating may then be substituted.

C099 DESIGN COMPENDIUM

The Contractor shall develop and maintain a design history of their involvement in the project. This history will be referred to as the Design Compendium.

The Design Compendium is intended to record and document the design and construction process. A single Design Compendium shall be maintained incorporating all data for all vessels. Data differing from one vessel to another, shall be clearly labeled as to which vessel it pertains.

The Design Compendium shall be organized by Contract Clause, including only those Clauses having design history content.

Design data and calculations are to be clearly presented and easy to follow, with stated introduction, purpose, assumptions, references, method of calculation, discussion of results, summary of results and conclusions.

The design process is presented in a clear path indicating the selected design data as well as the rejected or voided data, and the engineering analysis which lead to each selection/rejection. All background engineering, catalog "cut" sheets, and vendor material validation sheets are included in the Design Compendium.

The Design Compendium shall contain a table of contents. Each section shall contain:

- Applicable rules and regulations
- Correspondence/phone conversation records
- Calculations
- Design sketches
- Equipment selection
- Catalog "cut" sheets

The Design Compendium shall be submitted in its final form, including the construction process, as an "As-Built" document (reference Clause H14).

C100 SCIENTIFIC

C105 HULL GEOMETRY

A. CONTRACT DRAWINGS

CLIN 0001
557-B105-01, LINES PLAN
557-B105-02, FRAMES & OFFSETS

CLIN 0002, CLIN 0003 & CLIN 0004
556-B105-01, LINES PLAN
556-B105-02, FRAMES & OFFSETS

B. GENERAL

The hull shape of each vessel shall be as shown on the Contract Drawings. The hull has been formed to maximize vessel thrust and speed and shall not be altered.

C. PRINCIPAL CHARACTERISTICS

CLIN 0001

Length (W/O Fenders) ..... 124’-0”
Beam Molded..... 33’-10”
Depth @ Midship..... 10’-3”
Draft (Full Load)..... 7’-6”
Air Draft (Maximum) ..... 34’-0”

CLIN 0002, CLIN 0003 & CLIN 0004

Length (W/O Fenders) ..... 124’-0”
Beam Molded..... 33’-10”
Depth @ Midship..... 10’-3”
Draft (Full Load)..... 8’-6”
Air Draft (Maximum) ..... No Restriction
Height of Eye (Minimum) ..... 36’-0”

C115 WEIGHT ESTIMATE & INCLINING

A. TARGET LIGHTSHIP WEIGHT AND LCG

The Concept Design determined that the following weight and LCG were required to meet the draft and stability criteria of each vessel:

CLIN 0001
Lightship Weight ..... XXX.5 Long Tons
LCG (From Bow).....XX.5 Feet

CLIN 0002, CLIN 0003 & CLIN 0004
Lightship Weight ..... 442.9 Long Tons
LCG (From Bow).....63.5 Feet

B. WEIGHT & CENTER OF GRAVITY ESTIMATES & MONITORING

The Contractor shall implement a careful weight estimating and monitoring procedure.

The Contractor shall be bound to the target lightship weight and LCG. The actual lightship weight, VCG and LCG shall be determined by the inclining experiment. (Refer to Clause C115.D)

If the anticipated draft and trim of the vessel are adversely impacted by unpredicted weight growth, the Contractor shall be obligated to determine the cause of the weight growth and take remedial action to return the weight and LCG to the target.

C. WEIGHT ESTIMATE

During the Engineering & Scheduling phase of the contract, the Contractor shall prepare a detailed weight estimate for each vessel. The estimate shall be based on the Detailed Design. Weights and centers of gravity shall be documented in a spreadsheet type format using MDC's Work Breakdown Structure (WBS) format.

The detailed weight estimate shall be complete with the Vertical and Horizontal location of the center of gravity of all the items included in the estimate. The transverse center of gravity shall be provided for all items that are not symmetrical about the centerline.

The Contractor shall also provide a separate document detailing the weights and centers of the floating deckhouse. The document shall be submitted for Government review and acceptance, prior to selection and arrangement of the isolator spring supports. The format for this weight estimate shall be similar to that prepared for the entire vessel.

However, the floating deckhouse weights shall be subtotaled for each level of the deckhouse.

The Contractor shall maintain an updated weight estimate during the Engineering phase and a revised (lightship) weight estimate shall be submitted to MDC at the conclusion of the Engineering & Scheduling phase to ensure compliance with the target.

Upon completion of the Construction phase, the weight estimate shall be updated and a verification of the weight and centers of gravity made against the vessel's inclining.

D. INCLINING

Upon completion of all work, with the vessels in the lightship condition, an inclining test shall be conducted on each. The inclining test shall be carried out in accordance with ASTM F 1321-90. The Contractor shall provide an inclining report in accordance with this criterion that gives the "as inclined" and "lightship" load condition displacements and CG locations.

C125 HYDROSTATICS AND CURVES OF FORM

Hydrostatic calculations have been performed, and curves of form determined during the Contract Design. The successful bidder shall be provided with these documents.

The hydrostatic calculations include the shell plating. The following are the design conditions in the full load condition with ballast:

CLIN 0001

Design (Full Load) Draft ..... 7'-6"
Trim..... 0'-0"
Displacement..... XXX.0 Long Tons
LCG.....XX.1 Feet aft of the bow

CLIN 0002, CLIN 0003 & CLIN 0004

Design (Full Load) Draft ..... 7'-7 1/2"
Trim ..... 0'-0"
Displacement ..... 609.9 Long Tons
LCG..... 56.2 Feet aft of the bow

The Contractor shall only be required to calculate new hydrostatic properties if the hull geometry (including plate thickness) is changed.

If hydrostatic calculations are performed, they shall be in tabular form and completed for drafts from 1 foot to the deck edge in 3-inch increments. The tabulated hydrostatic curves may be plotted on a standard D size drawing or 8-1/2" by 11" paper. Resulting calculations shall be presented in graphic form on a grid background. The curves are to include as a minimum:

- Displacement in fresh water, full and molded
- Center of buoyancy (LCB, VCB)
- Tons per inch immersion (TPI)
- Longitudinal center of flotation (LCF)
- Transverse and longitudinal metacentric heights (KM_L, KM_T)
- Moment to trim one inch (MT1")
- Block prismatic and waterplane coefficients (C_b, C_p, C_w)

The hydrostatics shall be performed using the GHS computer software (Creative Systems Inc., Port Townsend, WA 360-385-6212). The hull definition file (or *.gf file) shall be provided in electronic format (on a 3.5" disk or CD ROM) with the hydrostatics submittal.

C130 COMPARTMENT CAPACITIES

A. CONTRACT DRAWINGS

CLIN 0001
557-B130-01, TANK CAPACITY PLAN

CLIN 0002, CLIN 0003 & CLIN 0004
556-B130-01, TANK CAPACITY PLAN

B. TANK CAPACITIES

The minimum tank capacities shall be as follows:

- Fuel Oil Tanks (CLIN 0001).....26,000 gallons
- Fuel Oil Tanks (CLIN 0002, 0003 & 0004) .....32,000 gallons
- Fuel Oil Day Tank .....2,800 gallons
- Genset Fuel Oil Day Tank .....500 gallons
- Lube Oil Tank.....800 gallons
- Gear Oil Tank .....500 gallons
- Hydraulic Oil Tank .....600 gallons
- Oily Bilge Tank.....650 gallons
- Slop (Waste) Oil Tank .....650 gallons
- Potable Water Tanks (CLIN 0001).....9,900 gallons

- Potable Water Tanks (CLIN 0002 & CLIN 0003)..... 11,400 gallons
- Sewage Holding Tanks ..... 5,400 gallons

The potable water tanks shall be re-configured during the Engineering Phase to efficiently accommodate the capstan motors below the main deck. More potable water capacity is preferred.

Ballast tank capacity and requirements shall be re-evaluated by the Contractor during the Engineering Phase based on the final configuration of the Potable Water tanks and Weight Estimate (Clause C115.C).

Sounding tables in gallons per inch shall be provided for all tanks. The Sounding tables shall be presented in tabular form with one tank per page on 8 1/2" x 11" paper using the GHS computer software. Each table shall include the identity of the tank (as labeled on the drawings), its location in the vessel and the center of gravity (longitudinally, vertical and transversely) of the fluid at each sounding level. The compartmentation definition files shall be submitted in electronic format with the Sounding tables.

Inage capacity sounding tables shall be provided for the main fuel oil tanks, fuel oil day tank, lube oil tanks, hydraulic oil tank, oily bilge tank, waste oil, grey water holding tank, and sewage holding tank. Tables shall note location of the sounding tube, and location and height of striker plate above the baseline and tank bottom.

C145 TONNAGE MEASUREMENT

The Contractor shall be required to perform a tonnage measurement calculation for each vessel. The calculation shall comply with the U.S. Coast Guard Code of Federal Regulations Title 46 CFR Part 69, Subpart B, Convention Measurement System.

The Contractor shall provide a Certificate of Measurement issued by the measuring organization, as authorized by 46 CFR 69.15, prior to delivery of each vessel.

The tonnage measurement calculation shall include sketches of each deck level with dimensions shown. A table of volumes showing the total for each level and a summation of volumes shall be provided. Any deductions shall be clearly identified.

C150 DAMAGED STABILITY

Each vessel shall meet a one compartment damaged stability standard in the most critical loading condition where, with any one compartment flooded, shall maintain positive righting arm and all parts of the margin line remain above the flooded waterline.

The margin line shall be 3 inches below the main deck edge. The hull compartmentation developed during the Contract Design complies with this requirement.

Damaged stability calculations shall show equilibrium water lines, curve of righting arm versus heel angle in 5-degree increments to capsize angle for each flooded compartment. The freeboard shall be reported at the four deck corners, and at each deck knuckle for each damaged condition.

The Contractor shall prepare a damaged stability analysis for each vessel during the Engineering Phase of this contract verifying compliance with this criteria. Any calculations showing a failure to meet this criteria shall be reported in a timely manner to the COR with recommendations for correction. The analysis shall be performed using the GHS computer software and all run files and macros used in calculating the damaged stability shall be submitted with the analysis in electronic format. The analysis shall be repeated using the lightship weight determined by deadweight survey after completion of the vessel (prior to Final Acceptance).

The damaged stability calculations shall be presented in report form with a cover sheet complying with the drawing standards and including a title block (see Clause H13). The report shall include a table of contents, summary, explanation of all assumptions and clear definition of origins and units used, and the finished calculations.

C155 INTACT STABILITY

A. GENERAL

Intact stability calculations shall be performed for each vessel in accordance with U.S. Coast Guard Code of Federal Regulations 46 CFR 170.173(e) for protected routes. Specific criteria shall be as follows:

- Positive righting arm to at least 25 degrees of heel.
- No downflooding point to at least 15 degrees of heel.
- At least 10 foot-degrees of righting energy to the smallest of the following heel angles:

  a. Angle of Max. Righting Arm
  b. Angle of Downflooding
  c. 40 degrees

The Contractor shall prepare a Trim and Stability analysis for each vessel during the Engineering Phase of the contract documenting compliance with the criteria. The hull compartmentation developed during the Contract Design complies with this requirement. Any calculations showing a failure to meet the criteria noted herein shall be reported in a timely manner to the COR with recommendations for correction.

The Contractor shall take care to verify that all exterior door sills on the main deck level extend above the worst loading condition with downflooding heel angle of 15 degrees (See Clause C415.A). Any such door sill not meeting this requirement shall be raised to 1-inch above the downflooding waterline.

Thirty days prior to Final Inspection of the vessel, the Contractor shall provide a final Trim and Intact Stability Booklet for that vessel determining loading procedures to maintain a stable platform throughout the loading process. The lightship weight of the vessel shall be that determined from the Inclining Experiment. See contract Clause C115, paragraph D.

The Contractor shall provide intact stability calculations based on the parameters and conditions noted in the following paragraphs.

B. CONDITIONS

- Lightship with no ballast, consumables, personnel or stores
- Lightship with ballast and no consumables, personnel or stores
- 10% consumables (fuel oil, potable water, lube oils, hydraulic oil) and 90% waste (grey water and sewage) with a full compliment of personnel and stores and necessary ballast
- 50% consumables (fuel, lube oils, potable water) and 50% waste (grey water and sewage) with a full compliment of personnel and stores and necessary ballast
- 75% consumables (fuel, lube oils, hydraulic oil, potable water) and 25% waste (grey water and sewage) with a full compliment of personnel and stores and necessary ballast
- Full fuel, hydraulic oil and lube oils, 10% grey water and sewage, and full potable water tanks with a full compliment of personnel and stores and necessary ballast

C. PARAMETERS

Each vessel shall be capable of meeting the following parameters for all load conditions:

- No trim by the bow for any condition
- No heel for any condition
- Maximum trim by the stern of one-quarter degree for any condition
- Maximum draft stated in Clause C105.B

Water ballast shall be provided to achieve the above parameters.

D. CALCULATIONS

The Contractor shall perform calculations showing the following for each condition:

- Drafts forward and aft
- LCG, TCG, VCG
- Righting arm curve

The calculations shall be performed using the GHS computer software. All run files and macros used in the calculations shall be submitted with the analysis in electronic format.

The intact stability calculation shall be performed in report form with a cover sheet complying with required drawing standards and include a drawing title block (refer to Clause H13). The report shall include a table of contents, summary, explanation of all assumptions and clear definition of origins and units used and the finished calculations.

C170 DRY DOCKING PLAN

The Contractor shall develop a dry docking plan for each vessel. The dry docking plan shall be developed to show the blocking for standard dry docking and for cradles. It shall show all major hull structure on the bottom, all hull penetrations, all transverse and longitudinal bulkheads connecting with the bottom shell, and other features which could interfere with the setting and shifting of the blocks.

The dry docking plan shall include an alternate blocking/cradle arrangement to allow for the servicing of all areas of the bottom of the vessel.

The dry docking plan shall include:

- Lightship weight as determined by the Inclining Experiment and its LCG.
- Full load weight and LCG as determined by the As-Built Stability Calculations.

The plan shall identify the size (foot print) of blocks supporting the hull and maximum block loading (kips/foot-squared). Blocks shall be located to evenly distribute the loads and avoid undue stresses within the hull structure. Blocks shall be located in way of main structural longitudinal and transverse bulkheads wherever possible. Where blocking is located on frames other than bulkheads, appropriate docking brackets shall be designed and installed within the hull. Docking bracket details shall be shown on the structural drawings.

Consideration shall be given to properly supporting the nozzles.

With cradle supports, much of the bow and stern are unsupported. The Contractor shall provide calculations with the drawing submittal showing that the hull strength is adequate to handle the cantilevered load. The load anticipated at each cradle shall be stated on the drawing.

C180 NOISE AND VIBRATION

A. INTRODUCTION

Control of noise and vibration are paramount to the functionality of these vessels. Every effort shall be made to control noise and vibration. The Contractor shall be responsible for any corrective action necessary to reduce excessive noise to the levels described below.

On each vessel, the deckhouse forward of the upper machinery space shall be segregated from the hull and the deckhouse aft.

B. NOISE CRITERIA

The following noise levels shall not be exceeded within the given space:

HULL

Fwd Store ..... 80 dB(A)
Fwd Machinery Space..... 80 dB(A)
Lower Engine Room ..... 110 dB(A)
Shaft Alley ..... 80 dB(A)

MAIN DECK

Upper Machinery Space..... 110 dB(A)
Generator Room..... 110 dB(A)
Steering Gear Room..... 80 dB(A)
Engineer's Workshop..... 75 dB(A)
Exterior ..... 75 dB(A)

FLOATING DECKHOUSE

Galley..... 75 dB(A)
Mess ..... 65 dB(A)
Lounge (CLIN 0002, 0003 & 0004only) .. 65 dB(A)
Laundry (CLIN 0002, 0003 & 0004only).. 75 dB(A)
Ship's Office ..... 60 dB(A)
Staterooms and T/S spaces..... 55 dB(A)
Pilothouse ..... 60 dB(A)

C. VIBRATION CRITERIA

See Clause C313 for details.

D. NOISE AND VIBRATION CONTROL

Some control measures that shall be considered to meet the criteria are as follows:

- Effective noise barrier around high noise spaces to prevent noise transmission to adjacent spaces, and sound absorbing material around high noise spaces, to reduce contribution of reverberant noise within the space.

- Installing vibration isolators for the diesel generators and all rotating machinery such as pumps and fans in order to reduce noise and vibration transmission through the structure.

- Flexible mounting of ventilation and other service lines.

- Ensuring that all pipe and duct joints are tight and that all penetrations through spaces are sealed.

- Use of low noise components, e.g. tighter tolerances etc.

- Ensure that the impedance of the foundation supporting the resilient mount is 10 times the impedance of the resilient mount.

- Ensure that the forcing frequencies are not within +/- 25% of the foundation natural frequencies.

- Ensure that the resilient mount/vibration isolator natural frequencies are not greater than 50% of the forcing frequencies.

- All diesel exhaust lines and exhaust silencers shall be mounted using vibration isolators.

- Installing acoustic louvers on all engine and generator room ventilation.

C185 TESTS AND TRIALS

This vessel and its component parts shall undergo testing and trials in accordance with Clause E05.

C200 ARRANGEMENTS

C201 VESSEL CONFIGURATION

A. CONTRACT DRAWINGS

CLIN 0001
557-B205-01, OUTBOARD PROFILE
557-B215-01, GENERAL ARRANGEMENT
557-B233-01, PILOTHOUSE DETAILS
557-B245-01, HOLD & MACHINERY ARRANGEMENT

CLIN 0002, CLIN 0003 & CLIN 0004
556-B205-01, OUTBOARD PROFILE
556-B215-01, GENERAL ARRANGEMENT
556-B233-01, PILOTHOUSE DETAILS
556-B245-01, HOLD & MACHINERY ARRANGEMENT

B. GENERAL

The configuration of the superstructure, the hull and the deck arrangement for each vessel shall be as shown on the above Contract Drawings. Watertight bulkheads have been located within the hull to maximize damage stability.

The vessels are arranged to provide ready accessibility to machinery and operating equipment for operation, maintenance, and inspection. Provisions have been made for the removal of the main engine, generators, and other major equipment through hatches or other access. Where equipment, machinery or furnishings have not been shown on the drawings, the Contractor shall provide locations and include that information on subsequent revisions of the above drawings.

There shall be no deviations from the contract drawings without written authorization of the COR.

C215 GENERAL ARRANGEMENTS

A. HULL

The hull depth of each vessel shall be subdivided, as shown on the Contract Drawings. Subdivisions are provided for transverse and longitudinal bulkheads into the ballast, fuel oil, potable water, grey water and sewage holding tanks, oil tanks, lower engine room, forward machinery space, forward storage, shaft alley and voids.

Access to the various below deck spaces shall be through appropriately sized hatches.

The forward storage space shall be fitted out with steel shelving for storage of rigging and supplies. The forward storage space shall have one square hatch (refer to Clause C415) with a vertical ladder (refer to Clause C427).

B. DECKHOUSE

There shall be no arrangement deviations from the Contract Drawings without written authorization of the COR.

1. Pittsburgh District Towboat (CLIN 0001)

The deckhouse is divided into the aft deckhouse and the floating deckhouse. The floating deckhouse shall have two levels of enclosed space above the Main Deck. Including the Main Deck level, the floating deckhouse shall comprise five staterooms with toilet/shower spaces (4 double and 1 single), galley, pantry, mess, lounge/office, office storage, deck toilet, deck storage, interior stairwell, and pilothouse. The aft deckhouse will include the upper machinery room, generator room, engineer's workshop, steering gear room, stacks, skiff and davit, and laundry.

2. Huntington District Towboat (CLIN 0002), St. Paul District Towboat (CLIN 0003) & Rock Island District Towboat (CLIN 0004)

The deckhouse is divided into the aft deckhouse and the floating deckhouse. The floating deckhouse shall have three and one-half levels of enclosed space above the Main Deck. Including the Main Deck level, the floating deckhouse shall comprise eight staterooms and toilet/shower spaces (3 double and 5 single), galley, pantry, mess, lounge, deck toilet, office, deck storage, laundry, plenum/electronics space, interior stairwell, and a pilothouse. The aft deckhouse shall include the upper machinery room, generator room, engineer's workshop, steering gear room, stacks, and a skiff and davit.

C233 PILOTHOUSE

The pilothouse shall have 360-degree visibility with a standard single piece control console and have a hidden toilet.

C255 CONTROL CONSOLE

A standard one-piece console shall be installed in the pilothouse as shown on the Contract Drawings. The console shall contain all controls, alarms, monitoring equipment, communication, and navigation equipment necessary for the vessel's operation.

The actual position and location of the equipment on the console and in the overhead shall be determined during the Construction Phase. The console arrangement shall be accepted by the COR prior to fabrication.

C300 STRUCTURE

C301 GENERAL STRUCTURE

The Contractor shall develop the structure for the Detailed Design and construct the vessels in accordance with the Contract Drawings.

The hull structure scantlings defined on the Contract Drawings provide basic concept level structure only. The drawings have not been submitted to ABS for review, but have been developed based on the ABS Rules specified in Clause C003. It is the responsibility of the Contractor to take these drawings to the next level of Detailed Design with all necessary plating, bulkhead and framing construction, and welding details and submit them to ABS for approval. The Contractor is expected to re-confirm or correct any concept level structure that does not meet the requirements of ABS.

The Contractor shall submit calculations required to determine all principal hull, deck, bulkhead and superstructure scantlings. The Contractor shall also submit calculations required to determine foundation scantlings, rigging components and lifting padeyes. Structural calculations shall be submitted with the associated structural drawings. Structural drawings will not be reviewed without accompanying calculations.

C305 HULL STRUCTURE

A. CONTRACT DRAWINGS

CLIN 0001

557-B105-01, LINES PLAN
557-B105-02, FRAMES & OFFSETS
557-B205-01, OUTBOARD PROFILE
557-B215-01, GENERAL ARRANGEMENTS
557-B245-01, HOLD & MACHINERY ARRANGEMENT
557-B301-01, INBOARD PROFILE
557-B306-01, TRANSVERSE & LONG'L STRUCTURAL SECTIONS
557-B307-01, DECK & BOTTOM STRUCTURE
557-B605-01, PROPULSION & SHAFTING ARRANGEMENT

CLIN 0002, CLIN 0003 & CLIN 0004

556-B105-01, LINES PLAN
556-B105-02, FRAMES & OFFSETS
556-B205-01, OUTBOARD PROFILE
556-B215-01, GENERAL ARRANGEMENTS

556-B245-01, HOLD & MACHINERY ARRANGEMENT
556-B301-01, INBOARD PROFILE
556-B306-01, TRANSVERSE & LONG'L STRUCTURAL SECTIONS
556-B307-01, DECK & BOTTOM STRUCTURE
556-B605-01, PROPULSION & SHAFTING ARRANGEMENT

B. DESCRIPTION OF WORK

The hull shall be of all welded steel construction and divided into watertight compartments with transverse bulkheads, in accordance with the Contract Drawings.

All hull steel shall conform to ASTM specification A36-81a for structural steel and be certified by ABS. All welding and weld sizes shall be in accordance with the applicable standards of the American Bureau of Shipping.

The shell and main deck plating shall be constructed of longitudinal strakes of lengths consistent with accepted practice for hulls. All seams shall be connected with full penetration welds. Plating layout shall be staggered so that the corners of four plates do not intersect at a common point.

Hull plating transverse seams may not fall within 6 inches forward or aft of flat-of-bottom tangent line.

The hull bottom and side shell shall not be less than 3/8-inch thick plating.

In addition to structural required by ABS Rules, the Contractor shall provide sufficient hull strength in the stern and the bow to support theses extremities as cantilevers during dry docking on cradles (refer to Clause C170). Calculations shall be provided with the hull structural drawings submitted to the Government showing that the hull strength meets the criteria without yielding the hull material. Deflection shall not exceed 1/180 of length of unsupported span.

C. PENETRATIONS

When penetrations are made in watertight bulkheads, shell or deck, the plating shall be restored to watertight condition in accordance with the ABS Rules referenced in Clause C003. When penetrations are made in oiltight bulkheads, shell or deck, the plating shall be restored to oiltight condition in accordance with ABS Rules referenced in Clause C003.

All such penetrations and deck openings shall be suitably designed and reinforced in accordance with the National Shipbuilding Research Program Publication NSRP 0490 (reference Clause C003).

D. INSERT PLATES

All deck fittings, deckhouse isolation springs, and deck equipment shall be mounted on insert plates welded continuously into the deck with bulkheads, headers or brackets below. Welding on all under deck structure (bulkheads, headers and brackets) shall be double continuous to 6 inches beyond the insert plate. Plates shall have 6-inch radius corners and extend a minimum of 6 inches beyond the item in all directions.

E. OVERBOARD DISCHARGES

All overboard discharge openings through the shell plating above the waterline, shall be located at or as close to the full load waterline.

All discharge penetrations shall not extend beyond the hull plating and shall be of extra strong pipe welded to a circular insert shell plate. Insert plates shall be of equal or greater thickness than the wall of the attached spool piece. No insert plate shall be less than the hull plate in the area of the penetration plus 1/8th inch.

Any pipe penetrating the hull below the flooded water line shall be fitted with schedule 80 spool pieces and sea valves. The inboard end of the spool piece shall have a 150 lb pipe flange to bolt to the sea valve. The sea valve shall be located less than 6 inches from the hull opening.

Openings shall be located well clear of draft marks and other hull markings as described in Clause C460.

F. LIFTING PADS

Lifting pads shall be provided throughout the generator room, upper machinery room, lower engine room, shaft alley, and steering gear room for the lifting of heavy equipment requiring removal for repair. Pads shall also be provided over soft patches or removal hatches to facilitate equipment removal from below deck.

Structure in way of the lifting pads shall be stiffened to prevent undue deflection under expected loads. The structure shall be designed with a factor of safety not less than 5 based on the ultimate strength of the material. Calculations shall be performed and submitted for lifting pads and support structure intended to lift weights in excess of 500 lbs. Lifting pads rated for 500 lbs. or more shall be shown on the structural drawings.

G. FRAMING FOR DOORS, WINDOWS, HATCHES & MANHOLES

All door, window, hatch and manhole openings shall be provided with headers as necessary to transfer the hull and local stresses around the openings. The headers shall be shown on the structural drawings. The requirements for the door, windows, hatches, and manholes are to be in accordance with Clause C415.

C313 FLOATING DECKHOUSE DESIGN

A. DRAWINGS

CLIN 0001

Contract Drawing	#557-B301-02, INBOARD PROFILE
Reference Drawing	#557-B313-01, SPRING ISOLATION DETAILS

CLIN 0002, CLIN 0003 & CLIN 0004

Contract Drawing	#556-B301-02, INBOARD PROFILE
Reference Drawing	#556-B313-01, SPRING ISOLATION DETAILS

B. DESCRIPTION OF WORK

The deckhouse forward of Frame #31 shall be installed as a floating house as shown on the Contract Drawings. This floating deckhouse shall be mounted on vibration isolators to reduce vibration and noise transmitted from the hull to the deckhouse.

The structural framework of the floating deckhouse shall be designed to efficiently direct the deckhouse weight and dynamic loading to the spring supports.

As part of the Detailed Design, the Contractor shall perform calculations to select the vibration isolators and design the supporting foundations and structure for the floating house.

C. DECKHOUSE WEIGHT ESTIMATE

The Contractor shall prepare and submit a detailed weight and center of gravity estimate for the "floating" deckhouse to the Government for review and acceptance. The format shall be in accordance with Clause C115.

Upon the Government's acceptance of the Contractor's detailed weight and centers of gravity estimate for the floating deckhouse, the Contractor shall determine the isolator size(s), number and arrangement, necessary to properly isolate and support the deckhouse.

D. DESIGN CALCULATIONS

The Contractor shall perform calculations for isolator selection as well as to analyze and design the isolator pedestal and supporting hull and floating deckhouse structure. These calculations shall be submitted to the Government for review and acceptance. The calculations submitted shall be neat and contain all assumptions, design methodologies, references and formulas.

E. LOADING & VIBRATION CRITERIA

The Contractor shall consider the following loading and vibration criteria for arrangement and selection of the vibration isolators:

1. Loading Criteria

Deadweight, based upon the greater of the following:

- The results of detailed weight and center of gravity estimate.

- Uniform loading corresponding to "h" values defined in ABS River Rules (Part 3, Section 6 - Towboats) multiplied by a standard cargo density of 45 lbs per cubic foot, applied to all decks including pilothouse top, and deckhouse structure weight.

Combined effect of deadweight and basic wind speed of 100 MPH, in any direction, for vessel docking.

Combined effect of deadweight and dynamic loads. The Contractor shall be responsible for determination of the appropriate dynamic loads for each vessel.

2. Vibration Criteria

The forcing frequencies shall not be within +/- 25% of the floating deckhouse structure natural frequencies.

The isolator natural frequencies are not greater than 50% of the forcing frequencies.

The maximum vibration levels occurring in the three individual translation axes (longitudinal, transverse and vertical) and combined multi-axis vibration levels, shall not exceed the maximum weighted root-mean-square acceleration levels shown for the notation "HAB+" in Section 3, Table 1 of the ABS Guide for Crew Habitability on Ships, issued December 2001.

F. ISOLATOR ARRANGEMENT & SELECTION

Based on the above criteria, the isolators shall be located so that the deckhouse is level (parallel to the plane of the main deck) under static loading conditions. Isolators shall also be located so that they are placed directly over and directly under deckhouse and hull framing or bulkhead structure. Complete or partial mounting of isolators on plate panels is not acceptable. Isolator arrangement shall allow for alignment of isolator

housings in longitudinal and transverse directions, to provide resistance in both directions.

The isolators shall be similar to BXL series, all-directional restrained spring isolators for floor mounting, available from Vibration Eliminator Co., Inc., Copiague, NY (POC - Mr. John Dessi, Tel. 631-841-4000).

Isolators shall be provided with limit stops to prevent collapse of the isolator/deckhouse system, as a result of impact loads from grounding or collision.

The isolators supplied shall be galvanized using the zinc electroplating process and then painted with a marine grade coating, to prevent corrosion.

G. ISOLATOR FOUNDATIONS & INSTALLATION

The Contractor shall be responsible for providing isolator pedestals, and hull and deckhouse structure, that are capable of withstand the applied loads. The design of the pedestals, hull and deckhouse structure in way of isolators shall meet the allowable stress criteria defined in the American Institute of Steel Construction (AISC) Allowable Stress Design (ASD) Manual, Ninth Edition, in addition to the requirements of the ABS River Rules.

Insert plates shall be provided on the hull and deckhouse in way of the isolators. See Contract Clause C305.

Isolators shall be mounted on stiffened plate pedestal structures similar to those shown on the Reference Drawings in order to provide the required height for the void space between the floating deckhouse and the main deck. In lieu of the vertical chocks shown as part #6 in the Reference Drawings, flanged tee sections shall be used to provide greater support of the free ends of the bolting flange. The angle of the flared side shall not exceed 60 degrees. The width of the pedestal base plate shall be increased to accommodate the wider tee section stiffeners.

The isolating springs shall be secured to the pedestal and the deckhouse in accordance with the manufacturer's recommendations. The Reference Drawings are provided for installation guidance.

The Contractor shall adjust the isolator deflections after installation, to ensure that the isolator loads are equalized. The Contractor shall provide all materials necessary to achieve the isolator adjustments.

H. DECKHOUSE BOOT & GASKET

The Contractor shall supply and install a neoprene boot around the base of the floating deckhouse. The boot shall be similar to that shown on the Referenced Drawings.

The Contractor shall supply and install a gasket between the interface of the floating (forward) deckhouse and the non-floating (aft) deckhouse.

Both the boot and the gasket shall be designed to be weathertight.

C315 SUPERSTRUCTURE

A. CONTRACT DRAWINGS

CLIN 0001
557-B205-01, OUTBOARD PROFILE
557-B215-01, GENERAL ARRANGEMENT
557-B233-01, PILOTHOUSE DETAILS
557-B301-02, INBOARD PROFILE

CLIN 0002, CLIN 0003 & CLIN 0004
556-B205-01, OUTBOARD PROFILE
556-B215-01, GENERAL ARRANGEMENT
556-B233-01, PILOTHOUSE DETAILS
556-B301-02, INBOARD PROFILE

B. DESCRIPTION OF WORK

The Contractor shall design and construct a steel deckhouse meeting the ABS requirements of 3/6.17 and the dynamic loads resultant from the floating deckhouse (Clause C313). The deckhouse shall be installed on the main deck of each vessel as shown on the appropriate Contract Drawings.

The deckhouse shall be of all welded steel construction. All steel used for the deckhouse shall conform to ASTM specification A36-81a for structural steel. All welding and weld sizes shall be in accordance with the applicable standards of the American Bureau of Shipping.

A maximum air draft of 34 feet above the 10% full load waterline is required for CLIN 0001. No permanent structure or equipment shall extend beyond this height.

The minimum height of eye for the operator standing in the pilothouse of CLIN 0002, CLIN 0003 and CLIN 0004 shall be 36 feet above the full load waterline.

The deckhouse is divided into floating and non-floating sections. The deckhouse, aft of Frame #31, is the non-floating section. The deckhouse forward of Frame #31, is the floating section.

The floating section shall be designed and constructed on a system of vibration isolating springs. The forward deckhouse must be physically disconnected from the aft

deckhouse while maintaining the appearance of being a single structure. To that end, the plane where the two structures meet shall be weathertight while allowing the forward deckhouse to move.

C316 STACKS

Stacks shall be fabricated and installed to house the silencers for the main engines, diesel generator sets, and the fire pump diesel engine. See contract Clause C650 for the requirements of the diesel engine exhaust systems.

The stacks shall be designed and constructed of welded steel on hatches. The stacks and hatches shall be removable to allow the removal of the diesel engines, reduction gears, and generator sets for maintenance or replacement. An exhaust fan shall be mounted on the aft side of each stack.

Removable, weathertight bolted hatches, 26 inches long by 24 inches high (oblong shaped) shall be installed in the inboard sides of each main engine stack. The hatches shall be located at the top and the bottom to permit access to the stacks. For the generator stack, a single hatch, of the same size, shall be located towards the bottom in order to provide access to the stack.

C317 MASTS

A. CONTRACT DRAWING

CLIN 0001
557-B205-01, OUTBOARD PROFILE

CLIN 0002, CLIN 0003 and CLIN 0004
556-B205-01, OUTBOARD PROFILE

B. DESCRIPTION

Masts shall be provided and installed for navigation lights, day markers, warning lights, flags, and radar antennas in a similar manner as that shown on the above contract drawing. For CLIN 0001, all masts provided shall ensure that the maximum air-draft for the vessel of 34 feet measured from the 10% full load waterline is met. There is no maximum air-draft requirement for CLIN 0002, CLIN 0003 and CLIN 0004.

The Contractor shall provide and install a Pilot House top mounted navigation light mast that will hinge forward. When in the hinged down position, the mast shall be located such that all lights may be serviced from the Pilot House top. A mast rest cradle shall be provided to support the mast when it is in the down position.

The flag mast shall incorporate a gaff (spar) and a yardarm. Both the gaff and yardarm shall be fitted with staples, sheaves, and halyards suitable for flying both the United States flag and the USACE flag. Galvanized cleats shall be provided to secure the halyards. The flag mast shall be located on the aft centerline of the floating deckhouse Upper Deck.

Radar antennas shall be mounted on masts that are designed and fabricated for a wind loading. For CLIN 0001, any radar antenna exceeding the maximum air-draft requirement shall be capable of being folded down to meet the height restriction.

C320 TANKS

A. CONTRACT DRAWING

CLIN 0001
557-B130-01, TANK CAPACITY PLAN

CLIN 0002, CLIN 0003 and CLIN 0004
556-B130-01, TANK CAPACITY PLAN

B. GENERAL

The towboats contain integral tanks that shall be located in accordance with the contract drawings. The tanks are the ballast tanks, fuel oil tanks, slop oil (waste oil), oily bilge, sewage holding, lube oil, gear oil, hydraulic oil and potable water tanks.

Capacities shall be as stated in Clause C130. Capacity tables shall be created for the tanks in accordance with Clause C130 of the contract.

Tanks shall be complete with manholes, access ladders, filling connections, sounding tubes, tank level indicators, drains, vents and all necessary connecting piping, gauges and controls as required by the various clauses of this contract.

All tanks shall be of welded steel construction, except the potable water tanks, which shall be of welded stainless steel construction. The tanks shall be designed and constructed to meet the applicable ABS rules.

Fuel oil storage tanks, forward fuel oil day tank and potable water tanks shall be fitted with double bottoms separating them from the bottom shell. The fuel oil and day tank shall be raised 30-inches above the bottom shell. The potable water tank bottoms shall be a minimum of 24” above the bottom shell and sloped to match the hull form. The inner bottoms shall be watertight at the watertight transverse compartment bulkheads and accessible through watertight manholes from both ends (refer to Clause C415.G).

The Contractor shall install an oil/water stop for any structure passing through an oil-tight or watertight boundary of an integral tank. The oil/water stop is installed to prevent liquid from transiting from the tank via the structural member passing through the tank and the common plate. The size and location of the oil/water stop shall be acceptable to ABS and shown on the structural and tank drawings. See Sketch #320A for typical oil/stop details.

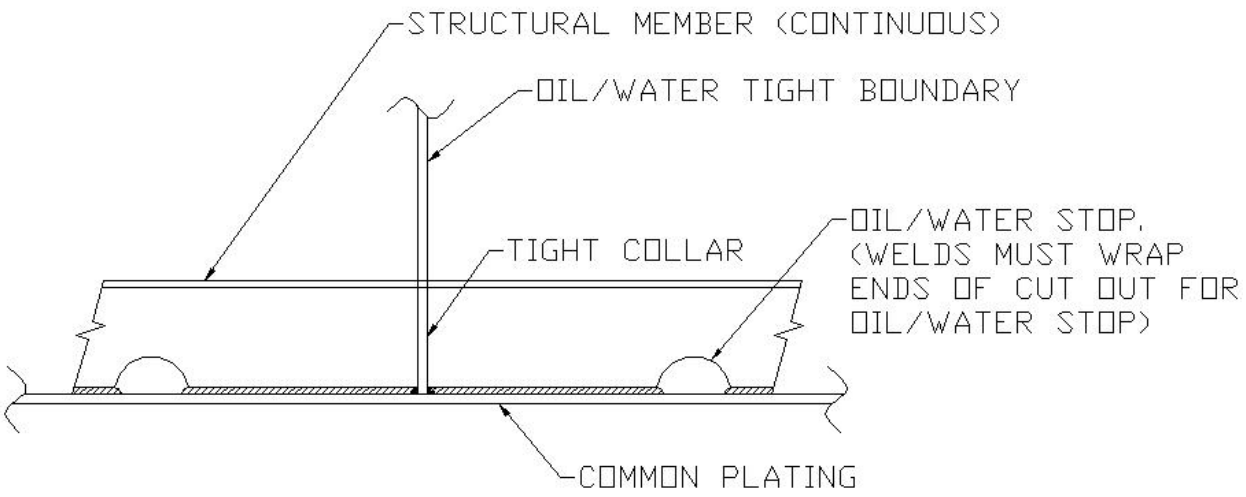

MDC SKETCH #320A, (TYPICAL OIL/WATER STOP DETAIL)

C. DESCRIPTION OF WORK

1. Ballast Tanks

The ballast tanks shall be located as shown on the contract drawings. However, the Contractor shall re-assess the need for all five tanks upon completion of the potable water tank design. Any ballast tanks deemed unnecessary at that time shall be converted to voids.

The forward ballast tank shall be fitted with a baffle in the fore and aft direction on centerline. The baffle shall be framed with flat bar stiffeners, and shall have 18-inch by 24-inch access openings, limber holes, and vent openings.

Each ballast tank shall be fitted with hatches in accordance with Clause C415 and access ladders in accordance with Clause C427. Vents, sounds, and fills shall be in accordance with Clause C660.

2. Fuel Oil Tanks

The vessels shall be constructed with main fuel oil tanks and fuel oil day tanks in the locations shown on the contract drawings. All fuel oil tanks shall be isolated from the side shell and bottom plating.

The fuel oil tanks' plating and framing shall be designed to ABS scantlings for deep tank bulkheads, tank tops, and bottoms.

The fuel oil tanks shall be fitted with hatches in accordance with Clause C415 and access ladders in accordance with Clause C427. Vents, sounds, and fills shall be in accordance with Clause C630.

3. Slop (Waste) Oil Tank & Oily Bilge Tank

The vessels shall be constructed with a slop (waste) oil tank and an oily bilge tank in the locations shown on the contract drawings. The tanks shall be constructed in the same manner as the main fuel oil tanks.

Each tank shall be fitted with hatches in accordance with Clause C415 and access ladders in accordance with Clause C427. Vents, sounds, and fills shall be in accordance with Clause C637 for the slop (waste) oil tank and in accordance with Clause C660 for the oily bilge tank.

4. Sewage Holding Tanks

The sewage holding tanks shall be located as shown on the contract drawings.

Each tank shall be fitted with hatches in accordance with Clause C415 and access ladders in accordance with Clause C427. Vents, sounds, and fills shall be in accordance with Clause C667.

5. Lube Oil Tank, Gear Oil Tank & Hydraulic Oil Tank

The lube oil tank, gear oil tank, and hydraulic oil tank shall be located as shown on the contract drawings. The tanks shall be constructed isolated from the bottom plating.

Each tank shall be fitted with hatches in accordance with Clause C415. Vents, sounds, and fills shall be in accordance with Clause C635.

6. Potable Water Tanks

The Contractor shall configure and design the potable water tanks at the start of the Engineering Phase of the contract. The tanks shall be located between bulkheads 4 and 15 and shall be clear of the capstan motors extending through the main deck. The total capacity of the potable water tanks shall be at least as much as stated in Clause C130.B. More capacity is preferred.

Welded, 304 stainless steel tanks shall be provided and installed for the potable water. The tank sides and bottom shall be isolated from the side shell and bottom plate of the vessel. The top of the tanks shall be the main deck. All the tank's connections, hatches and fittings shall also be of stainless steel. Structural stiffening interior to the tanks shall be of 304 stainless steel. Exterior stiffeners may be of mild steel if welded in accordance with ABS requirements for stainless steel to mild steel. Insert plates shall be used to tie the top of each stainless steel tank into the main deck.

Each tank shall be fitted with hatches in accordance with Clause C415 and access ladders in accordance with Clause C427. Vents, sounds, and fills shall be in accordance with Clause C665.

C325 SEA CHESTS

A. CONTRACT DRAWINGS

CLIN 0001
557-B245-01, HOLD & MACHINERY ARRANGEMENT

CLIN 0002, CLIN 0003 & CLIN 0004
556-B245-01, HOLD & MACHINERY ARRANGEMENT

B. DESCRIPTION OF WORK

Two sea chests shall be provided as shown on the Contract Drawings. The sea chests shall be sized to provide water to the fire system, and the ballast system.

The sea chests shall be fabricated of plate equal to or greater in thickness than the hull plating to which they are attached.

A removable, ½ inch copper-nickel strainer plate shall be bolted onto the hull opening for each sea chest. The strainer plates shall be secured with stainless steel fasteners and suitable insulated for dissimilar materials. Each strainer plate shall have an open area as required by ABS and shall be flush on the outboard side.

Extra strong pipe couplings shall be welded to each sea chest for attachment of piping. Each sea chest shall be equipped with a 2-inch vent. Provisions shall be made to allow closing of the vent in order to allow blow-down of each sea chest. Blown-down connections shall be installed in each sea chest in accordance with contract Clause C690.

C326 TRANSDUCER WELLS

A. REFERENCE DRAWING

518-D472-01, TRANSDUCER WELL

B. DESCRIPTION OF WORK

A transducer well shall be provided and installed for each of the two transducers to be installed for each vessel's depth sounder. The requirements for the depth sounder are in Clause C472.

The above reference drawing is provided for guidance in fabricating and installing the transducer wells. The final well pipe diameters shall be based upon the transducer selected for the depth sounder. The access hatches for each well are listed in contract Clause C415.

Should the transducer wells terminate under the floating deckhouse, provisions shall be made for providing access through the floating deck to allow for removal of each transducer from within the deckhouse.

C330 FOUNDATIONS

A. GENERAL

Suitable foundations shall be provided under all units of machinery, tanks, deck fittings, winches, and other heavy concentrations of weight to properly mount the item, to distribute the loads to the structure, and to avoid undue stresses and vibrations in the hull.

Foundations shall be fabricated from structural steel shapes and plates. Foundation members shall be lightened and openings provided to permit access to all parts of the foundation for inspection, drainage, and maintenance. Web plates of foundations shall be stiffened at holding-down bolts and other points of load concentration.

Bolting surfaces on foundations shall be made coplanar by the use of machined steel shims or poured-in type chocking material. Bolt holes in foundations shall be templated from the unit.

Foundation top flanges/plates shall be level.

All equipment bolted to foundations shall have mounting bolt holes accurately bored (not burned) and reamed to provide a no-slop fit.

The threaded portion of the bolts shall be clear of the foundation or equipment pads, and heavy flat and lock washers used under all nuts. Elastic stop nuts may be substituted for lock washers.

Where dripping of water or oil can be expected, the top plates of foundations shall be tight and project slightly beyond the edges of bedplates or bases of units to be supported. Flat bar shall be seal-welded around the edges of the top plates to retain any leakage of oil or water and quick disconnect fittings provided for drainage.

B. FASTENERS

Unless otherwise specified by the manufacturer, Grade #8 fasteners shall be used for all bolted connections and equipment and machinery holddowns. The threaded portion of bolts shall be clear of the foundation or equipment pads, and heavy flat and lock washers used under all nuts. Elastic stop nuts may be substituted for lock washers.

C400 OUTFIT

C406 COATING SYSTEM

A. SURFACE PREPARATION

Surface preparation for all structural steel shall be in accordance with Steel Structures Painting Council Standards, SSPC-SP10-85 (Near White Metal Blast) throughout. Profile after blasting shall be 1-1/2 to 2-1/2 mils in depth and jagged. All mill scale, weld spatter, dirt, oil, and grease shall be removed.

Immediately upon completion of surface preparation, all steel shall be coated with the coating system described in the following.

Contractor may limit initial coating to base coat only. In this case, or where preconstruction primer is used prior to application of subsequent coats, all steel shall be either water blasted or sand-swept clean (light blast) and any damaged areas repaired prior to application of the remainder of the system. All areas needing repair shall be cleaned to bare metal, spot blasted to restore profile, and re-coated with the base coat.

B. PAINT REQUIREMENTS

Paint shall be delivered in sealed containers with labels to indicate manufacturer, contents, and any special instructions. Paints and painting materials shall be stored under cover and protected from extreme temperatures.

Paints shall not be used if they have exceeded the closed shelf life or pot life recommended by the manufacturer. Additionally, paints shall not be applied in weather or humidity conditions not recommended by the manufacturer.

C. APPLICATION OF COATINGS

Surface preparation and paint application shall be in strict compliance with the coating manufacturer's recommendations. The Contractor shall take particular care to insure that coating system requirements are met in all areas, especially those difficult to coat, such as flange undersides. All painting on both the interior and exterior surfaces below the main deck shall be accomplished prior to launching of the vessel.

D. COATING SYSTEM

The system is composed of the following coating types:

- self priming epoxy base coat
- abrasion resistant epoxy barrier coat
- fade resistant urethane top coat

A Paint Schedule shall be developed and submitted to MDC during the Engineering Phase of the contract.

E. PRE-QUALIFIED COATINGS

Coating systems from Ameron, BLP Mobile, and International Paint have been pre-qualified for the system above. The Contractor may select any of these systems at his discretion. However, systems may not be "mixed" (i.e. mixing an "a" with a "b" is not acceptable). The specific coating designations to be used are as follows:

- Surface Tolerant Base Coat
  - a. Ameron Amercoat 370
  - b. Amercoat 235 (formerly Devoe Bar Rust 235)
  - c. BLP Mobile MOPOXY-PLUS
  - d. International INTERTUF 262

- Abrasion Resistant Epoxy Barrier Coat
  - a. Ameron Amerlock 400GF
  - b. Amercoat 238 (formerly Devoe Devguard 238)
  - c. BLP Mobile MOPOXY-PLUS FG
  - d. International INTERSHIELD 350

- Fade Resistant Urethane Top Coat
  - a. Ameron Amercoat 450 HS
  - b. Amercoat 369 (formerly Devoe Devthane 369)
  - c. BLP Mobile MOTHANE HS-900
  - d. International INTERTHANE 990 HS

F. NUMBER OF COATS

The number of coats is not specified. The Contractor is required to provide the number of coats necessary to attain the DFT thicknesses required in the schedule below. Thickness applied per coat may not exceed the manufacturer's recommended maximum thickness. Each coat shall be listed in the Paint Schedule.

G. COATING "TYPE" AND DFT SCHEDULE

All areas of the each vessel shall be coated in accordance with the following schedule:

1. Hull Exterior (below the main deck)

All steel surfaces shall be coated with base coat at 8 mils DFT minimum.

All surfaces shall be overcoated (over the base coat) with barrier coat at 12 mils DFT minimum (not including base coat).

Exterior surfaces of rudders and the interior of each sea chest shall be coated in the same manner as the hull exterior. The interior surfaces of the rudders shall not be coated.

Lettering and numerals on the hull exterior shall be overcoated (over the barrier coat) with top coat at 2 mils DFT minimum.

The base coat and the barrier coat shall both be the same color.

2. Main Deck and Top of the Towknees

All steel surfaces shall be coated with a base coat at 8 mils DFT minimum.

All surfaces shall be overcoated (over the base coat) with barrier coat at 12 mils DFT minimum (not including the base coat).

Non-skid garnet additive shall be added to the barrier coat.

Deck area shall be overcoated (over the barrier coat and non-skid garnet) with top coat at 4 mils DFT minimum.

3. Deck Fittings

All deck fittings shall receive a base coat at 5 mils DFT minimum and be overcoated (over the base coat) with a barrier coat at 5 mils DFT minimum. A top coat at 2 mils DFT minimum shall overcoat the barrier coat.

4. Hull Interior and Deckhouse Spring Void

Steel surfaces within the hull include the ballast tanks, voids, sewage holding tanks, oily bilge tank, forward storage space, machinery

rooms, shaft alley and deckhouse spring void. The interior of the towknees, interior of spill containments and exterior of sea chests shall also be considered hull interior for coating purposes.

All steel surfaces within the hull, with the exception of the interior of fuel tanks, lube and gear oil tanks, slop (waste oil) tank, and potable water tanks, shall be coated with base coat at 8 mils DFT minimum.

5. Fuel Oil Tanks, Slop (Waste Oil) Tank, Lube & Gear Oil Tanks

The interior surfaces of these tanks shall be maintained with a coat of mineral oil applied immediately following the surface preparation.

The exterior surface of these tanks shall be coated the same as the hull interior except those tank exteriors which are the interior of others of these tanks.

6. Hydraulic Oil Tank

The interior surface of the hydraulic oil tank shall be maintained with a coat of hydraulic oil applied immediately following surface preparation.

The exterior surface of the tank shall be coated the same at the hull interior.

7. Potable Water Tanks

Potable water tanks are stainless steel and shall not be coated.

8. Exterior Decks (Above the Main Deck)

The following exterior surfaces are considered exterior decks and shall be painted accordingly: upper deck, Texas deck (CLIN 0002, CLIN 0003 and CLIN 0004), aft deck of the electric plenum (CLIN 0002, CLIN 0003 and CLIN 0004), pilothouse deck and pilothouse top.

All steel surfaces shall be coated with base coat at 12 mils DFT minimum.

Non-skid garnet additive shall be added to the last base coat.

Deck areas shall be overcoated (over the base coat and non-skid garnet) with top coat at 4 mils DFT minimum.

9. Exterior Deckhouse, Towknee, and Stack Exterior and Railings

The deckhouse, towknee and stack exteriors and the hand railings shall be coated with a base coat at 8 mils DFT minimum.

All steel surfaces shall be overcoated (over the base coat) with a top coat at 4 mils DFT minimum.

10. Interior Deckhouse

All steel deckhouse interior shall be coated with a base coat at 8 mils DFT minimum.

11. Interior Decks

Interior decks not receiving a deck covering (Clause C430) shall be coated with a base coat at 8 mils DFT minimum.

These decks shall be overcoated (over the base coat) with a top coat at 2 mils DFT minimum.

H. COATING COLOR SCHEDULE

Colors shall conform to Federal Standard 595a(3) Colors Identification Numbers. Color chips (3" x 5") may be produced from the General Services Administration/Specifications Section as follows:

GSA/FSS/Specification Section
470 L'Enfant Plaza East SW, Suite 8100
Washington, DC 20407

Phone: (202) 619-8925
FAX: (202) 619-8978

The coloring schedule shall be as follows:

AREA	COLOR/FS595 NUMBER
• Hull Exterior	Black/17038
• Deckhouse Exterior	Old Ivory/17855
• Exterior Deck Coaming	Deck Red/17855
• Main Deck	Deck Red/10076
• Exterior Decks (Above Main Dk.)	Lt. Grey/16515
• Pilothouse Top	Lt. Grey/16515
• Housetop	Deck Red/10076
• Hull Interior	Grey/16473
• Tanks & Voids	Grey/16473
• Upper Machinery Space	Grey/16473

• Generator & Steering Gear Rooms	Grey/16473
• Deckhouse Interiors	White/27880
• Interior Decks	Grey/16473
• Deckhouse Spring Void	Lt. Grey/16515
• Towknee Exterior	Black/17038
• Towknee Interior	Lt. Grey/16515
• Stacks	Black/17038
• Stack Band (behind Castle)	Red/11136
• Communications Mark Base Plate	Red/11136
• Stack Trim Bands (T/B Castle)	Silver/17178
• Deck Fittings	Yellow/13655
• Masts	Old Ivory/17855
• Hull Markings	White/27880
• Handrails & Stair Rails	Black/17038
• Signature	Black/17038
• Name Board Letters	Gold/23594
• Name Board Background	Blue/25102

On deck areas, both under coat (barrier coat for hull and base coat for deck other than hull) and topcoat shall be the same color.

On exterior hull areas, both the base coat and the barrier coat shall be the same color.

All top coating shall be thick enough to provide complete opaque color coverage. Thickness increased over the DFT minimums required above shall be provided if required for opaque color coverage.

All items of machinery and equipment shall be painted with the individual manufacturer's standard colors. Painted surfaces damaged in handling and installing the equipment shall be repainted.

All unpainted machinery items having black cast or carbon steel surfaces shall be given a prime coat and finish coat of gray machinery enamel.

I. FINAL INSPECTION OF PAINTING

The Contractor is responsible for delivering the vessels with all painted surfaces in sound condition, and in accordance with this specification.

Prior to launching of the vessels, all interior and exterior painting shall be thoroughly inspected. If there are any defects or damage in the coating of either vessel, the Contractor shall, as necessary, repair the coating to restore the integrity of the paint system, and to meet the requirements of this specification. All damage shall be cleaned

to bare metal, spot blasted to restore profile, and re-coated with the entire system schedule.

Each vessel shall not be launched until:

- The painting warranty and documentation as required in paragraph I above has been provided to MDC. The warranty and documentation must show compliance with this specification in all areas, and all readings taken.

- The painting has been inspected by an MDC representative. Contractor must provide warranty and documentation prior to MDC inspection.

If outfitting is required after launching, all interior and exterior painting shall be re-inspected prior to Provisional Acceptance, and any damaged areas of the coating shall be repaired by the Contractor as necessary to restore the integrity of the paint system.

Any additional painting required as a result of the Final Inspection shall be done as required to meet this specification at no additional cost to the Government.

J. DOCUMENTATION AND WARRANTY

1. Documentation

For each vessel, the Contractor shall provide a written signed statement from the paint manufacturer certifying that all coating application and surface preparation are in accordance with the coating system manufacturer's requirements, and that the coating application meet all requirements in this specification.

The Contractor shall provide documentation logs for each coating applied. The logs shall include the following parameters:

a. Coating (per specification) type.

b. Coating manufacturer's requirements for preparation, environmental conditions and application.

c. Date and time of preparation and application.

d. Extent and location of area coated.

e. Surface: preparation, condition at time of coating, temperature at time of coating, dew point at time of coating.

f. DFT measurements for each applied coating type. Measurements shall be taken as follows:

- all flat surfaces, one reading per every 200 square feet, uniformly distributed.
- undersides of all flanges, one reading per every 50 linear feet of flange, uniformly distributed.
- all free standing structural members, i.e. stanchions, truss diagonals, etc., one reading per 50 linear feet of length each surface, but a minimum of two readings per surface.

Wet film measurements may be taken and converted to DFT as an alternative to direct DFT. In areas where multiple coating types are required, the above DFT requirements are applied to each coating type.

g. Services provided by paint manufacturer's representative (i.e. DFT readings, dew point, etc.), if present during application.

h. Signature of paint manufacturer's representative on site, if present.

2. Warranty

For each vessel, the Contractor shall warranty the coating system for one calendar year, commencing at final acceptance. The Contractor shall repair any coating failures during this time period at his cost.

K. SAFETY AND HEALTH STANDARDS

The U.S. Occupational Safety and Health Administration Regulations(OSHA) for shipyard employees engaged in surface preparation and coatings application shall be in accordance with the OSHA regulations stated in 29 CFR, subpart C.

These regulations require the Contractor to have access to a "competent person" to test compartment atmosphere quality. The "competent person" shall be in accordance with OSHA regulations, stated in 29 CFR, subpart A, 1915.7.

The regulations also require that frequent testing of the atmosphere shall be made in compartments being coated or preserved (or prepared for coating or preservation) by paints and coatings dissolved in highly volatile, toxic and flammable solvents (29 CFR, subpart C, 1915.35(b)), to ensure the atmosphere is not hazardous.

Each compartment inspection and test shall be logged on OSHA Form 74, with instructions on how to maintain a safe atmosphere in these spaces until the completion of the contract.

On 24-hours notice of any Government inspection, and before any representative of the U.S. Government boards the vessel for inspection, each enclosed or confined space to be inspected shall be labeled "Safe for Workers" in accordance with the OSHA regulations stated in 29 CFR 1915.31-36. The initial certificate shall be issued by a National Fire Protection Association (NFPA) certified Marine Chemist. A competent person may re-certify daily provided that the conditions have been maintained.

This means that in all spaces so designated:

- The oxygen content of the atmosphere is at least 19.5 percent and below 22 percent by volume;
- The concentration of flammable vapors is below 10 percent of the lower explosive limit (LEL);
- Any toxic materials in the atmosphere are within permissible concentrations;
- Any residues or materials associated with any work in the space will not produce uncontrolled release of toxic materials under existing atmospheric conditions while maintained as directed.

The Contractor shall notify the Government when this certificate has been issued for each compartment and tank. The vessel will not be inspected and accepted by the Government without a NFPA Marine Chemist certificate for each compartment designated "Safe for Workers."

C410 HULL OUTFIT

A. DRAWINGS

CLIN 0001

Contract Drawing #557-B105-01, LINES PLAN
Contract Drawing #557-B215-01, GENERAL ARRANGEMENT
Contract Drawing #557-B301-02, INBOARD PROFILE

CLIN 0002, CLIN 0003 & CLIN 0004
Contract Drawing #556-B105-01, LINES PLAN
Contract Drawing #556-B215-01, GENERAL ARRANGEMENT
Contract Drawing #556-B301-02, INBOARD PROFILE
Reference Drawing #518-D410-02, RUBBER FENDERING

A. TOWKNEES

Two towknees with steps leading up their aft sides to the towknee top shall be provided and installed at the bow as shown on the Contract Drawings. The outboard edge of each towknee shall be 26' from the opposite side at midship. The towknees shall be designed and installed integral with the hull structure and shall not extend forward of the headlog.

Each towknee shall be faced with replaceable hard rubber pads (similar to Trellex Morse part number E42010 or E42034) securely bonded to 1/2" steel plate. The towknees shall be width shall be as shown on the contract drawings.

The towknees shall include interior storage space at the main deck level. The space shall be made watertight and fitted with a watertight, hinged door similar to CEN-TEX, drawing No.100 on the inboard side of each towknee.

On the outboard side of each towknee, two 6-inch half-button chocks shall be installed in order to hang face wires. The mounting locations of the half-buttons above the deck shall be determined during the construction phase.

The towknees shall be fitted with railings along the steps in accordance with Clause C425, grab rails on the outboard sides in accordance with Clause C425, and vertical bar rungs on their inboard side in accordance with Clause C427.

B. RUB RAILS

Two rub rails shall be provided and installed on the sides and across the stern of each vessel. The lower rail shall be just above the designed full load waterline. The upper rail shall be half way from the lower rail to the deck edge.

The bow corners shall have rounded towknee type strips similar to Trellex Morse E42049. Effort shall be made to align the side shell rub rails with the forward corner rub rails. The aft corners shall be protected with single layer laminated stern fenders similar to those produced by the Schuyler Rubber Company.

Tow tiers of towknee bumpers similar to those applied to the face of the towknees shall be welded to the headlog between the towknees.

Pittsburgh District Towboat (CLIN 0001)

The Contractor shall provide and install 8-inch extra heavy steel half pipe. The pipe shall be tapered with welded caps at its ends. The half-pipe shall be continuously welded to 10" x 1" steel plate with chamfered edges (1/2" on each facing edge at 45 degrees) which shall be continuously welded to the shell.

Huntington District Towboat (CLIN 0002), St. Paul District Towboat (CLIN 0003) & Rock Island District Towboat (CLIN 0004)

The Contractor shall provide and install two rows of rubber "D" type bumpers approximately 8" deep by 8" wide with 3" bore similar to Trellex Morse "D" SHAPE - "O" BORE EXTRUSION F9-5000 along each side of the hull and across the stern. The top of the top rail shall be positioned 3" below the deck edge. Installation of the D-rails shall be in accordance with the Referenced Drawing.

C. SPLASH PLATE

There shall be no splash plates on any vessel. However, CLIN 0001 shall have installed a vertical channel welded on the inboard side of each towknee at the headlog to accommodate timbers for possible future use as a slash plate. Timbers 2" thick shall be assumed for sizing the channel.

D. H-BITTS

A single H-bitt constructed of steel pipe shall be provided and installed on the Main Deck 5' aft of the bow on the centerline.

The bitt shall be constructed of 10 inch schedule 40 steel pipe verticals (spaced 24" center-to-center), with a 5 inch schedule 40 steel pipe cross bar (centered 9" below the top of the vertical pipe). The bitt shall be 24 inches high (overall above the deck) by 54 inches in width. The pipe ends shall be sealed.

The vertical members of the bitt shall extend continuously through the main deck and down to the bottom shell and shall be bracketed and integrated into the hull structure. The bitt shall pass through an insert plate in the main deck and land on an insert plate in the bottom plating. The insert plate shall be at least 1/8-inch thicker than the surrounding plate.

E. CHAFING BAR

A chafing bar shall be installed along the bow deck edge. The bar shall consist of a 1" diameter stainless steel round bar continuously welded to the deck edge from Frame #31 forward to the towknee and continue 30" up the towknee forward outboard edge.

F. ROPE GUARD

A guard shall be provided at the outboard forward floating deckhouse corners. A rounded steel plate with a rounded corner edge shall be installed vertically at the corner. The plate shall be constructed of stainless steel for CLIN 0001 and mild steel for CLIN 0002, CLIN 0003, and CLIN 0004. This plate shall extend from the main deck up 30 inches and be fully supported structurally to withstand a 1" wire rope running against it from any deck equipment. The plate shall be of welded construction and not interfere with the movement of the floating deckhouse.

C415 DOORS, WINDOWS, HATCHES AND MANHOLES

A. CONTRACT DRAWINGS

CLIN 0001
557-B205-01, OUTBOARD PROFILE
557-B215-01, GENERAL ARRANGEMENT
557-B233-01, PILOTHOUSE DETAILS
557-B245-01, HOLD & MACHINERY ARRANGEMENT

CLIN 0002, CLIN 0003 & CLIN 0004
556-B205-01, OUTBOARD PROFILE
556-B215-01, GENERAL ARRANGEMENT
556-B233-01, PILOTHOUSE DETAILS
556-B245-01, HOLD & MACHINERY ARRANGEMENT

B. GENERAL

Doors, windows, hatches and manholes shall generally be located as shown on the contract drawings.

All door, window, hatch, and manhole openings shall be provided with headers and framing as necessary to transfer the hull and local structural stresses around the openings. The headers shall be shown on the structural drawings. The structural requirements are in Section C300.

C. DOORS

All doors shall be equipped with handles inside and outside and a door stop. All hardware shall be stainless steel. All doors shall be 6'-8" high (unless noted otherwise). Frames shall be provided for each door appropriate to the service intended.

1. Exterior Doors

All exterior doors shall be sized with swing as noted on the Contract Drawings. The doors (except the plenum/electronics space of CLIN 0002, CLIN 0003 & CLIN 0004) shall be weathertight, stainless steel, solid core, spring-loaded rubber seals, and piano hinged similar to the OMEGA Products Inc. standard door. The doors shall be completely seal welded at the top to prevent rain entering inside the core and corroding the door from the inside out. All main deck doors without stairs shall have a minimum 6-inch sill, however the sill shall be sized in accordance with Clause C155.A. All other exterior doors shall have 2-inch sills. Doors not located under the roof overhang shall have a flat bar or other device to shield the top of the door from rainwater. The doors shall be fitted with wire mesh safety glass (minimum 18" x 24"), except the pilothouse doors shall have 18" x 36" fixed lights set 42" above the deck. All exterior doors shall be fitted with automatic closures except the double doors and the door into the electronics/plenum space (CLIN 0002, CLIN 0003 & CLIN 0004). Door handles shall be lever type opening downward.

The door to the electronics/plenum half-space (CLIN 0002, CLIN 0003 & CLIN 0004) shall be 36" wide x 42" high, hinged to open into the space. The door shall be fitted with a 12" x 12" fixed wired safety glass and a 2" sill shall be provided. The door shall be double panel, hollow steel (steel to be a minimum of 16 gauge) fitted with a minimum of three hinges and intended for marine weathertight service. This door shall have lock and hardware the same as all other exterior doors.

2. Watertight Doors

The lower engine room shall be accessible to the shaft alley and the forward machinery space through steel, quick acting sliding dog type, 6-dogged, watertight doors. These doors shall meet ABS requirements to preserve the tightness of the adjacent bulkhead and shall be certified by ABS. The clear opening of these doors shall be no less than 28" x 60" with 6 inch radius corners. The bottom of each door shall be 6" above the floor plates on either side of the opening. Each door shall be fitted with a door alarm as required by contract Clause C692.

3. Fume Tight Doors

Fume tight doors shall be fitted at the exits from the upper machinery space to the floating deckhouse (one each side of the void), generator room and engineer's workshop; from the steering gear room forward within the deckhouse; at each stairwell landing; at each plenum closet; and the three doors surrounding the stairwell at the upper deck (CLIN 0001). Swing and sizes shall be as shown on the Contract Drawings.

Fume tight doors shall be fitted with a minimum of three hinges, automatic closures, and the door handles shall be the lever type opening downward. Each fume tight door shall be fitted with a 12" x 12" wired safety light. Sills shall be sized to suit manufacturer's recommendations but shall not be less than 2".

Fume tight doors adjacent to machinery spaces shall be fired rated.

No fume tight door shall be fitted with any type of lock.

4. Interior Doors

Each interior door shall be double panel, hollow steel (steel to be a minimum of 16 gauge) fitted with a minimum of three hinges and intended for marine use. All doors shall be standard 6'-8" high with width and swing as shown on the Contract Drawings. Door handles shall be knob type. Sills shall be as necessary to fit doors in accordance with manufacturer's recommendations or as noted herein.

Each toilet space door shall be fitted with louvered bottom. A 2" sill shall be provided at each toilet space door.

5. Locks and Keys

All locks shall have interchangeable cores, designed as a system and procured from a single manufacturer. The lock system shall be designed on a "grand master" and "master" basis similar to that of the Best Lock Corporation. The grand master shall open all locks on the vessel. The "grand master" key of one vessel shall not provide access to any other vessel under this contract.

All exterior doors shall be fitted with mortise cylinder locks (common key) with latch bolt and dead bolt. The dead bolt shall operate by key from both sides.

For privacy, the toilet space doors shall be fitted with provisions for latching the door from the inside of the space. This latch shall be releasable from the outside in an emergency.

Stateroom, pantry, stairwell closets, and office doors shall be fitted with locks and keyed differently. Each lock shall be a mortise cylinder lock with a dead bolt. The dead bolt shall operate by key from the outside and latch from the inside. Additionally, the staterooms shall have suitable privacy latches (not slip bolts) matching the deadbolt hardware and operable from the inside.

Personnel lockers and drawers within staterooms shall be provided with locks to secure each crewpersons personal effects. Each locker and drawer set shall be keyed alike. Each "set" shall be keyed differently.

A lock shall also be provided for the storage room within the office (CLIN 0001). This lock shall be a mortise cylinder lock with a dead bolt. The dead bolt shall operate by key from the outside and latch from the inside.

The door separating the deck storage room from the rest of the floating deckhouse shall be fitted with a mortise cylinder lock with latch bolt and dead bolt. The dead bolt shall operate by key from both sides.

One each vessel, six "grand master" keys shall be provided to open all doors.

Master keys shall be provided as follows:

- Machinery spaces, plenum closets and the electronics/plenum space (CLIN 0002, CLIN 0003 & CLIN 0004) - all doors associated with the upper machinery space, engineer's workshop, steering gear room, plenum closets on each deck, deck storage room, and the electronic/plenum room (CLIN 0002, CLIN 0003 & CLIN 0004).

- Galley - all doors associated with the galley, pantry, stairwell closets, and laundry (CLIN 0002, CLIN 0003 & CLIN 0004).

- Staterooms - all doors associated with staterooms, except the personnel lockers.

- Personnel Lockers and Drawers - all lockers and drawers within staterooms.

Two keys shall be furnished for each lock and 10 blank keys of each type fitted. Two "grand master" keys and two of each "master" key shall be provided. All keys shall be tagged with brass tags and numbered.

A locking wall mounted key cabinet shall be located in the office. This cabinet shall be large enough to store keys for each space, plus each master and the grand master on separate hooks.

D. WINDOWS

All windows shall be 1/4-inch thick safety glass. All windows shall be of the same manufacturer to provide consistent styling, function and ease of repair. All windows shall be supplied with radius corners.

The glass shall be set in neoprene glazing with extruded aluminum frames, which are clipped or bolted into the deckhouse structure in accordance with the manufacturer's recommendations.

Except the center forward pilothouse window, aluminum framed insect screens with stainless steel mesh shall be provided for all opening windows. Screens shall be fitted into a track incorporated into the window frame.

1. Aft Deckhouse & Floating Deckhouse

All deckhouse windows, except the pilothouse, shall have medium tint. Windows shall be generally located as shown on the Contract Drawings. Windows shall be of the horizontal sliding type with the aft panel opening. Mini-blinds shall be provided and installed on all deckhouse windows except the pilothouse. General sizing for all windows shall be 30" wide by 24" high.

2. Pilothouse

The pilothouse shall have windows all around for maximum visibility. The windows shall have radius corners and shall be of clear glass. The forward and aft windows shall slope inward at their base to prevent glare. The front center windows shall be three across. The center forward window shall open inward and hinge up with a latch to secure it in the open position to the overhead. All other pilothouse windows shall be fixed. Mullions between pilothouse windows shall be minimum width possible to reduce visibility obstruction. The tops of the windows shall be 6' - 6" above the deck with a minimum projected height of 36".

Independently operated windshield wipers shall be supplied and installed for the pilothouse windows as follows:

- Forward, centerline, and port and starboard corner windows shall be fitted with a single blade, straight-line window wiper similar to a WYNN, Type "C." The wipers shall be sized to cover as much window area as possible without the blades touching the mullions. A two speed AC motor (radio suppressed) shall be supplied for each wiper. Each wiper unit shall come with a park sensor.

- The forward, port and starboard windows and the aft centerline window shall each be fitted with a single blade pendulum type wiper similar to a WYNN, type 1602S, standard duty wiper. Each wiper shall be sized to cover as much window area as possible without the blades touching the mullions. A single speed AC motor (radio suppressed) shall be supplied for each wiper.

An electric fan for defrosting the windows shall be mounted at the five forward-most windows and at the aft center window. The fans shall be adjustable, low speed, with steel fan guards.

The wiper and fan controls shall be mounted on or in the console within comfortable reach of the operator. The position of the controls shall be determined during the construction phase.

The pilothouse windows shall all have see-through dark smoke colored shades, mounted on clutch spring-less rollers.

3. Engineer's Workshop Window

The window between the engineer's workshop and the upper machinery space shall be a fire rated window. The window shall be approximately 36" wide x 24" high and fixed.

E. STORAGE HATCH

A 36" x 36" square clear opening watertight ABS grade hatch with a 6-inch coaming shall be installed on the main deck forward of the floating deckhouse to provide access to the forward storage space in the hull. The hatch shall have a spring balanced cover similar to CEN-TEX Marine, drawing No. 214.

F. EMERGENCY ESCAPE HATCHES

An emergency, flush, steel, hinged, ABS grade watertight hatch with a 20-inch clear opening (similar to CEN-TEX Marine Drawing No. 401) shall be fitted in the main deck outboard of the deckhouse in way of the forward machinery space and shaft alley. Each emergency hatch shall have a stainless steel "T" type handle and round bar shaft with an escape wheel type handle attached to the underside of the hatch.

G. MANHOLES

The manholes in the main deck shall be located generally as shown on the Contract Drawings.

Each hull compartment having access through the main deck shall be fitted with 24 inch manholes. These manholes shall be ABS grade aluminum cover with steel ring, flush, round, and watertight similar to FREEMAN Flush Watertight Hatch Model 24AMSR. A 5/16" galvanized steel chain shall be attached to the hatch cover and the under side of the deck to secure the cover from loss when open. Care shall be taken to isolate the steel chain from the aluminum cover.

Clean-out manholes shall be provided and installed in all oil tanks. The hatches shall be raised, bolted, oil tight hatches similar to NABRICO model DF-154-18, with a clear opening of 18". The hatches shall be located on the side of the tank where there is room for access to the tank interior. Each hatch shall be supplied with gaskets suitable for the respective oil service of that tank.

Fuel oil storage and day tanks shall be accessed through oil tight, raised, bolted plate manholes similar to CEN-TEX drawing No.302. these oblong hatches shall have a clear opening of 15" x 23". Each hatch shall be supplied with gaskets suitable for fuel oil service. The hatches shall be located on the sides, toward the top of the tank where there is room for access to the tank interior. The fuel oil storage tanks and forward day tank shall be fitted with two such manholes arranged at opposite ends of the tank.

Each potable water tank shall be accessed through a raised, bolted plate, watertight clean-out hatch. The hatches shall be fabricated of the same material as the tank bulkhead plating. The hatches shall be square, with 18" x 18" clear opening. The hatches shall be located on the side near the top of the tanks where there is room for access to the tank interior. On the opposite diagonal end of each potable water tank a raised, bolted plate, watertight clean-out hatch 12" x 12" clear opening shall be installed to assist in cleaning and gas freeing each potable water tank. The hatches shall be fabricated of the same material as the tanks.

All hatches for the potable water tanks shall be outfitted with gaskets meeting the requirements of USPHS/FDA for potable water service.

H. TRANSDUCER WELL HATCHES

A bolted hatch similar to BAYWOOD model B-189 shall be provided and installed at the main deck for each transducer well (refer to Clause C326).

C420 DECK FITTINGS

A. CONTRACT DRAWINGS

CLIN 0001
557-B215-01, GENERAL ARRANGEMENT

CLIN 0002, CLIN 0003 & CLIN 0004
556-B215-01, GENERAL ARRANGEMENT

B. KEVELS

Kevels shall generally be located as shown on the Contract Drawings. Kevels shall be 36-inch cast steel of the open type with smooth formed openings similar to NABRICO DF-482. Kevels with plate edges in openings are not acceptable. Kevels shall be continuously welded to deck insert plates that are at least 1/8-inch thicker than the surrounding deck plate.

C. ROLLER BUTTON CHOCKS

Roller button chocks shall be provided and installed as shown on the Contract Drawings. CLIN 0001 shall be equipped with 8 - roller button chocks, four port and four starboard in the foredeck area. CLIN 0002, CLIN 0003 and CLIN 0004 shall be equipped with 6 - roller button chocks, three port and three starboard in the foredeck area.

Roller button chocks shall be 15-inch roller type similar to BLACKBURN model RB-100 for use with 1” diameter wire rope.

The roller chocks shall be mounted on foundations that angle the rope payout upward for use with floating plant and docks whose fittings are higher that the deck of this vessel. The foundations shall be welded to deck insert plates that are at least 1/8 inch thicker than the surrounding deck plate and supported under the main deck with headers and brackets as necessary to assure the load will be transferred to the main hull structure.

D. BUTTON CHOCKS

Fixed button chocks shall be provided and installed as shown on the Contract Drawings. The chocks shall be single 10-inch cast steel button chock, similar to NABRICO DF-185. Button chocks shall be located on top of each towknee and at each deck corner for a total of six chocks per vessel.

The button chocks shall be welded to deck insert plates that are at least 1/8 inch thicker than the surrounding deck plate and supported below the deck or towknee top plate with headers and brackets as necessary to assure the line loading will be transferred to the main hull structure.

C425 WALKWAYS, RAILINGS, GRATINGS AND FLOOR PLATES

A. DRAWINGS

CLIN 0001

Contract Drawing #557-B205-01, OUTBOARD PROFILE
Contract Drawing #557-B215-01, GENERAL ARRANGEMENT
Contract Drawing #557-B233-01, PILOTHOUSE ARRANGEMENT
Contract Drawing #557-B245-01, HOLD & MACHINERY ARRANGEMENT
Contract Drawing #557-B301-01, INBOARD PROFILE
Reference Drawing #577-D425-01, HANDRAILS, GRATINGS & WALKWAYS

CLIN 0002, CLIN 0003 & CLIN 0004

Contract Drawing #556-B205-01, OUTBOARD PROFILE
Contract Drawing #556-B215-01, GENERAL ARRANGEMENT
Contract Drawing #556-B233-01, PILOTHOUSE ARRANGEMENT
Contract Drawing #556-B245-01, HOLD & MACHINERY ARRANGEMENT
Contract Drawing #556-B301-01, INBOARD PROFILE
Reference Drawing #577-D425-01, HANDRAILS, GRATINGS & WALKWAYS

B. WALKWAYS

A minimum 33-inch clear walkway (clear of handrails and grab rails) shall be provided along each side of each level of the deckhouse above the main deck as shown on the Contract Drawings. The walkway shall be extended around the forward side of the deckhouse extending from side to side at each level. Each deck at each side shall have a 3-foot length of walkway (measured longitudinally) extend to the vessel side for access to other vessels and marine structures. The walkway at the forward side of the pilothouse deck (CLIN 0001), in way of the center front three windows, and forward side of the electronics/plenum deck (CLIN 0002, CLIN 0003 & CLIN 0004) shall be constructed of an open type grating as described elsewhere in this Clause.

The walkway along side the deckhouse at the main deck shall be no less than 30-inches clear walkway (clear of grab rails and handrails) inboard of the kevels.

Walkways above the main deck shall be constructed of welded steel. The outer edge of the walkway shall have a flat bar coaming extending 2 inches above the walkway plate to trap rain water. A similar coaming shall be installed at all ladder openings and all other openings in the walkway.

C. RAILINGS

1. Main Deck

Provide and install grab rails around the entire deckhouse. The grab rails shall be 1-1/2 inch mild steel square tubing with 3/16" wall thickness supported every 6 feet and positioned 34 inches above the deck. The clearance between the grab rail and the bulkhead shall be 3 inches. Grab rails shall also be provided on the outboard side of each towknee.

A suspended swing-away chain rail shall be installed outboard of the main deck deckhouse, port and starboard from Frame 13 to Frame 60. Reference Drawing 577-D425-01 is provided for guidance.

The 1/4-inch stainless steel vertical chains shall be located on approximately 6-foot centers, attached at the top to swing arms, and at the deck to tension springs and quick release hooks. Each hook shall clip to padeye welded to the deck. Each swing arm shall extend outward to permit clear passage for a 6-foot person. The verticals shall be positioned in order to not interfere with the deck fittings.

The 3/16-inch stainless steel horizontal chain railings shall pass through rings on the verticals and shall be fastened at both ends with safety snap hooks. The railing shall be 42 inches high and shall have a second course 20" above the deck.

A single portable 3/16-inch stainless steel safety chain shall be installed from the upper forward horizontal tier of the chain rail system forward to the aft outboard edge of the towknee and between each towing knee at the headlog. Each end of each chain shall be secured with a safety snap hook. Steel staples shall be welded to the towknee to secure the chain 42" above the deck. An additional staple shall be welded to the corner of the deckhouse to provide alternate method of support if the swing-away chain railing is removed. A single removable stanchion shall be provided between the kevel and the first roller chock near the deck edge to support the forward deck safety chain rail. The chain shall pass through a steel staple welded to the stanchion. The stanchion shall be temporarily connected to the main deck by way of a socket in the main deck. The socket shall be of stainless steel and have walls as thick as the surrounding deck plate. The socket shall be provided with a plug for use when the stanchion is not in use.

Provide and install a portable two-tier chain handrail across the transom extending forward to the swing-away chain rail, port and starboard. The portable stanchions shall be 1-1/2 inch square tube with 3/16" wall thickness set on 6-inch high square tube stubs, which are welded to the deck, spaced 4 to 6 feet apart. The stubs shall be fitted with drain holes to prevent build up of water inside. The stanchions shall be pinned to the stubs with 3/8-inch diameter stainless steel hex head bolts with nylock nuts. Each stanchion shall be equipped with two lengths of 3/16-inch stainless steel chain fitted with welded staples to one side of the post. The other end of the chains shall be fitted with snap hooks to engage staples on the next stanchion. Chain heights at the stanchions shall be 20 inches and 42 inches above the main deck.

2. Towknees

The Contractor shall provide and install handrails on both sides of the steps leading up the aft side of each towknee. The handrails shall be 1-1/2 welded mild steel square tube with 3/16" thick wall in two tiers with vertical stanchions approximately every 5 feet measured horizontally. The top tier shall be 34 inches measured vertical above the step toe. The lower tier shall be 15 inches measured vertically.

The railings on the top of the towknees shall be of similar height and construction as the handrails described for the upper deck.

Grab rails similar to those around the main deck deckhouse shall be fitted to the outboard sides of the towknees.

3. Main Deck Interior

The Contractor shall provide and install a two tier square tube railing system around the openings in the main deck between the upper machinery space and the lower engine room.

The railings and stanchions shall be 1-1/2 inch mild steel square tube with 3/16" wall thickness. The top railing shall be 42 inches above the deck and the second tier shall be 20 inches above the deck. The stanchions shall be located at frames and spaced no more than 6 feet apart. The railings around the engine cutouts shall be removable to allow for ease of removal of the main engines.

4. Upper Deck

Wherever a 42" high fashion plate bulwark is not present, provide a stationary square tube railing around the perimeter of the deck. Where

opens are required for ladders and side egress walkway extensions, the open shall be no wider that the ladder or ramp. The top railing shall be 1-1/2 inch mild steel square tube with 3/16" wall thickness, 42 inches above the deck. An intermediate rail of 1-1/2 inch mild steel square tube with 3/16" wall thickness shall be positioned 20 inches above the deck. The railings shall be set on 1-1/2 inch mild steel square tube with 3/16" wall thickness stanchions located over deck support structure and spaced no more than 5 feet apart. Provide a length of 1/4-inch stainless steel chain with end snap hooks and staples welded to the stanchions at each tier in way of openings.

5. Texas Deck and Electronic/Plenum Deck (CLIN 0002, CLIN 0003 & CLIN 0004 only)

Provide and install a square tube railing around the perimeter of the Texas Deck and the electronics/plenum half-deck similar to the Upper Deck.

6. Pilothouse Deck

Provide and install a square tube railing around the perimeter of the pilothouse deck similar to the Upper Deck.

7. Pilothouse Top

Provide and install a single 1-1/2 inch mild steel square tube grab rail around the perimeter of the pilothouse top 3-inches above the Pilothouse Top Deck. If the air draft height restriction of CLIN 0001 does not permit a permanent grab rail, the grab rail shall be omitted on that vessel.

D. GRATINGS

Grating supplied and installed shall be of the hot dip galvanized bar type, non-skid of about 3/16 inch x 1 inch flat bars on 1 inch centers and shall be designed to support a load of 100 lbs. per square foot. Deflection under fully loaded conditions shall not exceed .01 times the span.

Gratings shall be accurately fabricated and free from paint, warp, twist, or other defects affecting their appearance or serviceability. Grating shall be cut and banded for fitting around piping, ducting, etc., in such a manner that no sacrifice of strength results.

Grating shall be installed in accordance with the manufacturer's recommendations. Clip fasteners shall be stainless steel and provided by the manufacturer of the grating and shall be attached to the support structure with stainless steel hex head bolts with nylock nuts.

Grating sections shall be located:

- Over the Main Deck Openings over the Main Engines.
- Over the Steering and Flanking Rudder tiller arms and stops.
- (CLIN 0001) On the Pilothouse Deck in front of and on the Port and Starboard sides of the Pilothouse.
- (CLIN 0002, CLIN 0003 & CLIN 0004) On the Electronics/Plenum Deck front of and on the Port and Starboard sides of the Pilothouse as shown on the Contract Drawing.

The bearing bars of the grating forward and just below the Pilothouse front shall run fore and aft.

The bearing bars to the port and starboard of the Pilothouse front grating shall run transversely to provide the minimum vision obstruction.

E. FLOOR PLATES

Floor plates shall be provided in the lower engine room, forward machinery space, shaft alley and forward storage space. The floor plates shall be positioned above the longitudinals and transverses and supported through a framework of angles and stanchions to the hull structure.

Floor plates shall be 1/4 inch aluminum diamond tread. These plates shall be in sections for easy removal and shall be secured with countersunk flat head stainless steel screws (minimum 1/4" diameter screws on 24" centers). Sections shall be sized so that a single person may lift out each panel. The supports shall not extend above the surface of the abutting plates. The plates shall be required to be flat and free from warp, twist, and other defects affecting their appearance and serviceability.

Generally, the floor plates and their support structure shall be designed to support static loads of 100 lbs. per square foot without excessive deflections. Floor plates shall be locally reinforced, as necessary, where greater loadings are contemplated in the removal or disassembly of machinery for overhaul.

Hinged sections of floor plate shall be provided in way of all valves, strainers, and under floor equipment requiring operation, inspection or maintenance. Flush type lifting rings or finger holes (ground smooth) shall be provided in the hinged plate sections.

Care shall be taken to isolate dissimilar metals.

C427 VERTICAL AND INCLINED LADDERS

A. CONTRACT DRAWINGS

CLIN 0001

557-B205-01 OUTBOARD PROFILE
557-B215-01 GENERAL ARRANGEMENT
557-B233-01 PILOTHOUSE DETAILS
557-B245-01 HOLD & MACHINERY ARRANGEMENT
557-B301-02 INBOARD PROFILE

CLIN 0002, CLIN 0003 & CLIN 0004

556-B205-01 OUTBOARD PROFILE
556-B215-01 GENERAL ARRANGEMENT
556-B233-01 PILOTHOUSE DETAILS
556-B245-01 HOLD & MACHINERY ARRANGEMENT
556-B301-02 INBOARD PROFILE

B. VERTICAL LADDERS

Vertical ladders shall be installed at all hatches, bolted plate accesses, from the emergency exits to the main deck and from the pilothouse deck to the pilothouse top. All vertical ladders shall be removable, except for individual rungs welded to the structure.

With the exception of any 304 stainless steel ladders in the potable water tanks, all vertical ladders shall be carbon steel construction of (minimum) 2-1/2 inch x 3/8 inch flat bar stringers with (minimum) 5/8 inch square rungs set on edge and welded to the stringers on 12 inch centers. All rungs shall have at least 16 inch wide effective rung width and 7 inch toe room. Ladders more than 8 feet long shall have intermediate supports.

Where ladders are required on bulkheads or tank sides, they may be separate rungs of 3/4 inch square bar welded to the structure. Where not extended from side to side of adjacent structure, these rungs shall be stirrup shaped to prevent slipping endwise. Rungs shall be a minimum of 12 inches wide with 7 inches toe room. Rungs shall be fitted on the inboard side of each towknee.

C. INCLINED LADDERS

The Contractor shall provide and install inclined ladders for the vessels in the locations shown on the Contract Drawings. The inclined ladder widths shall be as measured from the Contract Drawings. The raiser heights shall be between 7 inches and 8-1/2 inches and all raisers in any one ladder shall be of equal height. The interior inclined ladder from the floating main deck to the pilothouse shall be considered a single

inclined ladder and all raisers shall be the same height throughout. The angle of any inclined ladder shall not exceed 50 degrees from the horizontal.

All inclined ladders shall be constructed of mild steel, except for the ladder leading down to the lower engine room, which shall be fabricated from non-skid open type grating treads with nosing installed. The ladder leading to the lower engine room shall have a dirt shield installed behind it, as well as being removable to assist in the maintenance and replacement of equipment. Fasteners shall be stainless steel.

Inclined ladders with bulkheads on one or both sides shall have a handrail on one side only. The height of the top of the handrail shall be 34 inches measured vertically from the tread toe. Freestanding ladders shall have two courses of handrails installed on both sides of the ladder, with the top of the top handrail measuring 34 inches vertically from the tread toe.

Non-skid tread and safety nosing, similar to WOOSTER, shall be installed on all inclined ladders.

C430 DECK COVERING AND CEILING

A. DECK COVERING

1. Exterior Decks

The exterior decks consist of the main deck, top of the towknees, the upper deck, the Texas deck (CLIN 0002, CLIN 0003 & CLIN 0004), the electronics/plenum deck (CLIN 0002, CLIN 0003 & CLIN 0004), the pilothouse deck, and the pilothouse top. A non-skid surface shall be applied to all of these decks. See coating schedule in Clause C406.

2. Interior Decks

All steel interior decks shall be prepared as recommended by the deck covering manufacturer prior to the floor covering installation.

Floor coverings and accessories, including any necessary sealers and finish coating, shall be installed in accordance with the manufacturer's recommendations and instructions.

For all interior spaces of the floating deckhouse that receive a floor covering (other than paint), a sanitary cove base shall be installed. The cove base shall be of similar material and color to the adjacent floor covering, and shall be a minimum of 4 inches high. The cove base shall be worked around all bulkheads, cabinets and equipment. The coving shall be sealed at the top and bottom edge with a long lasting silicone seal.

Where coving will not fit below doorways, the coving shall be trimmed to suit or sealed by other means on an instance-by-instance basis as determined on site by the COR.

Care shall be taken to account for the deck drains when installing the floor coverings in the toilet spaces and the laundry (CLIN 0002, CLIN 0003 & CLIN 0004). The floor coverings in these spaces shall be sloped down to the drains.

During the Construction Phase, the COR shall select the floor covering colors from available colors. A maximum of five different colors may be chosen.

Specific deck coverings shall be as follows:

a. Machinery/Work Spaces

The electronics/plenum room (CLIN 0002, CLIN 0003 & CLIN 0004), deck storage room, the walkway between the floating deckhouse and the upper machinery space, the upper machinery space, the engineer's workshop, the generator room, and the steering gear room are all considered machinery/work spaces. The decks of these spaces shall all receive a coating system in accordance with Clause C406).

The clothes washer/dryer area (CLIN 0001) of the upper machinery space shall be enclosed in a 6" high watertight sill. The area shall be served by a floor drain connected to the grey water system.

b. Pilothouse

The pilothouse floor shall be an overlay similar to 1/8-inch Dex-O-Tex Magnabond, 1 inch thick Insulite insulation, and 3/8-inch resilient rubber marine flooring similar to Tuflex (Tuflex Rubber Products, Tampa, FL 1-800-543-0390). Transition between tiles and other deck coverings shall include pieces specifically designed for this purpose (such as Tuflex Reducer Strip).

c. Stairwell Landings

The stairwell landings shall be an overlay similar to 1/8-inch Dex-O-Tex Magnabond, 1-inch thick Insulite insulation, and 1/8-inch thick raised radial rubber tile similar to Flexco (RBT).

d. Wet Spaces

The toilet/showers spaces, deck toilets, and the laundry room (CLIN 0002, CLIN 0003 & CLIN 0004) are all considered wet spaces.

All wet spaces on the upper deck and above shall have floors with an overlay similar to 1/8-inch Dex-O-Tex Magnabond, 1-inch thick Insulite insulation, and shall be covered with a poured neoprene latex mastic similar to Neotex-28 type Dex-O-Tex.

All wet spaces on the floating deckhouse main deck shall have floors with an overlay similar to 1/8-inch Dex-O-Tex Magnabond, 1-1/4 inch thick Insulite insulation, and shall be covered with a poured neoprene latex mastic similar to Neotex-28 type Dex-O-Tex.

e. Upper Deck & Texas Deck (CLIN 0002, CLIN 0003 & CLIN 0004)

All other spaces on the upper deck and the Texas deck (CLIN 0002, CLIN 0003 & CLIN 0004) shall have floors with an overlay similar to 1/8-inch Dex-O-Tex Magnabond, 1-inch thick Insulite insulation, and 1/8-inch thick raised radial rubber tile similar to Flexco (RBT).

f. Main Deck Level (Within the Floating Deckhouse)

All other spaces on the main deck level of the floating deckhouse, except the deck storage room, shall have floors with an overlay similar to 1/8-inch Dex-O-Tex Magnabond, 1-1/4 inch thick Insulite insulation, and 1/8-inch thick raised radial rubber tile similar to Flexco (RBT).

B. CEILING

1. Upper Deck, Texas Deck (only CLIN 0002, CLIN 0003 & CLIN 0004), & Main Deck Levels

A suspended, vinyl faced, Class A fire resistant, fiberglass panel ceiling, 5/8-inch thick (minimum), shall be installed for the overhead of the Upper Deck, the Texas Deck (CLIN 0002, CLIN 0003 & CLIN 0004), and Main Deck (forward of the upper machinery space) levels, except the toilet/shower spaces. The ceiling furnished shall be a drop-in ceiling tile system similar to ARMSTRONG Commercial Ceiling Panels type "Random Fissured" with square lay-in with acoustical NRC minimum

value of .55 and minimum R value of 2.6 Btu using metal T tracks, 24 inch x 24 inch and 24 x 48 inch tile sizes, and perimeter support angles. The metal track system shall also accept and support the standard 2 x 4 foot two tube fluorescent light fixtures. The track system shall be hung from the framing system of the deck above. The color scheme of the ceiling and track system shall be selected by the COR from available color options.

The finished clear headroom height shall be 7'-0" except where additional height is required for door clearance. The ceiling may be "stepped" to accommodate extended ceiling height at doors. The entire space adjacent to extended ceiling height doorways shall be of the same height as at the doorway with the step down to 7'-0" head clearance occurring at the transition to the next space.

2. Toilet/Shower Spaces

All combination toilet/shower spaces shall be furnished with a suspended, vinyl plastic paint faced, fire resistive, mineral fiber, non-perforated panel ceiling, 5/8-inch thick (minimum). The ceiling furnished shall be a drop-in ceiling tile system similar to ARMSTRONG Ceramaguard Fine Fissured Ceiling Panels with square lay-in using metal T tracks, 24 inch x 24 inch and 24 x 48 inch tile sizes, and perimeter support angles. The metal track system shall also accept and support the fan and light fixtures. The track system shall be hung from the framing system of the deck above. The finished clear headroom shall be 7'-0". The color scheme of the ceiling and track system shall be selected by the COR from available color options.

3. Pilothouse Deck Level

Furnish and install a suspended, vinyl plastic paint faced, fire resistive, mineral fiber, panel ceiling, 5/8-inch thick (minimum). The ceiling furnished shall be a drop-in ceiling tile system similar to ARMSTRONG Ceramaguard Fine Fissured Ceiling Panels with square lay-in using metal T tracks, 24 inch x 24 inch and 24 x 48 inch tile sizes, and perimeter support angles. The metal track system shall also accept and support the standard 2 x 4 foot two tube fluorescent light fixtures. The track system shall be hung from the framing system of the overhead above. The finished clear headroom height shall be 7'-0".

Oak plywood minimum 3/4 inch thick shall be furnished and installed for the full width ceiling above the console in the Pilothouse. The lower side of the plywood shall be flush with the finished drop ceiling surface. Plywood in this area shall be used for mounting overhead equipment. To support these loads, the plywood shall be bracketed and

bolted directly to steel house structure. Fore and aft length of plywood shall match fore and aft length of the console.

C435 JOINER WORK

Joinery shall include all Contractor constructed closets, cabinets, settees, custom cabinetry and trim work. Trim and molding associated with sheathing and insulation is included with the sheathing and insulation in Clause C436. Cabinets purchased complete from a manufacturer or retailer shall be identified on the furnishings plan (Clause C437).

The Contractor shall develop a drawing detailing the construction of all custom joiner work. Sufficient detail shall be provided to permit future maintenance and repair of each unit. Units purchased complete from a manufacturer or retailer shall not be included on this plan. However, catalog cut-sheets shall be provided with the furnishing plan (Clause C437).

In the Pilothouse, wood or vinyl covered aluminum trim shall be fitted around windows, doors, consoles, controls and electrical panels as required to present a pleasing appearance.

In order to minimize mullions between forward Pilothouse windows, no joinery shall be provided between forward windows.

There shall be no wood behind joinery. If used, furring strips shall be metal.

All items mounted against the bulkhead panels shall be fastened through the panels directly to vessel structure.

Doors, windows, lighting fixtures, and ventilation penetrations shall be integrated into the joinery system using moldings and trim pieces provided by the sheathing or joinery manufacturer for that purpose.

All cabinetry shall be provided and installed complete with appropriate drawer slides, hinges and handles.

The color scheme of joiner work shall be selected by the COR from available color options.

C436 INSULATION AND SHEATHING

A. INSULATION

Insulation shall be provided for all exterior deckhouse bulkheads and deckheads, the underside of the floating deckhouse and all interior deckhouse decks, the interior of the stacks, the interior of the plenum closets, the interior bulkheads of the engineer's workshop, and for bulkhead and deckheads bordering the below deck lower engine room, the forward machinery space, shaft alley and forward storage space (to 12 inches above the floor plates).

Insulation, sheathing, and the mounting system used for each shall be suitable for marine workboat service, anticipating high levels of dampness and vibration, and temperature extremes. Insulation shall be in accordance with USCG regulations.

Installation shall be in accordance with the manufacturers' recommendations for the intended service. However, as a minimum, the mounting studs shall be welded to bulkhead/roof structure. Adhesive mounting is not acceptable.

The insulation system shall be fiberglass similar to CLAREMONT's Claretex N-3A Hullboard and sufficient to meet the acoustic criteria in Clause C180, and the thermal criteria in Clause C685. In all cases, insulation thickness shall not be less than 4 inches.

Insulation in the lower engine room, forward machinery space, shaft alley, forward storage room, deck storage room, upper machinery space, generator room, engineer's workshop, passageway along side generator room (CLIN 0001), steering gear room, stacks, plenum closets, and electronics/plenum space (CLIN 0002, CLIN 0003 & CLIN 0004) shall be specially faced on the inboard surface with a fiberglass scrim reinforced mylar damage resistant material similar to CLAREMONT's "Tuff-Skin 1613."

All insulation shall be kerfed to wrap around stiffeners larger than 4 inches in depth, with additional filler under flanges. The system shall be applied to stack hatches such that the hatches may be removed with the system integral with the hatch.

B. SHEATHING

1. Installation

Sheathing shall be provided in all areas with insulation, except as noted within this clause. All interior bulkheads of the floating deckhouse shall be sheathed, except as noted within this clause.

Since the insulation treatment wraps around stiffeners, furring strips shall be required to provide a firm fair base for the sheathing. The furring strips shall be mounted to stiffeners with stand offs to avoid

crushing the insulation and acoustical treatments. Sufficient furring shall be provided to provide a fair surface for the sheathing. All furring shall be metal. No wood is permitted behind sheathing.

Framing, furring strip, and fastener spacing shall prevent drumming and vibration of sheathing. The sheathing shall be fastened to the furring strips or the deckhouse framing by pop rivets, or self-tapping stainless steel sheet metal screws. The fastening system may be assisted by the use of adhesive similar to 3M Company's 42-NF Plus NV FASTBOND between the metal furring and the sheathing. However, the adhesive shall not be a substitute for effective securing of the sheathing with fasteners. All fasteners not in machinery spaces shall be covered with decorative caps.

Access panels shall be provided as required for access to wiring or piping behind the sheathing. Access panels shall present a pleasing appearance and be consistent with the surrounding sheathing. Edges shall be ground smooth or covered with vinyl trim.

All items mounted against the bulkhead panels shall be fastened through the panels directly to bulkhead support structure.

2. Machinery Spaces

The lower engine room, forward machinery space, shaft alley, forward storage space, upper machinery space, generator room, engineer's workshop, steering gear room, passage along side the generator room (CLIN 0001), deck storage room, plenum closets, and the electronics/plenum space (CLIN 0002, CLIN 0003 & CLIN 0004) shall be considered machinery spaces for the purpose of this clause.

The plenum closets and the interior of the stacks shall not be sheathed.

Sheathing in the machinery spaces shall be 14 gage perforated aluminum sheets with a minimum of 30% open area. The perforated sheathing shall have a white baked enamel or equal finish.

3. Floating Deckhouse

Sheathing for vertical surfaces within the floating deckhouse shall be about .050 inch thick aluminum sheet with vinyl finish similar to MALLYCLAD, Madison Heights, MI 48071 (313-585-4110).

Vertical sheathing panels shall extend above the ceiling to ensure a finished line at the ceiling edge. All vertical edges shall be properly

sealed and trimmed with materials provided by the manufacturer of the sheathing for that purpose. The bottom edge of the sheathing shall be sealed prior to the installation of the coving (Clause C430).

Vinyl faced aluminum trim pieces shall be fabricated and installed to finish off the openings around windows to the sheathing. When available, trim pieces shall be provided by the same manufacturer as the sheathing.

Sheathing shall not be installed behind the shower modules.

The color scheme of the sheathing shall be selected by the COR from available color options, four colors maximum.

C437 FURNITURE AND FURNISHINGS

A. CONTRACT DRAWINGS

CLIN 0001

557-B215-01 GENERAL ARRANGEMENT
557-B233-01 PILOTHOUSE ARRANGEMENT
557-B245-01 HOLD & MACHINERY ARRANGEMENT

CLIN 0002, CLIN 0003 & CLIN 0004

556-B215-01 GENERAL ARRANGEMENT
556-B233-01 PILOTHOUSE ARRANGEMENT
556-B245-01 HOLD & MACHINERY ARRANGEMENT

B. ENGINEER'S WORKSHOP

A working area shall be provided adjacent to the upper machinery space and it shall be equipped with a 30" x 60" x 34" high workbench fitted with 1 3/4" thick hardwood top and metal lower shelf and steel cabinets with doors above and shelf under cabinets, similar to EQUIPTO Tool Bench system. A table with chair shall be provided for the engineer to sit and work from a laptop style computer. Shelving shall be provided for the Operator's Manual and reference books. The Generator Controls shall be located within this space as shown on the Contract Drawings.

C. LAUNDRY

The laundry area (CLIN 0001) shall be located at the forward end of the upper machinery space as shown on the Contract Drawings. The laundry room (CLIN 0002, CLIN 0003 & CLIN 0004) shall be located within the floating deckhouse on the main deck level aft as shown on the Contract Drawings.

The Laundry shall contain the following:

- A stainless steel deep sink with a combining faucet with a separate lever type handle for hot water and a separate lever type handle for cold water. The spigot shall be a high gooseneck spigot with hose bibb.

- A large capacity washing machine similar to WHIRLPOOL ULTIMATE CARE II WASH SYSTEM Model LSQ9665JQ with a 3-speed motor and 3.0 cu. ft. capacity shall be provided and installed. The washing machine shall be of the same manufacture and matching model as the clothes dryer.

- A large capacity clothes dryer similar to WHIRLPOOL GOLD ELECTRIC DRYER WITH ULTIMATE CARE II Model GEQ8858KQ with 7.0 cu. ft. capacity and front door lint screen. The clothes dryer shall be of the same manufacture and matching model as the washing machine.

- A cabinet over the washer and dryer to store cleaning supplies.

Permanent hook-up to vessel water and drain systems will be provided for the washing machine. The dryer shall be properly vented to the outdoors. The washer and dryer shall each have a dedicated electrical receptacle and shall be on separate circuits with breakers.

D. GALLEY AND MESS

The Galley/Mess Area shall be arranged as shown on Contract Drawings.

The Huntington Towboat (CLIN 0002), the ST. Paul Towboat (CLIN 0003), and the Rock Island Towboat (CLIN 0004) shall have a commercial quality vertical trash compactor similar to Compactors, Inc. (843-686-5503) Model TA-4500 with a loading chute door 24” x 18-1/2”, 6 cu. ft. capacity and cycling time less than 30 seconds. This compactor shall be located within the upper machinery space against the forward bulkhead near the doorways into the floating deckhouse.

The Galley areas for each vessel shall contain:

- Counter with cabinets and drawers below and cabinets above. All cabinets and drawers shall be fitted with handles.

- Countertop and backsplash to be stainless steel with a drain board built-in.

- Permanent hook-up to vessel water and drain systems will be provided for the dishwasher, and the icemakers. Each galley appliance shall have a

dedicated electric single receptacle (non-GFCI) and shall be on separate circuits with breakers.

- A 36-inch stainless steel range hood with light. The hood shall exhaust to the outdoors. The outdoor exit shall be equipped with a weather tight damper that opens when the fan is on.

- Pantry space with shelving and a lockable door.

- All galley appliances shall be of a size and shape that will permit removal from the vessel through existing passageways without alterations or modifications.

- Colors for cabinets and appliances shall be selected by the COR from the available colors.

For the Pittsburgh Towboat (CLIN 0001) specifically, the following shall be provided in the galley:

- A residential style under the counter dishwasher similar to WHIRLPOOL Model GU1200XTK. Color shall be compatible with the galley interior and shall be approved by the COR prior to purchase.

- A residential style electric range with self cleaning oven base.

- Microwave oven, 1.5 cubic feet, 1600 watt minimum similar to HOBART model HM1600.

- One industrial style stainless steel double door refrigerator with a minimum capacity of 35 cu. ft. similar to TRUE Model T-35.

- One industrial style stainless steel single door freezer with a minimum capacity of 23 cu. ft. similar to TRUE Model T-23F.

- An icemaker. The ice machine shall be similar to a MANITOWOC, Model QM45 making 95 lbs. of ice per day with a storage bin for 33 lbs. The condenser shall be air cooled. The ice machine shall be equipped with a water filtration system supplied by the ice machine manufacturer.

- Under counter type 15” residential style trash compactor similar to WHIRLPOOL Model GX900QPK. Color shall be compatible with the galley interior and shall be approved by the COR prior to purchase.

- A stainless steel triple basin sink with a single lever faucet and D spout. One side of the sink shall contain a rinser (hose spray).

For the Huntington (CLIN 0002), St. Paul (CLIN 0003), and Rock Island (CLIN 0004) Towboats, the following specific features shall be provided in the galley:

- A heavy-duty industrial style under the counter dishwasher similar to HOBART Model LX18 with a 304 series stainless steel tank, door and top panel. All attachments including racks shall be provided.

- A heavy-duty commercial style stainless steel electric range with 6 burners with marine options including oven door latch similar to GARLAND Model S686.

- A commercial style stainless steel 24" counter griddle similar to HOBART CG20.

- Two residential style refrigerator/freezers with ice maker. Each refrigerator/freezer shall have a minimum capacity of 21 cubic feet, and be a current model by a U.S. manufacturer and shall be similar to WHIRLPOOL Model GR2SHKXK. Color shall be compatible with the galley interior and shall be approved by the COR prior to purchase.

- One residential style upright automatically defrosting freezer with a minimum capacity of 24 cubic feet, and be a current model by a U.S. manufacturer and shall be similar to WHIRLPOOL Model EV250NXKQ. Color shall be compatible with the galley interior and shall be approved by the COR prior to purchase.

- Microwave oven with a minimum capacity of 1.2 cu. Ft. and 1200 watts similar to SHARP Model R-330EK.

- Coffee maker with two warmers similar to BUNN Pour-Omatic Model VPR. In addition to the two pots necessary to operate the unit, two spare coffee pots and one case of filters shall be provided with the unit.

- A stainless steel double basin sink with a single lever faucet and D spout. One side of the sink shall contain a rinser (hose spray).

The Mess area shall contain:

- A table and matching chairs with a seating arrangement for eight people.
- A 35" color television, with a VCR and DVD provided and wired to the television (CLIN 0001 only). This combination shall be mounted to the forward inboard bulkhead of the Mess adjacent to the electrical plenum closet.

Colors of tabletop and chair cushions, to be selected by the COR from the available colors.

E. LOUNGE (CLIN 0002, CLIN 0003 & CLIN 0004)

A lounge shall be provided and furnished with the following:

- A sofa.
- Chair matching the sofa.
- Side table.
- Table lamp.
- A coffee table.
- A 32" color television with a TV stand suitable to also hold the DVD and VCR equipment.
- A VCR and DVD complete and wired to the television and mounted on the TV stand.
- Water cooler.

Colors of furniture to be selected by the COR from the available colors.

F. OFFICE/LOUNGE (CLIN 0001)

An office with lounge furnishings shall be provided and furnished with the following:

- Workstation suitable for a desktop computer extending along the longitudinal inboard bulkhead and around the aft corner in accordance with the Contract Drawings.

- Desk chair.
- 42" wide, 4 drawer, lockable steel lateral file cabinet.
- Sofa.

Colors of workstation, chair, sofa and file cabinet to be selected by the COR from the available colors.

G. STATEROOMS

1. General

Staterooms are located in the floating deckhouse and shall be arranged as shown on the Contract Drawings.

The bunks shall be built for an 80-inch twin size mattress with a 1-inch "finger" clearance left all around the mattress. The berth in the Captain's stateroom shall be built for a standard double/full size mattress.

A bunk light shall be provided and installed above each berth. A duplex outlet shall be installed in each stateroom bulkhead (minimum four per room), with no more than two duplex receptacles on a single circuit with breaker.

Colors of the bunks, chairs and cushions, storage lockers, and desks to be selected by the COR from the available colors.

2. Single Staterooms

For the single crew staterooms, each shall be equipped as follows:

- A single berth with locking drawers below. Draw locks shall be keyed alike.
- One customized locker with two individual locking cabinets side-by-side above and two locking drawers below approximately 54" wide by 24" deep full height as shown on the Contract Drawings.
- Two bulkhead mounted coat hooks.

3. Double Staterooms

For the double crew quarter staterooms, each shall be equipped as follows:

- A double berth (upper and lower) with locking drawers beneath the lower berth. Drawers shall not be keyed alike.
- One customized locker with two individual locking cabinets side-by-side above and two locking drawers below approximately 54" wide by 24" deep full height as shown on the Contract Drawings.
- Four wall mounted coat hooks.
- For the two double staterooms sharing a T/S space on the port aft side of the upper deck, a corner vitreous china lavatory shall be mounted on the bulkheads as shown on the Contract Drawings. The faucets provided for the lavatory sinks shall be low flow type, cast brass, chrome plated, and dual handled. A mirror and shelf shall be fitted over the sink. Two towel bars shall be mounted on the bulkhead along side the lavatory.

4. Pilot's Stateroom (CLIN 0001)

The Pilot's stateroom, shall be equipped as follows:

- A double berth (upper and lower) with locking drawers beneath the lower berth.
- One customized locker with two individual locking cabinets side-by-side above and two locking drawers below approximately 54" wide by 24" deep full height as shown on the Contract Drawings.
- Four wall mounted coat hooks.
- A desk.
- A desk chair.

5. Oiler's Stateroom (CLIN 0002, CLIN 0003 & CLIN 0004))

The Oiler's stateroom, shall be equipped as follows:

- A single berth with locking drawers beneath the lower berth.
- One customized locker with two individual locking cabinets side-by-side above and two locking drawers below approximately 54" wide by 24" deep full height as shown on the Contract Drawings.

- Two wall mounted coat hooks.
- A desk.
- A desk chair.

6. Captain's Stateroom

The Captain's stateroom, shall be equipped as follows:

- A single berth sized for a standard double/full mattress with locking drawers beneath the lower berth.
- One customized locker with two individual locking cabinets side-by-side above and two locking drawers below approximately 54" wide by 24" deep full height as shown on the Contract Drawings.
- Two wall mounted coat hooks.
- A corner workstation with file cabinet below (CLIN 0001 only).
- A desk chair (CLIN 0001 only).
- A sofa and coffee table (CLIN 0002, CLIN 0003 & CLIN 0004 only).

F. OFFICE (CLIN 0002, CLIN 0003 & CLIN 0004)

The Office shall be arranged as shown on the Contract Drawings. It shall contain the following:

- Two workstations suitable for desktop computers and additional desktop space for computer printer, copier, and fax machine.
- Three desk chairs.
- Three file cabinets below the workstation desktop.
- Cabinets below the desktops to store office supplies.

Colors of all furnishings shall be selected by the COR from available colors.

G. TOILETS AND SHOWERS

Toilet/shower spaces and the deck toilet are located in the deckhouse and shall be arranged as shown on the Contract Drawings. All toilet/shower spaces and deck toilet shall contain the following, except as noted:

- A low consumption water closet (1.6 gallons). The water closets with tanks shall be CRANE Galaxy Model 3674 (vitreous china) with

elongated rims. Each water closet shall be supplied with an open front seat with lid and stainless steel hinge.

- A 24 by 24 inch built-in vanity with storage base beneath. The vanity shall contain a countertop-mounted lavatory. The vanity countertop shall be covered with Formica, color to be selected by the COR from available colors. No vanity shall be supplied for the shared toilet/shower space on the upper deck aft port side.

- A CRANE vitreous china lavatory shall be supplied for each vanity. The lavatory frame shall be supplied by the Contractor. The faucets provided for the lavatory sinks shall be low flow type, cast brass, chrome plated, and dual handled. No lavatory shall be supplied for the shared toilet/shower space on the upper deck aft port side.

- A mirror and shelf over the sink, two towel bars, three robe hooks, liquid soap container, paper towel holder for folded towels, and a toilet paper holder. No mirror, shelf, liquid soap dispenser, or paper towel holder shall be supplied for the shared toilet/shower space on the upper deck aft port side.

- A fluorescent light without receptacle shall be installed over each mirror. No fluorescent light shall be installed in the shared toilet/shower space on the upper deck aft port side.

- A GFCI duplex receptacle shall be provided in the head.

In addition, each Toilet/Shower space shall include:

- A square stainless steel shower, minimum of 36 x 36 inches. The shower stall shall be similar to an OMEGA Products, Square Unit. Each shower shall be equipped with a shower curtain. All plumbing fixtures shall be provided including showerhead and dual faucets.

All water closets and lavatories shall be white. All exposed valves and fixtures shall be chrome-plated brass.

H. LINEN AND DECK LOCKERS

The closet within the stairwell just above the upper deck shall be outfitted with three shelves to be used as a linen locker.

Flammable and combustible liquids lockers shall be provided in accordance with the Contract Drawings. Two lockers shall be provided for the Pittsburgh towboat (CLIN 0001) and three shall be provided for the Huntington (CLIN 0002), St. Paul (CLIN 0003,

and Rock Island (CLIN 0004) towboats. The lockers shall be properly vented in accordance with the Corps Safety Manual.

I. DECK STORAGE ROOM

The deck storage room shall be provided with 10 bulkhead mounted coat hooks, metal shelving for parts and equipment storage and a workbench with an 8" swivel base vise attached at one end.

J. ELECTRONICS/PLENUM SPACE (CLIN 0002, CLIN 0003, & CLIN 0004)

The space below the pilothouse shall be outfitted with shelves and racks to mount the electronic equipment.

K. PILOTHOUSE

The pilothouse shall be furnished with:

- Movable swivel pilot's chair. The chair shall be similar to TURNBULL CO., series 299, model 525-013.
- Chart table
- Overhead pull-down style rack for charts
- Settee with padded seat and back and drawers below and knee wall to prevent tripping hazard
- Control and operating console across the front of the pilothouse
- Computer workstation
- A vanity with a small stainless steel bar sink. The countertop shall be covered with Formica and contain a cabinet beneath.
- Small refrigerator
- Two chairs with arms and swivel base, each suitable for use at the computer workstation
- AM/FM/CD stereo (only CLIN 0002, CLIN 0003 & CLIN 0004)
- Concealable toilet

Colors of the pilot's chair, chart table, settee, console, the vanity and the chairs shall be selected by the COR from the available colors.

C445 LIFESAVING AND SAFETY

A. GENERAL

The Contractor shall provide and install the lifesaving and safety equipment listed below. The final equipment locations shall be made by the COR during the Construction Phase.

B. LIFESAVING EQUIPMENT

1. Buoyant Apparatus

One rectangular buoyant apparatus with net platform shall be provided and installed. The apparatus shall be USCG approved similar to a JIM-BUOY model 1310 (10 person capacity) with glass reinforced surface, shall be international orange in color, with retro-reflective tape per USCG Rules, with life line, and shall be fitted with a water light. The buoyant apparatus shall be set up to float-free from the vessel. The vessel name shall be stenciled on the buoyant apparatus.

2. Life Rings

Eight 30-inch diameter life rings, USCG approved, similar to a JIM-BUOY model number CGO-30 fitted with rope, shall be installed on life ring racks. An additional two life rings shall be provided for the Huntington (CLIN 0002), St. Paul (CLIN 0003) and Rock Island (CLIN 0004) towboats. Each life ring shall be provided with a self-igniting waterlight. Additionally, two of the life rings shall be provided with a self-activating smoke signal.

Each life ring shall be provided with 100 feet of 3/8-inch lifeline. The lifeline provided shall be resistant to deterioration from ultraviolet light. Each life ring shall be international orange in color, and shall be marked with retro-reflective tape per USCG Rules. The vessel name shall be stenciled on each life ring.

Two life rings, one with smoke, shall be mounted at the pilothouse deck level. Four life rings, one with smoke, shall be mounted at the main deck level. Two life rings shall be mounted at the upper deck level and two at the Texas deck level (CLIN 0002, CLIN 0003, & CLIN 0004).

3. Life Preservers

Nine USCG approved Type I PFD life preservers (eleven for CLIN 0002, CLIN 0003 & CLIN 0004) shall be provided for the appropriate

vessel. The life preservers provided shall be similar to SAFEGUARD model 190RT, international orange in color, and shall be marked with retro-reflective tape per USCG Rules. Each life preserver shall have the vessel name stenciled on it. Stowage of the life preservers shall be assigned by the COR during the Construction Phase.

C. SAFETY EQUIPMENT

1. First Aid Kit

One 24-unit first aid kit in waterproof container to be mounted in the mess/lounge area.

2. Distress Signals

Twelve USCG approved hand held distress signals shall be provided. Six signals shall be orange smoke and six shall be red distress flares. The signals shall be stored in a heavy-duty, waterproof, polythene type container with lid. The signals shall be stored in the pilothouse.

3. Fog Bell

One chrome plated cast bronze fog bell shall be provided and mounted on the forward side of the deckhouse. The bell shall be remotely operable by the pilot in the pilothouse. The bell shall have a bottom diameter of 12 inches, and shall be similar to a PERKO, model 150-012 CHR.

4. Clock and Barometer

One 4-inch diameter chrome plated marine clock and matching barometer to be mounted in the pilothouse.

C450 UTILITY BOAT AND DERRICK

A. CONTRACT DRAWINGS

CLIN 0001
557-B205-01, OUTBOARD PROFILE
557-B215-01, GENERAL ARRANGEMENT

CLIN 0002, CLIN 0003 & CLIN 0004)
556-B205-01, OUTBOARD PROFILE
556-B215-01, GENERAL ARRANGEMENT

B. DESCRIPTION OF WORK

The Contractor shall provide a utility boat and an electric/hydraulic deck crane for raising and lowering the boat. The utility boat and deck crane shall be located as shown on the Contract Drawings. The name of the towboat shall be stenciled on the port and starboard sides of the utility boat hull.

The utility boat provided shall be a flat bottom Jon boat with a length overall of 20 feet, with 7 feet beam overall, and be similar to a SEAARK Marine River Runner model 20. The boat shall have the following features:

- Provided with a 35 Hp outboard diesel motor similar to YANMAR D36.
- Battery and fuel tank.
- Provided with a rain cover.
- Equipped with the USCG safety package, including navigation lights.

The utility boat shall rest on padded wooden cradles, with the bow slightly higher than the stern, so that any rainwater will collect and flow out of the drain plug. The cradle shall be high enough at the stern in order that the motor can remain "down" in the normal operating position.

Securing cleats and tag lines shall be supplied with the utility boat for use with the deck in raising and lowering the boat into the water.

C456 WINCHES AND CAPSTANS

A. CONTRACT DRAWINGS

CLIN 0001
557-C205-01, OUTBOARD PROFILE
557-C215-01, GENERAL ARRANGEMENT

CLIN 0002, CLIN 0003, & CLIN 0004
556-C205-01, OUTBOARD PROFILE
556-C215-01, GENERAL ARRANGEMENT

B. WINCHES

Each winch shall be have no hydraulic components and shall be solely electrically powered. Each winch shall have an electric self-adjusting spring-loaded brake with a manual release and a manual locking dog for emergency use in case of electric brake failure.

Each winch shall have a holding force of not less than 60 tons and a line pull of at least 12000 pounds and a full drum speed of at least 16 FPM. Each winch shall be welded to a deck as stated below, and aligned with the roller buttons at the vessel side.

One hundred feet of 1 - inch diameter 6x19 IPS IWRC wire rope shall be provided on each winch drum. Three-foot long swaged eyes shall be provided in each rope.

The winches shall be welded to deck insert plates, and local reinforcement shall be provided under the deck in way of each winch.

Winches shall have local controls and remote controls in the pilothouse.

Special requirements for each vessel are as follows:

1. Pittsburgh District Towboat (CLIN 0001)

Four electrically powered barge winches similar to PATTERSON Model WWP65-7.5-14L/R Electric Winch shall be provided and installed at the bow, as shown on the Contract Drawings. Two double drum barge winches may be provided in lieu of four individual winches to preserve deck working space.

2. Huntington District Towboat (CLIN 0002), St. Paul District Towboat (CLIN 0003), & Rock Island Towboat (CLIN 0004)

Two electrically powered barge winches similar to PATTERSON Model 65-7.5-14L/R Electric Winch shall be provided and installed at the bow, as shown on the Contract Drawings.

C. CAPSTANS

1. Pittsburgh District Towboat (CLIN 0001)

One double barreled electric capstan similar to Schoellhorn-Albrecht Capstan Model 22300 spur geared with a 14-inch 21063 barrel and 10 hp forward and reversing motor shall be provided and installed on the bow deck area about 6 feet forward of the deckhouse and at centerline as shown on the Contract Drawings.

The capstan shall have a minimum starting pull of 12,000 lbs., a running pull of 6,000 lbs. at 48 FPM and a static (bollard) pull of 100,000 lbs. Power source shall be electric two-speed motor with a spur gear reducer. The barrel shall be 14-inch diameter.

2. Huntington District Towboat (CLIN 0002), St. Paul District Towboat (CLIN 0003), & Rock Island Towboat (CLIN 0004)

Two double barreled electric capstans similar to Schoellhorn-Albrecht Capstan Model 22300 spur geared with a 14-inch 21063 barrel and 10 hp forward and reversing motor shall be provided and installed on the bow deck area about 6 feet forward of the deckhouse and spaced about 8 feet as shown on the Contract Drawings.

The capstans shall have a minimum starting pull of 12,000 lbs., a running pull of 6,000 lbs. at 48 FPM and a static (bollard) pull of 100,000 lbs. Power source shall be electric two-speed motor with a spur gear reducer. The barrel shall be 14-inch diameter.

C460 NAMEPLATES, NOTICES AND MARKINGS

A. DRAWINGS

CLIN 0001
Contract Drawing #557-B205-01, OUTBOARD PROFILE
Reference Drawing #610-B460-01, COMMUNICATIONS MARK

CLIN 0002, CLIN 0003, & CLIN 0004
Contract Drawing #556-B205-01, OUTBOARD PROFILE
Reference Drawing #610-B460-01, COMMUNICATIONS MARK

B. COLOR SCHEDULE

The color schedule for the draft marks, hull markings, name boards, and stack insignia shall be in accordance with Clause C406.

C. DRAFT MARKS

Draft marks of raised Arabic type numerals, 6-inches in height and cut from 1/4 inch steel plate, shall be continuously welded to the shell plating. The draft numbers shall be located on the port and starboard sides of the vessel as shown on the Contract Drawings. The draft marks shall be measured from the underside of the bottom plating projected to the bottom of the numerals. The bottom of the figures shall correspond to multiples of 1 foot of draft.

D. HULL MARKINGS

The title "U.S. ARMY CORPS OF ENGINEERS," in Gothic letters 12 inches high, shall be cut from 1/4 inch steel plate and continuously welded to the vessel. The title shall be located on the port and starboard sides as shown on the Contract Drawings.

The title "U.S. ARMY CORPS OF ENGINEERS," in Gothic letters 8 inches high with a 4 inch space below to the home port, all cut from 1/4-inch plate shall be centered and seal-welded on the stern of the vessel on centerline.

The home port for each vessel shall be as follows:

CLIN 0001	PITTSBURGH, PA
CLIN 0002	HUNTINGTON, WV
CLIN 0003	ST. PAUL, MN
CLIN 0004	ROCK ISLAND, IL

The Contracting Officer's Representative shall approve the exact locations of the hull markings prior to installation.

E. NAME BOARDS

The name of the towboat shall be displayed on name boards at four locations:

- Port and starboard abreast the Pilothouse at the outboard rails.
- Above the stern at the aft end of the Upper Deck at the handrails
- The front of the vessel at centerline in the rail of the deck below the Pilothouse Deck.

The Contracting Officer's Representative shall approve the exact locations prior to installation.

Name boards shall be made of steel, rectangular in shape, 14 ga. thick, with 12 inch high Gothic letters printed in gold porcelain finish with a blue porcelain finish background. The name boards shall be provided with a 2-inch minimum border all around.

F. STACK INSIGNIA

Two Corps of Engineers "Communications Mark" devices shall be fabricated and installed, one each on the outboard side of the port and starboard stacks in clear view when the vessel is viewed in profile. This Communication Mark is detailed in the Reference Drawing. The Contractor shall adjust the scale of the drawing, while maintaining relative proportion, so that the largest insignia which will fit on the side of the stacks can be utilized.

The castle and border of the insignia and the base plate shall be made of 316 stainless steel plate, 3/8-inch thick and the castle and border shall be attached to the base plate with 2-inch long stainless steel standoffs. The base plate shall be the background for the Communication Mark and will be coated with red urethane paint, as noted in Clause C406. Both sides of the base plate shall be coated with millage equal to that applied to the deckhouse exterior. An assembled Communications Mark shall be bolted to each stack, on the outboard side, centered in the stack band. The edges of the plates shall be furnished true and smooth with no burrs.

Painted red stack bands shall completely encircle each stack. The red stack bands shall be trimmed with painted silver bands. The width of each red stack band shall be twice the height of the castle with 6 inch silver bands above and below the red stack band. The red and silver are defined in Clause C406.

C461 NOTICES AND MARKINGS

A. NAMEPLATES

Nameplates, serial number plates, tags, etc. shall remain in place on the equipment as furnished by suppliers. The Contractor shall use caution during construction to not damage or paint over nameplates. Damaged name plates shall be replaced prior to Final Acceptance.

All nameplates and notices shall be stamped or engraved on brass or plastic plates. All weather exposed nameplates, notices, and markings shall be of brass.

As a minimum, the following signs shall be provided:

- Four signs reading "DANGER NO TRESPASSING U.S. GOVERNMENT PROPERTY" shall be placed on the Main Deck. One shall be placed on the aft side of the deckhouse, one shall be located on the forward side of the deckhouse and two additional shall be placed on the deckhouse side bulkheads (exterior) one port and one starboard.

- "NO SMOKING" notices shall be placed at each fuel oil fill station and at the flammable chemicals deck locker.

- All controls, gauges, switches, etc., shall be labeled with phenolic label plates to permit operation of the vessel.

- An engraved metal fire control plan complying with the ABS Rules (Part 4, Section 7, paragraph 7.25.10). See Clause C679.

- Manholes, vents, fills and sounds shall be marked with tank identification and intended service with brass tags.

- Confined spaces shall have a sign stating "Confined Space DANGER Permit Required" that shall be located at each entry to each tank, hull void and hold compartment.

- The shore power receptacle shall be labeled to show the proper voltage; number of phases; and maximum current draw. Shore power receptacle notice shall also describe the recommended connecting procedure.

C480 TELEPHONE & DATA COMMUNICATIONS

Each stateroom shall be pre-wired for a future computer and telephone system. The pre-wiring shall include the appropriate wall jack for equipment connection.

For CLIN 0001, CAT-5 cable shall be pre-wired to serve:

- The pilothouse
- The five staterooms on the upper deck
- The deck storage
- The galley\mess
- The crew's lounge
- The engineer's workshop

For CLIN 0001, the system supplied shall allow for wireless remote tie-in.

For CLIN 0002, CLIN 0003 and CLIN 0004, CAT-5 cable shall be pre-wired to serve:

- The pilothouse
- The three staterooms on the Texas deck
- The ship's office
- The four staterooms on the upper deck
- The crew's lounge
- The deck storage
- The galley\mess
- The stateroom on the main deck
- The engineer's workshop

C481 TELEVISION SYSTEM

Each vessel shall be equipped with an omni-direction television antenna system. The antenna system supplied shall be similar to a Rivertronics RT-1000, RiverTenna model. The Contractor is responsible for providing and installing the entire system. The equipment to be supplied by the Contractor includes but is not limited to the antenna, pre-amp power supply, 2-way splitters, distribution amps, wall outlet covers, terminators, connectors, and coaxial cable.

The system shall be set up for 120 volt AC power and grounded in accordance with the manufacturer's recommendations. The antenna shall be mounted in order to not interfere with the navigation and communication equipment, and shall have the ability to be lowered in order to meet the height above the waterline requirement in contract Clause C105.

For CLIN 0001, antenna service shall be set up to serve the following spaces:

- The five staterooms on the upper deck
- The galley\mess
- The crew's lounge

For CLIN 0002, CLIN 0003, and CLIN 0004, antenna service shall be set up to serve the following spaces:

- The three staterooms on the Texas deck.
- The four staterooms on the upper deck.
- The crew's lounge.
- The galley\mess
- The stateroom on the main deck

C600 MACHINERY

C601 GENERAL REQUIREMENTS FOR PIPING SYSTEMS & MACHINERY

A. GENERAL

All machinery and piping systems shall be in accordance with the regulatory bodies referenced in contract Clauses C003 and C004, and shall also comply with additional regulatory bodies where specified. References made to specific sections of codes, rules and standards in these specifications are intended to emphasize specific salient items.

All equipment shall be rated for marine duty service.

All pumps are to be provided with mechanical seals.

Machinery guards shall be provided over all rotating and hazardous machinery. The guarding shall be consistent with that required by the U.S. Army Corps of Engineers, "Safety and Health Requirements Manual."

Manufacturers' recommendations, concerning fabrication and installation, shall be followed in addition to these specifications.

B. PRESSURE & TEMPERATURE GAUGES

All pressure gauges shall give readings in psig and all temperature gauges shall give readings in degrees Fahrenheit. The gauges shall be selected so the operating point is in the middle of the gauge range. All gauges shall be fitted with gauge isolation valves.

Pressure gauges shall be provided on the discharge of all pumps, and pressure/vacuum gauges shall be provided on the suction side on all positive displacement pumps and the bilge and ballast pumps.

Temperature gauges shall be provided on all piping that transfers a medium in excess of ambient temperature.

C. PIPING – GENERAL REQUIREMENTS

The use of the designation "line" in this specification is defined as all pipe, fittings, and valves in a piping run between the points indicated.

Piping shall be sized and arranged to obtain optimum operating conditions for the equipment and intended service. Items of piping not covered in these specifications, but required for proper installation and operation shall be furnished and installed the same as if specified.

System design shall route all piping as directly as practicable; shall not interfere with structure, machinery access or handling gear; and shall be sufficiently flexible and supported to account for thermal expansion, shock, vibration and the working of the vessel. Wherever practicable, piping shall be run below the grating or sole level. No piping runs shall be made through access openings.

A sufficient number of unions and /or flanges shall be installed in all pipe lines to permit dismantling of the lines and equipment. Valves shall be installed in sufficient quantity to isolate any piece of equipment in the systems.

Sufficient drains shall be provided to permit draining of all lines within the vessel in an even trim condition. The drains shall be provided at low spots in the piping, located so that they will be readily accessible. Screwed plugs shall be brass in all piping systems.

Pipes passing through watertight or oiltight bulkheads shall be made of extra heavy pipe in that section, in way of the penetration and the bulkhead or deck shall maintain its integrity. Where pipes pass through watertight bulkheads or decks, the penetrations shall be watertight.

Heat sensitive materials shall not be used in piping systems that penetrate watertight subdivisions where deterioration of such systems would, in the event of a fire, impair the watertight integrity of such bulkheads. Copper tubing that penetrates watertight bulkheads and decks shall use a suitable stuffing tube. Spool pieces with flanges shall be provided for all galvanized pipe penetrations to prevent the destruction of galvanizing due to welding.

All piping exposed in unheated spaces or to the weather and carrying fluids that can freeze shall be electrically heat traced, except that the fire main piping may be designed such as to be a dry system when not pressurized. Freeze protection shall be provided by installing drain plugs at all low points in all piping systems carrying fluids that can freeze.

D. PIPING – SPECIFIC REQUIREMENTS

All piping shall be schedule 40, ASTM A-53, Type S or E except where otherwise indicated.

All piping between the side shell and the first inboard valve shall be a minimum of schedule 80. Fasteners for valves at the hull connections and sea chests shall be stainless steel. All tank penetrations shall be through schedule 80 welded couplings unless specified elsewhere.

When three or more valves are located together for the same service, they shall be combined in a manifold.

Manually operated valves shall be readily operable by one person, directly or through mechanical advantage type operators.

E. PIPE ROUTING RESTRICTIONS

Piping shall not be run over or in the vicinity of switchboards, distribution panels, or other electrical equipment unless unavoidable, in which case flanged joints, valves, etc. shall not be installed in the vicinity.

Piping conveying flammable materials shall not be routed adjacent to or over hot surfaces unless unavoidable, in which case adequate shields shall be provided.

F. FLOATING DECKHOUSE PIPING FLEXIBILITY

All piping traversing between the main deck and the floating deckhouse and the after deckhouse and the floating deckhouse, shall be designed and installed with adequate flexibility to account for the movement of the floating deckhouse.

G. PIPE HANGERS

Rigid hangers shall be designed and located in accordance with ASTM Practices for the Design and Installation of Rigid Pipe Hangers, F708-92 (1997). The hangers shall safely support the weight of the piping, its operating or test fluid (whichever is heavier), and its insulation and lagging (where installed).

The number of supports installed, the type selected and their location shall prevent excessive vibration of piping under all system operating conditions, but they shall not constrain the piping to such an extent as to cause excessive transfer of load from support to piping or from support to support.

The locations and type of supports selected shall be to prevent excessive stress from being transmitted by the piping to machinery, equipment, or ship structure.

Hangers for copper pipe or tubing shall be lined with plastic. Non-ferrous metal pipes shall be insulated from direct contact with any steel structure.

H. PIPE CLEANING

All piping, piping appurtenances and applicable equipment shall be thoroughly cleaned after fabrication and prior to installation in the vessel. After complete installation, each system shall be thoroughly cleaned and flushed of all foreign matter with the applicable system's medium, or an approved substitute.

System flushing shall be conducted at the applicable system's maximum operating pressure and temperature, and above normal line velocity. However, prior to flushing operations, such units as heat exchangers, and control valves, having in-line mechanisms capable of trapping or being affected by the carryover of foreign matter, shall either be removed or blanked-off and bypassed.

C602 EQUIPMENT & PIPE MARKING

A. EQUIPMENT MARKING

Nameplates, serial number plates, tags, etc. shall remain in place on the equipment as furnished by suppliers. The Contractor shall use caution during construction to not damage or paint over nameplates. Damaged name plates shall be replaced prior to Final Acceptance.

All nameplates and notices shall be stamped or engraved on brass or plastic plates. All weather exposed nameplates, notices, and markings shall be of brass.

All controls, gauges, switches, etc., shall be labeled with phenolic label plates to permit operation of the vessel. This includes pilothouse equipment as well.

Label plates shall be attached to all mechanical equipment to indicate the system and function of the equipment.

B. PIPE MARKING

The Contractor shall mark all piping in the vessel to indicate is service and usage. The pipes shall be marked at each termination and at each watertight bulkhead penetration to indicate service and flow direction. Piping shall also be marked at the midpoint of long compartment runs.

Where possible, the Contractor shall follow wordings/combinations that conform to ANSI/OSHA specifications. To meet this requirement, standard markers, similar to those available from Seton shall be used.

All piping shall be marked and color coded in accordance with the following:

SYSTEM LEGEND	MARKER COLOR	LETTER COLOR
BALLAST	GREEN	WHITE
BILGE	GREEN	WHITE
BLACK WATER	BLACK	WHITE
CO2	RED	BLACK
COMPRESSED AIR	YELLOW	BLACK
DECK DRAIN	GRAY	WHITE
ENGINE COOLING	BLUE	WHITE
FIRE MAIN	RED	WHITE
FUEL OIL	YELLOW	BLACK
GEAR OIL	YELLOW	BLACK
GRAY WATER	GRAY	WHITE
HYDRAULIC	YELLOW	BLACK
LUBE OIL	YELLOW	BLACK
OILY BILGE	ORANGE	BLACK
POTABLE WATER	GREEN	BLACK
WASTE OIL	ORANGE	BLACK

The size of the legend letters and the length of the marker color field shall be as follows:

OUTSIDE DIAMETER OF PIPE OR COVERING IN INCHES	MINIMUM LENGTH OF COLOR FIELD IN INCHES	SIZE OF LEGEND LETTERS IN INCHES
¾ to 1-3/8	8	½
1-1/2 to 2-3/8	8	¾
2-1/2 to 6	12	1-1/4
8 to 10	24	2-1/2
over 10	32	3-1/2

Label plates shall be attached to all valves, manifolds, and pumps to indicate the system and function of the equipment.

For valves, the label plates shall be installed over the stem of the hand wheel, where possible, and shall indicate the direction of opening (or closing). The nameplate shall be 14 gauge (or heavier) brass with ¼ inch high engraved letters filled with black paint.

C605 PROPULSION SYSTEM

A. CONTRACT DRAWINGS

CLIN 0001
557-B605-01, PROPULSION SHAFTING & ARRANGEMENT
557-B615-01, STEERING LINKAGE & STRUT

CLIN 0002, CLIN 0003, & CLIN 0004
556-B605-01, PROPULSION SHAFTING & ARRANGEMENT
556-B615-01, STEERING LINKAGE & STRUT

B. MAIN ENGINES

The Contractor shall provide and install two, identical, marine-type, V-12, 4-stroke-cycle diesel engines of American manufacture. The engines shall be installed so that when the clutches are engaged to propel the vessel forward, the propellers rotate "inboard at the top."

Each engine shall operate at a continuous rating, rated for 1500 bhp at 1200 RPM, similar to a Caterpillar Model 3512B, high displacement, continuous "A." Each engine shall be turbocharged/aftercooled.

Each engine shall be provided with the manufacturer's standard equipment as well as the following features and options:

- Approved by ABS.
- Same rotation.
- Set up for air start. Air starting motors to be supplied by the engine manufacturer. Air starting motors shall be of the oil-less type.
- Set up for electronic controls.
- Configured as a closed jacket water cooled system using keel coolers. Coolant level sensors and gauges to be provided.
- Auxiliary expansion tanks and/or larger jacket water pumps if required to handle the cooling volume. Auxiliary expansion tanks shall be fitted with low alarms.
- Electric jacket water heater.

- Each engine shall be equipped with a crankcase vent filter/collector system similar to a NELSON EcoVent Recirculator. The EcoVent shall be supplied with a manometer and the drain line shall be returned directly to the engine oil sump, below the oil level.

- Each engine turbocharger and exhaust manifold shall be insulated or jacketed to maintain an outer skin temperature of less than 125 degrees F.

- Engine overspeed protection shall be provided in accordance with ABS Rules.

- Electric prelube pumps.

- The water, lube and fuel lines to all engine connections shall be fitted with USCG and ABS approved flexible connections.

- Each main engine oil sump shall be fitted with a ball valve and quick disconnect fitting so that oil can be added to or drawn from the sumps.

- Provided with a full length drip pan under the engine.

- Inboard access for local instrumentation panel and engine maintenance points.

- Each engine shall be supplied with lifting eyes and mounting support. The Contractor is responsible for supplying suitable foundations for the engines and marine transmissions.

- The fuel rate of the main engines shall be compared to the original factory performance specifications (PAR TEST) during the vessel's test and trials. This comparison shall be made for the entire operating range of the engines by a representative of the engine manufacturer using instrumentation to acquire real-time fuel rate and engine output.

- Four sets of manuals shall be supplied for the engines and the gears.

- Spare parts in accordance with contract Clause C805.

The engines and all associated equipment shall be installed in strict compliance with the engine manufacturer's recommendations and the installation shall be approved by the manufacturer's field representative.

C. ENGINE COMBUSTION AIR

Each main engine shall be fitted for a dedicated source of outside air for combustion. Each combustion inlet shall be fitted with an intake air cartridge filter similar to an Amer-Kleen Cartridge Double-Pak manufactured by American Air Filter. The Contractor shall size the filters based on the engine manufacturer's combustion requirements for the main engines selected.

D. MAIN ENGINE STARTING/STOPPING

Each engine shall be set up for air start. Starting and stopping of the main engines shall be at the Main Engine Control Panels located in the lower engine room between the main engines and from the pilothouse console.

The Contractor shall provide and install on the pilothouse console, in accordance with ABS Rules, an emergency engine shutdown for each main engine. The emergency shutdowns shall be alarmed at the Main Engine Control Panels. Normal operation shall be resumed only after manual reset of the emergency shutdowns at the Main Engine Control Panels. No automatic restarting is allowed after activation of the emergency shutdowns. All emergency shutdown buttons shall be provided with guards to prevent accidental activation.

E. REDUCTION GEAR & SHAFT BRAKE

The Contractor shall provide and install a reverse-reduction gear similar to a FALK model 2083 MRH with internal shaft brake for each main engine. The gear ratio shall be 4.500:1 based on the selection of the 1200 RPM engine. Each gear is to be capable of handling the full horsepower of each main engine in both ahead and astern operation.

Each gear shall the Contractor.

Bolts in the collision chocks shall be snugged against the engines after final alignment. Sufficient clearance shall be provided between the engines and the collision chock bolts to accommodate engine thermal dimension be suitable for throttle boost, torque up control sequencing, and shall have electric shift capability. Each gear is to produce Full RPM Ahead to Full RPM Astern in 12 seconds. Shaft brakes shall be provided to fulfill this requirement.

Each gear is to be provided complete with pumps, filters, thermometers, and the appropriate engine flange and controls. A torsional input coupling shall be provided.

The opposed propeller rotation will be provided by running one gear in forward and one gear in reverse.

F. PROPULSION CONTROL SYSTEM

The Contractor shall provide and install a complete control system for each main engine and reduction gear similar to the Sturdy Marine Propulsion Control System (MPCS). The control system shall be single point, set up for full electronic control with all electronic throttle and shift. No mechanical actuators may be provided as part of the control system. The installed control system shall meet the recommendations and practices of the engine, gear, and control system manufacturers.

The control system for each main engine and gear set shall incorporate:

- Throttle boost
- Engine torque-up sequencing
- Proportional neutral delay
- Shaft brake

The control system shall be configured to sequence the engines, reduction gears, clutches, and shaft brakes to accommodate and utilize torque-up and engine throttle boost. Control system delays, as well as boost and/or torque-up features shall be fully adjustable through software changes.

The control system supplied shall serve two stations, the engineer's workshop (station #1) and the pilothouse (station #2). Each control station shall be equipped with a dual lever control head. The main station for the control heads (throttles) shall be the engineer's workshop. Control is granted/transferred from this station to the pilothouse control head. Control of the throttles may be taken away from the pilothouse to the engineer's workshop at any time.

The control system shall also interface with the steering electronic controls to allow for independent flanking rudder and steering rudder operation. See contract Clause C615 for these requirements.

Power for the control system shall be set up such that:

- The power supplied is from a clean source.
- Back-up source of power is automatically transferred to in the event of a loss of primary power.

G. MAIN ENGINE INSTRUMENTATION & ALARMS

The Contractor shall supply and install the standard, local instrumentation panel supplied by the engine manufacturer. The local instrumentation panels shall be mounted inboard, between the main engines.

Each main engine shall be provided with an engine monitoring system available from the engine manufacturer. For these vessels, the Contractor shall supply and install a system similar to a Caterpillar Engine Vision System and a Caterpillar Engine Monitoring System.

The monitoring system provided and installed shall report and display engine system diagnostics and present audible and visual alarms for any of the engine and gear parameters measured. All audible alarms shall be provided with silencer buttons.

The Engine Vision System shall be installed in the engineer's workshop and shall allow for the simultaneous monitoring of each main engine and gear's operating parameters. For engine monitoring in the pilothouse, the Contractor shall supply and install the Engine Monitoring System for each main engine and gear set. All pilothouse instrumentation shall be furnished with lights and dimmer switches.

The instrumentation provided for the engineer's workshop shall be connected to an audible horn and flashing light located in the upper engine room as well as a set located in the lower engine to give notice of an engine or gear problem.

The engineer's workshop shall also contain the following additional alarms and instrumentation for the main engines and gears:

- Low starting air pressure alarm
- Pyrometers for measuring the exhaust stack temperatures
- Low level alarm for auxiliary expansion tanks

In addition to the Engine Monitoring System, the pilothouse shall also have shaft tachometers supplied and installed for each main engine. The shaft tachometers shall be supplied with lights and dimmer switches.

H. TORSIONAL VIBRATION ANALYSIS

A complete torsional vibration analysis shall be performed on the propulsion drive train, and the results shall be submitted to the COR for review and approval during the Engineering Phase of the contract. The analysis shall include calculations of the natural frequencies, location of all critical speeds within the entire speed range of the engines, and an estimate of the maximum vibration stresses encountered within this range. All terms and formulae used in the development of this analysis shall be explicitly

indicated. The torsional critical speeds shall be checked in accordance with ABS requirements.

The results of the analysis shall insure that each assembled system, which included the diesel engine, coupling, reduction gear, shaft brake, shafting and propeller shall be free of objectionably ("barred ranges") critical speeds due to torsional vibration over the complete range of operation from 10% below idling speed to 10% above the maximum engine speed rating.

If the Contractor's analysis indicates that there are critical speeds in the operating range, the COR shall be immediately notified with documentation of the problem and recommended solution.

I. PROPULSION SYSTEM ALIGNMENT

All propulsion system final alignment shall be performed with the vessel complete and afloat at normal load displacement. Alignment shall be in accordance with the engine and gear manufacturers' requirements and ABS requirements.

The shafting installation and alignment shall be checked prior to launch to verify proper bearing alignment and to ensure that no shafting is binding.

Collision chocks shall be provided and installed for both engines to prevent engine movement. The collision chocks shall be welded to the engine beds. Threaded jacking bolts shall be provided in the engine mounting pads to aid in engine alignment.

The engines and reduction gears shall be chocked after alignment with resin chocking. Chocking shall be applied in accordance with the manufacturer's recommended procedure. All surfaces, including bolts, shall be coated with proper releasing agent.

After being properly chocked, the mounting bolts shall be torqued down to manufacturer's specifications. All engine and reduction gear foundation bolts shall be fitted bolts provided byal growth.

C606 PROPELLERS & NOZZLES

A. CONTRACT DRAWINGS

CLIN 0001

557-B605-01, PROPULSION SHAFTING & ARRANGEMENT
557-B614-01, KORT NOZZLE
557-B615-01, STEERING LINKAGE & STRUT

CLIN 0002, CLIN 0003, CLIN 0004
556-B605-01, PROPULSION SHAFTING & ARRANGEMENT
556-B614-01, KORT NOZZLE
556-B615-01, STEERING LINKAGE & STRUT

B. CONTRACT DESIGN SELECTION

During Contract Design, calculations showed that the following propellers would be appropriate for use on each vessel:

- 5 blade
- 80 inch diameter
- Inboard Turning
- 87 inch variable pitch – approximate
- 0.94 DAR -approximate
- CT INLAND Style

C. DETAILED DESIGN SELECTION

The Contractor shall prepare propeller calculations to finalize the selection of the propellers. The calculations shall be submitted to the COR for review prior to purchase by the Contractor.

The propellers provided shall be:

- Five-bladed, 80-inch diameter, similar to CT INLAND style wheels available from Rolls Royce\Bird-Johnson.
- The actual variable pitch and DAR shall be determined as required for a design speed of 6.5 mph.
- ABS grade CF-3 stainless steel.
- Double-sided, anti-singing edges.
- One of the propellers shall be right hand and one shall be left hand.
- Set up to rotate inboard at the top.
- Each propeller shall be provided with a fairwater cap covering the propeller nut and providing for smooth waterflow.
- Provided with pull holes in the hubs.

D. DESCRIPTION OF WORK

The Contractor shall install the propellers in accordance with the contract drawings listed above.

The Contractor shall provide an ABS statement of fact that each propeller meets all ISO R484, Class II fabrication, finish, and balance requirements. ABS certificates shall be provided to the COR for each propeller including the spares. See contract Clause C805 for spares.

E. NOZZLES

Each vessel shall be equipped with propeller nozzles. The entire inside of the nozzles, including leading and trailing edge radii, shall be stainless steel. The nozzle profile shall be type CT-28. The nozzle length shall be 52.625 and the inside diameter shall be 81 inches.

No part of the nozzle shall extend below the baseline. The nozzle shall be designed and constructed in accordance with the Contract Drawing. The nozzles shall be designed and constructed to be integral with the hull structure.

C610 SHAFTING SYSTEM

A. CONTRACT DRAWINGS

CLIN 0001
557-B605-01, PROPULSION SHAFTING & ARRANGEMENT
557-B614-01, CT28 KORT NOZZLE
557-B615-01, STEERING LINKAGE & STRUT

CLIN 0002, CLIN 0003, CLIN 0004
556-B605-01, PROPULSION SHAFTING & ARRANGEMENT
556-B614-01, CT28 KORT NOZZLE
556-B615-01, STEERING LINKAGE & STRUT

B. DESCRIPTION OF WORK

The contract drawings listed above present a Contract Design for the shafting and struts. During the Detailed Design the Contractor shall perform engineering to finalize the shafting system.

Specific requirements of the shafting system are as follows:

- Shaft material shall be ABS Grade II steel.
- Shafts shall be continuous, without knuckle joints, ABS approved.
- Nickel-chrome-boron liners shall be fitted over the shaft where the shaft makes contact with the bearings and the shaft seal.
- The shaft "propeller end" and the "coupling end" details shall be to SAE J755 and SAE J756, respectively.
- The strut bearing and the stern tube bearing shall be similar to Johnson DURAMAX cutless bearings.
- Stuffing boxes shall be inflatable "air seal" type with grease lubrication, similar to Johnson, Figure 1787-IR.

A "scoop" shall be provided on the aft end of each stern tube sized and located in order to force water into the stern tube during the ahead operation of the vessel for lubrication of the stern tube bearings. Each stern tube shall be provided with a vent, terminating at the main deck level.

C. SHAFT STRUTS

Shaft struts shall be installed in accordance with the above contract drawings. The shaft strut arm shall be fabricated with a semi-circular front and trailing edge. The shaft strut arm shall run through the hull plating and be welded to the main structural members. Doubler plates shall act as closure plates around the strut arm.

The shaft strut shall be sized as required by ABS.

C612 RUDDERS

A. CONTRACT DRAWINGS

CLIN 0001

557-B605-01, PROPULSION SHAFTING & ARRANGEMENT
557-B612-01, RUDDER ARRANGEMENT (3 sheets)
557-B615-01, STEERING LINKAGE & STRUT

CLIN 0002, CLIN 0003, CLIN 0004

556-B605-01, PROPULSION SHAFTING & ARRANGEMENT
556-B612-01, RUDDER ARRANGEMENT (3 sheets)
556-B615-01, STEERING LINKAGE & STRUT

B. DESCRIPTION OF WORK

The contract drawings listed above present a Contract Design for the steering and flanking rudders. During the Detailed Design the Contractor shall verify that the rudder stock scantlings meet the requirements of the current ABS Rules and shall make any changes that may become necessary to meet those rules. The Contractor shall provide and install the stocks and rudders based on his final design.

Speed for the steering and flanking rudder designs shall be 12 mph. The hard over angle for all rudders shall be 45 degrees. It should be noted that ABS requires increases in stock size for rudders that rotate more than 35 degrees, and for speeds in excess of 10 mph. Rudders, rudder ports and bearings, and tillers shall be redesigned as required to accommodate the larger rudder stocks.

The Contractor shall perform all detail engineering necessary to incorporate the rudders into the steering system final design including rudder construction, stocks, bearings, stops, seals, grease fittings and keys.

C. GENERAL REQUIREMENTS

All cylinder foundations, jockey bars, and tillers shall be fitted with bronze bushings. Bushings shall be located where the cylinders meet the foundations or tillers and where the jockey bars meet the tillers.

Pins supplied shall be stainless steel. There shall be grease grooves on the pins with drilled passageways and alemite fittings. The Contractor shall ensure that all pins installed do not result in a loose fit. Anti-rotation clips shall be installed for the pins joining the jockey bars to the tiller arms.

Rudder stocks shall be fabricated from ABS approved steel with nickel-chrome-boron liners in way of the upper and lower bearings. The upper and lower rudder stock bearings shall be made from SAE 660 bronze pressed into the housings.

The steering and flanking rudder tubes shall be sealed at the bottom with plates and packed with grease.

D. STEERING RUDDERS

The steering rudder system shall consist of four steering rudders similar to those shown on the contract drawings. The steering rudders shall be keyed alike and be interchangeable.

Steering rudder travel shall be 45 degrees to each side of centerline. Maximum time for travel from hardover to hardover shall not be greater than 10 seconds in the bollard condition.

The steering rudders shall be configured to provide independent steering rudder pair control actuation and movement. The port steering rudder pair shall not be mechanically linked to the starboard steering rudder pair.

E. FLANKING RUDDERS

The flanking rudder system shall consist of four flanking rudders similar to those shown on the contract drawings. The leading and trailing edges of the flanking rudders shall be notched to clear the propeller shaft in the hardover condition. The flanking rudders shall be keyed alike and be interchangeable.

Flanking rudder travel shall be 45 degrees to each side of centerline. Maximum time for travel from hardover to hardover shall not be greater than 10 seconds in the astern bollard condition.

The flanking rudders shall be configured to provide independent flanking rudder pair control actuation and movement. The port flanking rudder pair shall not be mechanically linked to the starboard steering rudder pair.

C615 STEERING SYSTEM

A. CONTRACT DRAWINGS

CLIN 0001
557-B605-01, PROPULSION SHAFTING & ARRANGEMENT
557-B612-01, RUDDER ARRANGEMENT (3 sheets)
557-B615-01, STEERING LINKAGE & STRUT

CLIN 0002, CLIN 0003, CLIN 0004
556-B605-01, PROPULSION SHAFTING & ARRANGEMENT
556-B612-01, RUDDER ARRANGEMENT (3 sheets)
556-B615-01, STEERING LINKAGE & STRUT

B. SYSTEM SIZING REQUIREMENTS

The contract drawings listed above present a Contract Design for the steering system. The Contractor shall perform engineering to finalize the system and establish a Detailed Design.

The system to be provided is an electro-hydraulic steering system providing for full follow-up control for the steering and flanking rudders. The system shall meet all ABS requirements for towboats.

Sizing of the steering hydraulics (pumps, cylinders, etc) shall be based on the most demanding powering condition to allow the steering rudders and the flanking

rudders to go from hardover to hardover in 10 seconds. Both flanking and steering rudder travel is from 45 degrees to each side of centerline.

C. SYSTEM CONFIGURATION

The system provided shall be configured such that:

- The main (steering) rudder pairs can be operated independently of each other. There is no central jockey bar tying the port steering rudder pair to the starboard steering rudder pair.

- The flanking rudder pairs can be operated independently of each other. There is no central jockey bar tying the port flanking rudder pair to the starboard flanking rudder pair.

- The system is equipped with "electronic jockey bar" capability that allows for the pair of steering rudders to be tied together as well as it allows for the pair of flanking rudders to be tied together at the operator's discretion. This simulates a standard towboat steering and flanking system utilizing central jockey bars to tie the port and starboard rudder pairs together.

- The steering system is also electrically interlocked with the propulsion system controls to provide an auto-centering feature. See contract Clause C605 for the requirements of the propulsion control system.

The electrical interlocks are set up to operate in the following manner:

There is an electrical interlock between each main (steering) rudder pair (port and starboard) and its corresponding main engine. The interlocks automatically center a main (steering) rudder pair when the corresponding main engine is operating in the astern direction, without affecting the position of the other main (steering) rudder pair. As such, the main steering rudder levers (in the pilot house) normally only control the main rudders when the corresponding engines are in the ahead direction.

There is an electrical interlock between each flanking rudder pair (port and starboard) and its corresponding main engine. The interlocks automatically center a flanking rudder pair when the corresponding main engine is operating in the ahead direction, without affecting the position of the other pair of flanking rudders. As such, the flanking rudder levers (in the pilot house) normally only control the flanking rudder pairs when the corresponding engines are in the astern direction.

The auto-centering feature for the main (steering) rudders and the flanking rudders can be overridden by the operator by activating the 'electronic jockey bar' feature.

D. SYSTEM MODES

A selector switch shall be installed on the pilothouse console allowing the operator to select one of the three different modes of operation for the steering system. Those modes are full follow-up mode, override mode, and jog mode.

The modes are defined as follows:

- If full follow-up (FFU) mode is selected, the electrical interlocks are enabled between the pair of steering rudders (the astern interlock) and the pair of flanking rudders (the ahead interlock). The vessel then responds as described above.
- If the override (OVR) mode is selected, the electrical interlocks are disabled. In the override mode, the vessel's steering responds in the normal towboat style.
- If the jog (JOG) mode is selected, the steering system operates in a non-follow-up mode. There are no interlocks enabled. The vessel is then steered using the jog levers in the pilothouse, with individual jog levers controlling each pair of main rudders (port or starboard) and each pair of flanking rudders (port or starboard).

E. EQUIPMENT

1. Hydraulic Power Packs

The Contractor shall provide and install two hydraulic power units located in the steering gear room. One power unit shall serve the main (steering) rudder system with the second unit serving the flanking rudder system.

Each power unit shall be equipped with two electric motors, with each motor powering dual integrated pumps. The pumps shall be dual stacked of the positive displacement type. The outlets from each pump shall be plumbed to separate cylinders in order that differing loads on the port and starboard rudder pairs do not result in different rudder speeds.

One motor and dual pump set shall be sized to fully supply the cylinders in its respective (flanking or steering) rudder system. The second motor and dual pump set on the hydraulic power unit shall be a back-up to the first motor and dual pump set on the hydraulic unit.

The motors on the hydraulic units shall be electrically driven, with each motor set up on a separate motor controller, powered from the 480 volt AC system.

A hydraulic oil temperature gauge shall be mounted on each hydraulic unit.

A 2-inch deep drip pan shall be fabricated around each hydraulic power unit. The hydraulic fluid used in the systems shall be biodegradable.

2. Cylinders

A cylinder shall be provided for each pair of flanking rudders and steering rudders. The cylinders provided shall be of the unbalanced type.

3. Steering & Flanking Levers

Two paired sets (port and starboard) of "stacked" steering and flanking levers shall be provided in the pilothouse. Both steering levers shall be linked mechanically to move simultaneously. Similarly, both flanking levers shall be linked mechanically to move simultaneously.

Jog levers for the flanking and steering rudders shall also be installed in the pilothouse. The jog levers allow for operation in the non-follow-up mode.

4. Rudder Angle Indicators

Dial type rudder angle indicators shall be provided and installed in the pilothouse, two for the main (steering) rudders and two for the flanking rudders. The rudder angle indicators installed in the pilothouse shall be furnished with lights and dimmer switches.

5. Piping

All hydraulic piping and fittings shall be socket welded steel, schedule 40, minimum.

All valves shall be steel, ASTM A-216.

6. Instrumentation, Alarms, & Selector Switches

The Contractor shall provide and install the following main system controls in the pilothouse:

Off-on switches and selector switches for operating the hydraulic pumps.
Pump running indicator lights for each pump.
Steering Mode Selector Switches.

Contractor shall provide and install alarm panels in the pilothouse, engineer's workshop, and the steering gear room. The panels shall omit visual and audible alarms. Alarm silencing buttons shall be installed at each panel.

F. CONTROLS, ALARMS & INSTRUMENTATION

The Contractor shall provide and install a steering system control and alarm panel in the pilothouse. The panel shall contain the following:

- Off-on switches and selector switches for operating the hydraulic pumps
- Motor running indicator lights for each motor
- Steering Mode Selector Switches
- System alarms

The steering system alarms provided in the pilothouse shall be in accordance with the ABS River Rules, Section 4/3.2.14 and shall also include a loss of hydraulic system pressure alarm. The alarms provided shall be visual and audible. Alarm silencing buttons shall be installed for the panel.

The Contractor shall provide and install steering system alarm panels in the engineer's workshop and the steering gear room. The alarm panels supplied shall mimic the alarms required above. Each panel shall also omit visual and audible alarms and be provided with alarm silencing buttons.

The alarm panel located in the engineer's control room shall also incorporate motor running indicator lights for each motor.

C630 FUEL OIL SYSTEM

A. GENERAL REQUIREMENTS

For each vessel, the Contractor shall provide and install all pumps, filters, piping, hoses, and valves necessary to form a complete fuel oil system. The system shall serve the main engines and diesel generator sets, and have the capability of transferring fuel between the fuel oil tanks, including the day tank.

All fuel oil piping shall be seamless black steel, A106.

B. FUEL OIL TANKS

See Clauses C130 and C320 for fuel oil tank capacities and details of the construction of the fuel oil tanks.

C. VENTS, SOUNDS & FILLS

All vents, sounds, and fills shall be installed outside of the deckhouse.

The main fuel oil tanks shall be filled via a fuel manifold, located in the forward machinery space. The tank fills shall be through a 3-inch nominal line. The tank fills shall be located port and starboard in spill containments. Each fuel fill shall terminate 18 inches above the deck with a bronze screw cap labeled "FUEL."

Each main fuel oil tank shall be fitted with a 4-inch vent that terminates in a gooseneck and is fitted with a corrosion-resistant flame screen.

The fill stations shall be located, port and starboard, between Frame #30 and #32. The fills and vents shall terminate inside permanent spill containment boxes that entirely enclose the vents and fills. The box shall be fitted with a watertight door fitted with a hasp and padlock. Each door shall incorporate a rain lip and air passage for ventilating the enclosure when the door is closed.

Each main fuel oil tank shall be fitted with a 1-1/2 inch sounding tube. Each sounding tube shall be run as straight as practical and located at the lowest part of the tank. The sounding tube shall be of the flush mount type, with tee wrench. At the tank bottom there shall be installed a 6 inch x 6 inch striking plate of at least 3/16 inch thickness, seal welded to the tank bottom.

A sounding tape and plumb bob shall be supplied for each vessel in order to sound the tanks.

The forward and aft day tanks shall each be fitted with vents that terminate 18 inches above the main deck. The vents shall be located in spill containments fitted with watertight, hinged lids, hasps, and padlocks. Each lid shall incorporate a rain lip and air passage for ventilating the enclosure when the lid is closed.

D. STRIPPING CONNECTIONS

A 1-inch (nominal) pipe drain, with a gate type shut-off valve shall be fitted approximately ½ inch from bottom of each main fuel oil tank, the forward day tank, and the aft day tank at the end nearest the lower engine room.

E. SUPPLY & RETURN LINES

The Contractor shall install supply and return lines for each main engine and each diesel generator set engine. The size of the lines installed shall be in accordance with the engine manufacturer's requirements for the engines selected.

For the main engines, fuel shall be supplied from and returned to the forward fuel oil day tank. The fuel return lines shall be fitted with fuel oil coolers. High and low fuel oil suctions shall be provided in day tank. The high suction shall be approximately 9 inches above the tank bottom, and the low shall be approximately 3 inches above the tank bottom.

For the diesel generator engines, fuel shall be supplied and returned to the aft day tank. The fuel return lines shall be fitted with fuel oil coolers. The return headers from the engines shall enter the day tanks at the end of the tank opposite from the exits for the fuel supply headers. The return headers shall also be installed as high as possible in the fuel oil tanks.

The Contractor shall be responsible for sizing, providing, and installing ABS and USCG approved flexible connections between each main engine and each diesel generator for connecting to the fuel supply headers and fuel return headers. The flexible connections supplied shall also meet the engine manufacturer's specifications.

F. EMERGENCY SHUT-OFF VALVES & ISOLATION VALVES

Each tank connection subject to a static head of fuel shall have a shut-off valve at the tank with a remote operated reach-rod operable from the outside the house on the main deck level. The reach-rods shall run as directly as possible to the shut off valves to avoid problems with the U-joints.

Additional ball valves shall be installed for the fuel oil system in order to allow for isolating the system for maintenance and repair.

G. FUEL OIL TRANSFER SYSTEM

The fuel oil system shall facilitate transfer of fuel oil between the main fuel oil tanks and allow for the filling of the forward and aft day fuel oil tanks. The transfer system consists of a manifold, knife-edge strainer, fuel transfer pump, and piping.

A positive displacement fuel oil transfer pump and motor, similar to an Oberdorfer, shall be provided and installed.

An emergency stop button for stopping the fuel oil transfer pump shall be installed at Frame #38, port side as well as at the fuel transfer station in the forward machinery space. The buttons shall be used in case of overfilling of the tanks while transferring fuel or in case of a fire.

A manually operated, CUNO "Auto Klean" knife-edge strainer shall be provided and installed on the inlet side of the fuel oil transfer pump. The CUNO filter to be supplied shall be similar to type EG.

The CUNO "Auto Klean" knife-edge strainer shall be provided with a pipe drain with a shut-off type valve and pipe cap in place of the drain plug. There shall be sufficient space for a small metal container to be placed under the drain.

All transfer lines shall be installed approximately 6 inches from the bottom of the fuel oil tanks.

H. TANK GAUGING & FILL ALARMS

The main fuel oil tanks and the day tanks shall be fitted with a liquid level gauge similar to a KENCO model 9900 series level gauge with integral valves. The liquid level gauges shall have all stainless steel construction and each gauge shall be calibrated to show ¼ tank level, the ½ tank level, and the ¾ tank level.

For each main fuel oil tank, a remote reading tank capacity gauge shall be installed in the engineer's workshop. The gauges shall give the amount of fuel remaining in each main fuel oil tank in gallons.

For the forward and aft fuel oil day tanks, low level alarms shall be installed. A warning shall sound at a tank capacity of 25% and low alarm at a capacity of 10%. The alarms shall be audible and visual and shall be recorded at alarm panels located in the engineer's workshop and at the pilothouse console.

Alarm panels shall be installed at each fuel fill station, the fuel transfer station in the forward machinery space, and the engineer's workshop to report a high tank level in the main fuel oil tanks. Audible and visual alarms shall be received at these panels with a warning sounding at a tank capacity of 90% and a high alarm at a capacity of 95%.

I. PRIMARY FUEL FILTERS

The fuel oil supply lines to each main engine and each diesel generator set shall be equipped with individual duplex RACOR fuel filters/water separators.

The Contractor shall be responsible for sizing, providing, and installing the RACOR filters based on the main engines and diesel generators selected. The RACOR filters supplied shall meet the engine manufacturer's specifications.

The RACOR filters shall be mounted so a 5-gallon bucket can be placed under the filter. The bucket shall rest on a tray or pan 24 inches by 24 inches with 6-inch deep sides.

C635 LUBE OIL SYSTEM

A. GENERAL REQUIREMENTS

For each vessel, the Contractor shall provide and install all components, piping, and valves necessary to form a complete lube oil system. The lube oil system shall supply clean lube oil to the main engines, gears, and generator diesel engines.

All lube oil piping shall be seamless black steel, A106.

The lube oil tank(s) shall be sized and constructed of welded steel in accordance with Clauses C130 and C320.

The main engine and generator engine sumps shall be fitted with quick disconnects in accordance with Clause C605 and Clause C733 of the contract.

B. TANKS, FILL & VENT CONNECTIONS

A non-integral tank shall be sized and constructed to hold lube oil. See Clause C320 for details of the tank's construction. The tank shall be fitted with a mechanical gage for reading the tank's liquid capacity.

The tank shall be equipped with a 1-1/2 inch fill and 2-inch vent. The fill and vent shall terminate 18 inches above the main deck. The fill line shall be run straight in order to also serve as a sounding pipe. The fill shall be fitted with a bronze screw cap and safety chain. The fill line shall be clearly labeled for its use.

The vent shall terminate in a gooseneck and be fitted with a corrosion-resistant flame screen.

The fill and vent shall terminate in a permanent spill containment box that entirely encloses the vent and fill. The box shall be fitted with a watertight, hinged lid fitted with a hasp and padlock. Each lid shall incorporate a rain lip and air passage to ventilate the enclosure.

C. DRAIN CONNECTION

A 1-inch (nominal) pipe drain, with a shut-off valve and pipe cap, shall be fitted at the lowest point of the lube oil tank. The drain shall be arranged so that a oil can or 5-gallon bucket can be placed beneath it.

D. LUBE OIL TRANSFER SYSTEM

The Contractor shall supply and install a gear pump, similar to an Aeroquip FLOCS 15 for transferring fuel from the lube oil tank to the main engines and generator sets. The pump shall be located so that it can service the main engines and the generator set engines. A y-strainer shall be provided on the suction side of the pump.

The lube oil transfer system shall be hard piped to the vicinity of the engine sumps and terminate at ball valves with quick disconnect couplings. The Contractor shall supply lengths of hose to connect the lube oil system from the valves to the engine sump connections.

C636 WASTE OIL SYSTEM

A. GENERAL REQUIREMENTS

For each vessel, the Contractor shall provide and install all components, piping, pumps, and valves necessary to form a waste oil system. The waste oil system shall be provided to collect oil from the main engines, gears, and generator set engines without draining into the bilges.

B. TANK FILL, VENT & STRIPPING CONNECTIONS

The waste oil tank shall be fitted with a liquid level indicator. The waste oil tank shall be designed and constructed of welded steel in accordance with Clauses C130 and C320.

A 1-1/2 inch pump out line shall be installed in the waste oil tank and shall terminate 18 inches above the deck with a bronze screw cap. The pump out line shall be run straight in order to also serve as a sounding pipe.

A 2-inch vent, with corrosion-resistant flame screen, shall also connect to the waste oil tank.

The tank pump out line and vent shall terminate in a permanent spill containment enclosure on the main deck. The enclosure shall be fitted with a watertight, hinged lid. The lid shall incorporate a rain lip and air passage to ventilate the enclosure.

A ¾- inch nominal pipe with pipe plug shall be fitted at the lowest point possible for the waste oil tank. This line shall be used for tank cleaning purposes.

C. SYSTEM CONFIGURATION

For each vessel, the Contractor shall supply and install an air-operated double diaphragm pump similar to a Wilden to be used to pump out the sumps. The pump shall be portable to allow for pumping out the main engines, gears and diesel generator set engines.

Hard piped connections shall be installed in the generator room and the lower engine room. The connections shall terminate with a ball valve and quick disconnect coupling to allow for attaching the pump. Sections of hose with fittings shall be supplied to enable attaching the pump to the sumps and the hard piped waste oil system.

C637 OILY BILGE SYSTEM

A. GENERAL REQUIREMENTS

The Contractor shall provide and install an oily bilge system consisting of an oily water tank, liquid level indicator, an oily bilge pump, piping, and oil removal system. There shall be no oily water separator. The system shall be provided to collect oily water from the main engine drip pans and from the lower engine room bilges to the oily bilge tank. The system shall also be capable of pumping to a shore connection.

The oily bilge tank shall be designed and constructed in accordance with Clauses C130 and C320. The oily tank shall be fitted with a liquid level indicator.

The oily water bilge pump shall be a self-priming and shall be capable of taking suction from any main engine drip pan or any bilge in the lower engine room. The pump shall discharge directly into the oily water holding tank located in the lower engine room. The pump shall be capable of pumping approximately 20 gpm.

The Contractor shall provide an anti-static hose for the pump capable of reaching all of the main engine drip pans and all of the bilges in the lower engine room.

B. TANK, VENT & STRIPPING CONNECTION

A 1-1/2 inch pump out line shall be installed in the oily bilge water tank and shall terminate 18 inches above the deck with a bronze screw cap. The pump out line shall be run straight in order to also serve as a sounding pipe.

A 2-inch vent, with corrosion-resistant flame screen, shall also connect to the oily bilge water tank.

The tank pump out line and vent shall terminate in a permanent spill containment enclosure on the main deck. The enclosure shall be fitted with a watertight, hinged lid. Each lid shall incorporate a rain lip and air passage to ventilate the enclosure.

A ¾-inch pipe with pipe plug shall be fitted at the lowest point possible for the tank. This line shall be used for tank cleaning purposes.

C640 ENGINE COOLING SYSTEM

A. CONTRACT DRAWINGS

CLIN 0001
557-B205-01, OUTBOARD PROFILE
557-B215-01, GENERAL ARRANGEMENT

CLIN 0002, CLIN 0003, CLIN 0004
556-B205-01, OUTBOARD PROFILE
556-B215-01, GENERAL ARRANGEMENT

B. SYSTEM SIZING REQUIREMENTS

Approximate locations for the grid coolers are shown on the above listed contract drawings. During Detailed Design, the Contractor shall perform engineering to size the engine cooling pumps and coolers based on the final selection of the main propulsion engines and gears, and the diesel generator engines. The coolers shall be sized in accordance with the engine and gear manufacturers' recommendations. The Contractor shall submit calculations for the sizing of all engine coolers.

The coolers shall be sized as follows:

For the main propulsion engines and gears, the engine cooling pumps and grid coolers shall be sized to cool the full engine horsepower at a vessel forward speed of 1 knot and the water temperature of 85 degrees F. Separate coolers shall be supplied for the jacket water coolers and the aftercoolers in accordance with the engine manufacturer's requirements.

For the generator set diesel the engines, the cooling pumps and grid coolers shall be sized to cool the full generator outputs at a vessel forward speed of 0 knots and the water temperature of 85 degrees F.

C. COOLER REQUIREMENTS

The Contractor shall provide and install grid coolers similar to Fernstrum. The grid coolers shall be set up with the following features:

- Each grid cooler shall be double pass.

- Each grid cooler shall be of the thru-hull type with special gasket kits for installation.

- The circulating mixture shall be 50 percent water and 50 percent ethylene glycol by volume.

- Each grid cooler shall be rugged all welded (or brazed) construction.

- The grid cooler recesses shall be configured in accordance with the cooler manufacturer's requirements. Sloped ends shall be provided in the recesses.

- The outboard faces of the grid coolers shall be recessed at least 3 inches inside of the surrounding hull surfaces.

- Bar type cooler guard grates, removable with minimum ½ inch diameter stainless steel bolts and nuts, shall be installed over all grid coolers.

- Provided with auxiliary expansion tanks and/or larger jacket water pumps if required to handle the cooling system volume.

Flexible hose connections for the cooling water on the main engines, gears, and the diesel generator set engines shall be suited for temperatures up to 250 degrees F and pressure to 20 psig.

D. PIPING & VALVES

All piping shall be steel, non-galvanized with welded joints and fittings. The piping shall incorporate drains to allow for removing\adding coolant and to allow for working on the coolant system.

Bolted flanges shall be fitted to permit removal of pipe sections at the engine and cooler connections.

Flanged stainless steel ball type shut-off valves shall be furnished and installed at both the inlet and outlet connections to the external grid coolers. The ball valves shall have operating handles fitted with stops or detents for open and closed positions to indicate valve open and valve closed positions.

The low point of each cooling system shall be fitted with a stripping connection to allow for the draining of the cooling system.

E. GRID COOLER VENTS

All cooling systems shall be vented at the main deck level to allow for removal or bleeding off of trapped air from the cooling systems. Vents shall be equipped with ball type shut-off valves that may be locked in the closed position. The vents shall terminate at a height of 18 inches above the main deck.

All grid cooler recessed pockets shall be vented to allow entrapped air in the pockets to escape.

C650 ENGINE EXHAUST SYSTEMS

A. SYSTEM SIZING REQUIREMENTS

During Detailed Design, the Contractor shall perform engineering to size the engine exhaust systems based on the final selection of the main propulsion engines, and the diesel generator set engines. The systems shall be designed and sized not to exceed the engine manufacturer's required maximum back pressure. System installations shall be in strict accordance with the engine manufacturers' recommendations.

B. EXHAUST SYSTEM REQUIREMENTS

Each exhaust system shall be independently routed from each engine exhaust outlet through the upper deck openings and up into its respective stack. Exhaust piping in way of the upper deck opening is to be supplied with a sufficient number of take down joints or bolted connections to facilitate a clear opening when removed. The silencer for each engine shall be located in its respective stack.

Each silencer shall be similar to a Nelson 300 attenuation level 300 model. Each silencer shall have the following features:

- 35-db reduction minimum.
- Spark arrestor.
- High temperature corrosion resistant exterior coating.
- Brackets for mounting the mufflers inside the stacks.
- Cleanouts piped to an accessible location.

The silencers and exhaust line flanges shall be to ASA 125 lb standards complete with high temperature gaskets and bolts.

Suitable flanged adapters shall be provided and installed at each engine exhaust outlet. Pipe taps, 1/4 inch, shall be provided near each engine outlet to allow for the checking of the system backpressure. Steel plugs shall be provided for each tap. The

Contractor is required to provide the equipment necessary and to test each system's backpressure at the exhaust elbows during tests and trials. See contract Section E.

Flanged, lined stainless steel expansion sections shall be provided, and shall be sized and located in order to prevent over stressing of the engine connecting flanges, anchor points, and piping. The joints shall use multi-ply bellows construction.

C. EXHAUST SYSTEM FEATURES

The piping runs between each main engine and diesel generator set engine silencer outlet and the "ends" shall incorporate the following:

- Rain proof slip joint seals at the stack top exhaust pipe penetrations.
- A 45-degree elbow and a 45-degree mitered pipe, facing up aft, and outboard.
- The exhaust pipe and fittings above the silencers shall be stainless steel.

Each exhaust system "up to and including" the silencer shall be suitably insulated. The insulation shall be a non-asbestos type similar to CLAREMAT 1200 insulating blanket. The insulation thickness shall be such that the surface temperature of the insulation does not exceed 125 degrees F. The insulation surface shall be covered by CLARTEX 1925 A557 pad fabrics. The pad fabrics shall be held in place with lacing hooks and lacing wire.

C660 BILGE & BALLAST SYSTEM

A. CONTRACT DRAWINGS

CLIN 0001
557-B130-01, TANK CAPACITY PLAN
557-B245-01, HOLD & MACHINERY ARRANGEMENT

CLIN 0002, CLIN 0003, & CLIN 0004
556-B130-01, TANK CAPACITY PLAN
556-B245-01, HOLD & MACHINERY ARRANGEMENT

B. DESCRIPTION OF WORK

Each vessel shall be furnished with a separate bilge system for dewatering compartments and a separate ballast system for trimming out the vessel. There shall also be sump pumps provided to remove water from beneath the stuffing boxes.

C. BILGE SYSTEM

The Contractor shall provide and install all pumps, manifolds, strainers, valves, piping, and gauges necessary to form a complete clean bilge system for each vessel. The oily bilge system is described in contract Clause C637.

The clean bilge system shall be designed and installed in accordance with ABS rules. The system is a fixed system configured to remove water from all watertight compartments, voids, and the inner bottom beneath the main fuel oil tanks and the fuel oil service tank. The clean bilge system shall serve:

- Forward Stores
- Fuel Oil Tank Innerbottom
- Forward Machinery Space
- Port Cooler Void
- Starboard Cooler Void
- Lower Engine Room
- Shaft Alley
- Aft, Port Void #1
- Aft, Starboard Void #1
- Aft, Port Void #2
- Aft, Starboard Void #2

Each subdivision has an independent bilge suction. Each bilge suction shall be protected by a suction strainer located at the low point of each compartment. Each suction strainer shall have a clear opening three times the total area of the connected suction pipe. The clean bilge system discharges the water overboard through a discharge located at least 12 inches above the full load waterline.

The Contractor shall provide and install a bilge suction manifold or series of stop-check valves. Also acceptable will be gate valves with check valves arranged in a fabricated manifold. The manifold shall be located in the same space as the bilge pump it normally serves, and shall be capable of being locally controlled and easily accessible at all times.

The Contractor shall supply and install two bilge pumps similar to those manufactured by Crown (Barnes Pumps). Each pump shall be a self-priming, centrifugal pump having ABS type approval. The pumps shall be electric drive type, with the pumps and motors furnished as matched sets from the pump manufacturer. The motor controllers for the pumps shall be set-up with low voltage release. See contract Clause C750.

The Contractor shall submit a system curve and calculations (including NPSH calculations) to the COR for review and acceptance during the Engineering Phase of the contract before procuring the pumps.

D. BALLAST SYSTEM

The Contractor shall provide and install a pump, manifold, strainers, valves, piping, and gauges necessary to form a complete ballast system for each vessel. The ballast system shall be designed and installed in accordance with ABS rules. Each vessel contains five ballast tanks:

- Forward Ballast Tank
- Port Ballast Tank #2
- Starboard Ballast Tank #2
- Port Ballast Tank #3
- Starboard Ballast Tank #3

The ballast system shall be set up for the following operations:

- Filling ballast tanks
- Discharging ballast tanks overboard
- Transferring water between ballast tanks

The ballast system shall be set up to take in water through one of the sea chests. The system shall discharge water overboard through a discharge located at least 12 inches above the full load waterline.

Discharge/suction gate valves shall be installed to allow the tanks to be lined up to the discharge or suction of the ballast pump. A duplex strainer, similar to a Mueller model #692 shall be installed on the inlet side of the ballast pump that is connected to the sea chests.

The ballast pump installed shall be similar to an Ingersoll-Dresser, type D-800. The pump shall be a self-priming, centrifugal pump with bronze impeller. The pump shall be electric drive type, with the pump and motor furnished as a matched set from the pump manufacturer. The motor controller for the pump shall be set-up with low voltage protection. See contract Clause C750.

E. BALLAST TANKS

The ballast tanks shall be constructed in accordance with contract Clause C320. Each ballast tank shall be equipped with a:

- Tank filling line. The size of the lines shall be determined by the Contractor during Final Design.

- Vent with flame screen. Each tank vent size shall be at least 125% of the effective area of the filling line selected above.

- 1-1/2 inch sounding tube. The sounding tube shall be as straight as practical and located at the lowest part of the tank, where practicable. The sounding tube shall be of the flush mount type, with tee wrench. At the tank bottom there shall be installed a 6 inch x 6 inch striking plate of at least 3/16 inch thickness, seal welded to the tank bottom.

F. SHAFT STUFFING BOX SUMP PUMPS

The Contractor shall provide and install in an automatic sump pump similar to a Rule, model 2800 in each sump. The pumps shall be powered from the vessels 120 volt AC system. Separate overboard discharge lines shall be provided for each sump pump. Each overboard discharge shall be located approximately 12 inches below the main deck.

C665 POTABLE WATER SYSTEM

A. CONTRACT DRAWINGS

CLIN 0001
557-B130-01, TANK CAPACITY PLAN
557-B245-01, HOLD & MACHINERY ARRANGEMENT

CLIN 0002, CLIN 0003, CLIN 0004
556-B130-01, TANK CAPACITY PLAN
556-B245-01, HOLD & MACHINERY ARRANGEMENT

B. DESCRIPTION OF WORK

Potable water shall be distributed throughout each vessel from the potable water tanks located in the forward stores. The vessel shall take on potable water from an off-vessel source.

The Contractor shall provide and install all components, piping, valves, and vents necessary to form a complete potable water system. All components supplied for the system shall be sized to fit through a USCG standard 28 inch x 60 inch clear opening watertight door with 6 inch radius corners.

C. DISTRIBUTION SYSTEM REQUIREMENTS

A potable water distribution system shall be supplied and installed to provide service to all fixtures on the vessel requiring potable water. The system installed shall comply with all applicable guidelines set forth by the U.S. Public Health Service. The system shall be arranged so that the entire system can be gravity drained for cold weather lay-up.

Cold-water service shall be supplied to all sinks, showers, toilets, hot water heaters, icemakers, the washing machine, dishwasher, water fountain, and the hose bibbs located in throughout the vessel.

Hot water service shall be supplied to all sinks, showers, the washing machine, and the dishwasher.

Piping material from the tanks to the pressure sets shall be stainless steel. From the pumps to the remainder of the system the piping material shall be ASTM B-88, type K, seamless copper. The solder connections shall be lead free.

To assist in maintenance and repair, shut-off valves shall be supplied and installed at all hot and cold water piping outlets including the sinks, toilets, showers, dishwasher, washing machine, ice machine, and refrigerator/freezer icemakers. These valves shall be quarter-turn ball valves, with each being easily accessible without special tools.

Since all the vessels operate in cold climates, no piping shall be run on or against exterior bulkheads. All potable water-piping running through unheated spaces shall be heat traced and insulated. All hot water piping shall be insulated.

The Contractor shall install the piping with flexible connections where it transitions from the floating deckhouse into the hull or aft deckhouse. Care shall be taken to insure that the piping does not freeze in the spring void beneath the floating deckhouse.

D. POTABLE WATER PRESSURE SETS

Two potable water pressure sets with pumps shall be provided and installed with all required pressure switches, pressure gauges, and pressure relief valves. The system shall be set up requiring only the use of one pressure set. The second pressure set shall be a back-up unit.

The potable water system shall be set up such that the pressure sets cut in at 40 psi (low pressure cut-in) and cut out at 60 psi (high pressure cut-out).

The pressure sets shall be furnished with a precharged water tank with a minimum capacity of 96 gallons. The precharged water tanks should be supplied with a relief valve, which is capable of discharging the full output of the pumps. Each pump shall have a capacity of no less than 15 gpm at a pressure of 60 psi.

E. WATER FILTERS

1. Tank Inlet Filters

In-line water filters for removing dense particles (sand, rust, grit) and sediment shall be installed between each fill station and each potable

water tank. The filters shall be located in order to allow ease of access for changing and maintaining the filter elements or cartiridges.

The filter housing shall have 1-1/2 inch inlets and outlets. A dedicated spanner wrench shall be supplied with the filter housings to assist in changing the filter elements or cartridges.

The filter elements or cartridges supplied shall be capable of removing particles that are a nominal 50 micron and larger. Each filter or set of filters shall be capable of filtering upto 40 gpm of water at 100 psi.

2. Tank Outlet Filters

The outlet of each potable water tank shall be fitted with a high flow, heavy-duty whole house water filter similar to an Aqua-Pure. The filter shall be outfitted with filter cartridges that that treat the water for taste\odor\chemicals.

F. HOT WATER HEATERS

1. CLIN 0001, CLIN 0003 & CLIN 0004

Two, 85-gallon, dual element, electric water heaters shall be provided complete with all accessories shall be provided. One unit shall serve the main deck and the other shall be located above the main deck and serve all decks above the main deck. The heaters shall be wired for 480 volt AC, 3-phase with 3000-watt elements. The heaters shall have a recovery rate of at least 36 gal/hr at 100 degree F temperature rise. The units shall be supplied with an automatic temperature control adjustable to 180 degree F.

2. CLIN 0002

One, 85-gallon, dual element, electric water heater shall be provided complete with all accessories. The unit shall be located in the area of the pressure set. The heater shall be wired for 480 volt AC, 3-phase with 3000 watt elements. The heater shall have a recovery rate of at least 36 gal/hr at 100 degree F temperature rise. The unit shall be supplied with an automatic temperature control adjustable to 180 degree F.

G. POTABLE WATER TANKS

The potable water tanks are described in contract Clause C320. Each potable water tank shall be equipped with a:

- Liquid level indicator similar to a GEMS SureSite. The indicator shall be of all stainless steel construction and shall be suitable for potable water service. Each gauge shall be calibrated to show ¼ tank level, the ½ tank level, and the ¾ tank level.

- 1-inch drain with ball valve and pipe cap shall be installed on each tank to allow for the draining of the tanks. Each tank's stripping connection shall be fitted at the lowest point of each tank.

A 1-inch drain with ball valve and pipe cap shall be installed on each tank to allow draining of the tank.

A backflow-preventer shall be installed between the potable water tanks and the pressure sets.

H. POTABLE WATER FILL STATIONS

The Contractor shall provide and install a 1-1/2 inch potable water fill and 2 inch vent for each potable water tank. The potable water filling stations shall be located on the main deck on the port and starboard sides of the deckhouse.

At each filling station, the fill line shall terminate with a brass screw cap fastened by a chain to an adjacent bulkhead or fixture in such a manner that the cap will not touch the deck when hanging free. The filling connection shall be clearly marked by means of 1/2-inch lettering (minimum), stamped on a non-corrosive label plate, or equivalent.

Enclosures shall be provided for each fill with lockable hinged doors with staples to hold them open. Each door shall be provided with gaskets to prevent the intrusion of water.

Padlocks with three keys, similar to those manufactured by MASTER LOCK, shall be provided to lock each filling station enclosure.

I. HOSE BIBBS & FIXTURES

All fixtures (sinks, etc) are described in Clause C437.

The Contractor shall supply and install freeze-proof hose bibbs in the following locations:

Deck Level	Frame #	Location
Pilothouse	23	Aft
Upper Deck	23	Stbd
Upper Deck	26	Port
Main Deck	24	Stbd
Main Deck	28	Port
Main Deck	47	Port
Main Deck	47	Stbd

For the CLIN 0002, CLIN 0003, and CLIN 0004, a hose bibb shall also be installed on the Texas Deck at Frame #22, port.

The freeze-proof hose bibbs shall be 5/8 inch with each hose bibb outfitted with a vacuum breaker.

Interior hose bibs shall also be installed in the machinery space and in the lower engine room. Each hose bibb furnished shall be 5/8 inch with each hose bibb outfitted with a vacuum breaker.

C667 SANITARY & SEWAGE SYSTEM

A. CONTRACT DRAWINGS

CLIN 0001
557-B130-01, TANK CAPACITY PLAN
557-B215-01, GENERAL ARRANGEMENT
557-B233-01, PILOTHOUSE DETAILS
557-B245-01, HOLD & MACHINERY ARRANGEMENT

CLIN 0002, CLIN 0003 & CLIN 0004
556-B130-01, TANK CAPACITY PLAN
556-B215-01, GENERAL ARRANGEMENT
556-B233-01, PILOTHOUSE DETAILS
556-B245-01, HOLD & MACHINERY ARRANGEMENT

B. DESCRIPTION OF WORK

For each vessel, the Contractor shall provide and install all components, piping, valves, and vents necessary to form a complete sanitary and sewage system. The sanitary and sewage system shall comply with all applicable guidelines set forth by the U.S. Public Health Service.

The sanitary and sewage system shall be set up to allow for:

- Treating both gray and black water
- Overboard discharge of treated water where allowable
- Retention of treated water
- Retention of untreated black and\or gray water

All fixtures connected to the sanitary and sewage system are described in contract Clause C437.

C. SYSTEM CONFIGURATION & REQUIREMENTS

1. General Requirements

The system consists of two separate sections; a gray water section and a black water section. Each system shall be piped separately to the onboard sewage treatment plant.

All horizontal drain and sewer piping shall be installed with a slope of ¼ inch per foot and use the minimum number of elbows. The system shall also be installed with cleanouts and low point drains, and be arranged so that the entire system can be gravity drained for cold weather lay-up.

The Contractor shall install the piping with flexible connections where it transitions from the floating deckhouse into the hull or aft deckhouse. Care shall be taken to insure that the piping does not freeze in the spring void beneath the floating deckhouse.

2. Black Water Service

Black water is collected from the water closets and urinals. Water closets are located on the pilothouse deck, the Texas deck, upper deck and main deck levels. Two urinals are located on the main deck level.

The Contractor shall provide and install vent piping for all water closets and urinals. The vent piping may be run common where possible with each vent fitted with a flame screen.

The black water piping shall be routed directly from the water closets and urinals to the treatment plant. There shall be an emergency by-pass line installed that allows for directing untreated black water to the sewage holding tank in the case that the treatment plant is out of service.

3. Gray Water Service

Cast brass "P" traps with clean outs, shall be provided and installed in the drain lines from the stateroom and toilet space sinks, the utility sinks, the ice makers, the showers, and the pilothouse sink. Traps shall be provided on all other fixtures where so recommended by the fixture manufacturer.

The Contractor shall supply and install 1-1/2 inch nominal deck drains in each toilet space and a 2-inch nominal deck drain for the Laundry Room for CLIN 0002, CLIN 0003, and CLIN 0004. All deck drains furnished shall have steel bodies with removable bronze strainer plates and shall have a 2:1 ratio of strainer open area to pipe area. All deck drains shall be connected to the gray water system.

Gray water is also collected from the sinks, showers, water fountain, and the washing machine. There is a sink at the pilothouse deck level, and there are sinks and showers on the Texas deck, upper deck, and main deck levels. The washing machines are located on the main deck level. There is also gray water collected from the galley sink with waste disposer, dishwasher, and two ice machines. This equipment is located on the main deck level.

The Contractor shall provide and install vent piping for the gray water drain lines. The vent piping may be run common where possible with each vent fitted with a flame screen.

The system shall be set up to run into a common line that directs the gray water to the treatment plant. There shall be an emergency by-pass line installed that allows for directing the untreated gray water to the gray water holding tank in the case that the treatment plant is out of service.

D. SEWAGE TREATMENT PLANT

The Contractor shall supply and install an on-board sewage treatment system for treating both the black and gray water generated on the vessel from a 16-person crew. The system installed shall be similar to an Owens Kleen Tank meeting the following requirements:

- The unit supplied shall meet the effluent requirements in order to meet USCG/IMO Certification.
- Provided with a stainless steel media tank.
- Provided with a regenerative turbine blower.
- Set-up to receive water directly from the black and gray water systems.
- All components supplied for the system shall be sized to fit through a USCG standard 28 inch x 60-inch clear opening watertight door with 6-inch radius corners.

The treatment plant shall be set-up to discharge treated water to:

- overboard.
- the sewage holding tank.
- the gray water tank.

The routing of the treated water shall be at the operator's discretion.

The Contractor shall provide and install all vents required by the treatment plant manufacturer for proper operation of the equipment. Power for the equipment shall be supplied from the 480/208Y/120 volt system.

Compressed air from the compressed air system shall be supplied to the treatment plant in accordance with the manufacturer's recommendations. The Contractor is responsible for all piping, valves, pressure reducers, etc required to connect the compressed air system to the treatment plant.

E. HOLDING TANKS

The sewage holding tank and the gray water holding tank shall be constructed in accordance with contract Clause C320. The sewage holding tank and the gray water holding tank each shall be equipped with a:

- liquid level gauge similar to a KENCO model 9900 series level gauge with integral valves. Each gauge shall be calibrated to show ¼ tank level, the ½ tank level, and the ¾ tank level.

- 2-inch stripping connection to allow the pumping out of each tank at dockside. Each tank's stripping connection shall be fitted at the lowest point of each tank.

- 2-1/2 inch vent. Each vent shall be fitted with a flame screen.

- 1-1/2 inch sounding tube. The sounding tube shall be as straight as practical and located at the lowest part of the tank, where practicable. The sounding tube shall be of the flush mount type, with tee wrench. At the

tank bottom there shall be installed a 6 inch x 6 inch striking plate of at least 3/16 inch thickness, seal welded to the tank bottom.

The fire main shall be interconnected to both the sewage holding tank and the gray water holding tank to allow for the flushing of the tanks during stripping operations. The flushing line shall be installed as specified in contract Clause C675.

F. TANK STRIPPING PUMP

The Contractor shall supply and install a stripping pump similar to a MP\Jaeger Pumps, model #2CT trash pump. The pump shall be capable of passing 1-1/2 inch diameter solids, maximum.

The discharge line from the pump shall terminate at the main deck level, 18 inches above the deck. The deck connection shall be fitted with a bronze screw cap and safety chain. The discharge line shall be clearly labeled for its use.

C669 DRAINAGE SYSTEM

A. DRAWINGS

Reference Drawing #518-D669-01, DRAINAGE SYSTEM

CLIN 0001
557-B215-01, GENERAL ARRANGEMENT

CLIN 0002, CLIN 0003 & CLIN 0004
556-B215-01, GENERAL ARRANGEMENT

B. DESCRIPTION OF WORK

The Contractor shall provide and install all components, piping, deck drains, and valves necessary to form a complete drainage system. The reference drawing is provided as general guidance for installing the drainage system.

For the Pittsburgh District towboat (CLIN 0001), deck drains shall be installed in the following, approximate, deck locations:

- Pilothouse Deck, at Frame #21, port and starboard
- Pilothouse Deck at Frame #29, port and starboard
- Upper Deck, at Frame #10, port and starboard
- Upper Deck, at Frame #20, port and starboard
- Upper Deck, at Frame #28, port and starboard
- Upper Deck, at Frame #31, port and starboard

- Upper Deck, at Frame #42, port and starboard
- Upper Deck, at Frame #57, port and starboard
- Main Deck, between Frame #31 and Frame #32, port and starboard

For the Huntington District towboat (CLIN 0002), the St. Paul District towboat (CLIN 0003), and the Rock Island District towboat (CLIN 0004), deck drains shall be installed in the following, approximate, deck locations:

- Pilothouse Deck, aft, port and starboard
- Electronics\Plenum Deck, aft, port and starboard
- Texas Deck, forward, port and starboard
- Texas Deck, at Frame #20, port and starboard
- Texas Deck, aft, port and starboard
- Upper Deck, forward, port and starboard
- Upper Deck, at Frame #21, port and starboard
- Upper Deck, at Frame #30, port and starboard
- Upper Deck, at Frame #31, port and starboard
- Upper Deck, at Frame #45, port and starboard
- Upper Deck, aft, port and starboard
- Main Deck, between Frame #31 and Frame #32, port and starboard

The drain lines from the scuppers shall run from deck level down inside the deckhouse where possible to prevent freezing in the winter. The drain lines shall be routed beneath the main deck and exit the hull side at a distance 8 to 12 inches above the waterline.

The drain lines shall be 1-1/2 inch nominal pipe. All deck drains shall be supplied with removable bronze strainer plates similar to BFG model #DK-5015. All overboard discharges for the drains shall be sloped a minimum of ¼ inch per foot. Clean out plugs shall be installed at the locations of the overboard lines.

The drain headers may be combined with other drain headers and run overboard, but the headers shall not be combined with the bilge, HVAC, or sanitary and sewage systems.

C670 VENTS, SOUNDS AND FILLS

A. GENERAL BACKGROUND

Vents and sounds are required for the various piping systems of the contract. The specific requirements for each system are listed in the respective clause for that system.

Other compartments requiring vents and sounds are listed below with their requirements

B. VOIDS

A minimum 1-1/2 inch vent and a 1-1/2 inch sounding tube shall be installed for the following voids:

- Fuel Oil Tank Innerbottom
- Port Cooler Void
- Starboard Cooler Void
- Aft, Port Void #1
- Aft, Starboard Void #1
- Aft, Port Void #2
- Aft, Starboard Void #2

Each vent shall terminate by way of a return bend. Vent construction shall be in accordance with all applicable ABS rules.

Each sounding tube shall be run as straight as practicable and located at the lowest part of each tank. Each sounding tube shall be flush mount type, with tee wrench. Below the sounding tube, at the tank bottom, there shall be a 6 inch x 6-inch striking plate of at least 3/16-inch thickness, seal welded to the tank bottom.

C675 FIRE MAIN

A. CONTRACT DRAWINGS

CLIN 0001
557-B205-01, OUTBOARD PROFILE
557-B215-01, GENERAL ARRANGEMENT
557-B233-01, PILOTHOUSE DETAILS
557-B245-01, HOLD & MACHINERY ARRANGEMENT

CLIN 0002, CLIN 0003 & CLIN 0004
556-B205-01, OUTBOARD PROFILE
556-B215-01, GENERAL ARRANGEMENT
556-B233-01, PILOTHOUSE DETAILS
556-B245-01, HOLD & MACHINERY ARRANGEMENT

B. DESCRIPTION OF WORK

Each vessel shall be outfitted with a fire main system for fighting onboard vessel fires. The Contractor shall prepare calculations to finalize the selection of the equipment, design the systems, and install all equipment.

C. FIRE MAIN

1. General Requirements

The Contractor shall provide and install all components, piping, and valves necessary to form a complete fire main for each vessel. The fire main shall be arranged through valves to take suction from the sea chests and discharge to the fire stations located throughout each vessel.

2. System Design

The fire main system shall be designed to account for the following:

- The fire pump shall be sized to deliver water simultaneously from the two highest hydrants at a pitot tube pressure of at least 50 psi and a flow rate of at least 80 gpm.
- Set up as a dry system and will only be under pressure during use.

The Contractor shall perform calculations to determine the size of the fire pump and the size of the system's distribution piping. The calculations along with cutsheets of the equipment selected shall be submitted for review and acceptance by the COR prior to the purchase of any equipment by the Contractor.

3. Hydrants

For all the vessels, fire hydrant stations shall be supplied in the approximate locations on the vessel as follows:

- Lower engine room - aft
- Main deck level at Frame #17, port and starboard
- Main deck level at Frame #50, port and starboard
- Upper deck level at Frame #24, port and starboard
- Pilothouse deck level – aft bulkhead

For CLIN 0002, CLIN 0003, and CLIN 0004, additional fire stations shall be supplied in the approximate locations on the vessels as follows:

- Texas deck level at Frame #20, port and starboard
- Plenum deck level – aft bulkhead

The actual position and location of the fire stations shall be determined during the Engineering Phase.

A brass angle valve shall be installed at the outlet of each fire hydrant. The outlet of each hydrant shall be in the horizontal position.

4. Fire Pump

The Contractor shall supply and install a fire pump similar to an Ingersoll-Dresser, type D-800. The pump shall be a self-priming, centrifugal pump with bronze impeller. The pump shall be electric drive type, with the pump and motor furnished as a matched set from the pump manufacturer. The motor controller for the pump shall be set-up with low voltage release. See contract Clause C750.

A relief valve shall be provided and installed on the discharge of the fire pump that relieves back to the pump suction. A pressure gauge shall be fitted on the discharge side of the fire pump.

Each fire pump shall be capable of starting from:

- Locally by the fire pump
- The pilothouse console
- The engineer's workshop
- Each fire hydrant station

At each starter location, pump running lights shall be installed to indicate that the fire pump is running.

5. Fire Hoses, Nozzles & Racks

Each fire station shall be equipped with a single length of 75 feet of fire hose that is in accordance with the standards set forth by the USCG in 46 CFR, subchapter H, subpart 76.10(n). The hoses supplied shall be 1-1/2 inch.

Each fire hose shall be equipped with an USCG approved brass nozzle. The nozzles shall be a combination type, capable of producing either a solid stream or water spray.

Hose racks for stowing the 1-1/2 inch hoses shall be installed at each hydrant. The racks shall provide provisions for easy payout of the fire hose. A spanner wrench shall also be provided at each hydrant.

6. Gray Water Holding Tank & Sewage Holding Tank Flushing

The Contractor shall provide and install 1 inch flushing line connections from the fire main to both the sewage holding tank and the gray water holding tank to allow for the flushing of the tanks during stripping operations. See contract Clause C667.

A pressure gauge and a globe valve shall be installed in each flushing line prior to connecting to each tank.

A warning sign shall be posted adjacent to each globe valve used for flushing. The warning sign shall read "AVOID OVER-PRESSURIZING OF THE TANK. OPEN VALVE SLOWLY."

C677 FIXED FIRE EXTINGUISHING SYSTEM

A. SYSTEM REQUIREMENTS

The Contractor shall provide and install two separate fixed carbon dioxide (CO2) fire extinguishing systems. Each system shall be designed and installed in accordance with the standards set forth by the USCG in 46 CFR, subchapter H, subpart 76.15 – Carbon Dioxide Extinguishing Systems, Details.

One system shall be set up to protect the main engine room. Remote pull stations for this system shall be provided on the main deck at Frame #36, on the port and starboard sides.

The second system shall be set up to protect the generator room. A remote pull station for this system shall be provided on the main deck at Frame #43 on the port side.

B. LOCATION OF CYLINDERS

The CO2 cylinders shall be located in the steering gear room. The cylinders are to be mounted in racks which shall be attached to the deck or bulkhead.

Provisions shall be made for the removal and installation of the cylinders. Weighing bars shall be installed for each rack to allow for the weighing of the cylinders.

C. ALARMS & SHUTDOWNS

Audible alarms shall be provided in the spaces protected that will automatically sound prior to discharge of CO2 into the respective spaces.

A discharge delay of 20 seconds shall be provided in order to allow personnel in these spaces time to evacuate and allow the ventilation system time to wind down. The discharge delay shall not depend on any source of power other than the CO2.

Provisions shall be made for the automatic shutdown of the supply and exhaust ventilation fans for the engine room and the generator room. See contract Clause C685.

D. INSTRUCTIONS & WARNINGS

Instructions and warnings shall be posted in accordance with USCG requirements. As a minimum, the following shall be posted:

- At each pull station, clear instructions relating to the operation of the system.
- Warnings of protection at the entrance to each space protected.
- At the entrance to the steering gear rooms, warning that CO2 is stored in the space.

C678 FIRE DETECTION AND ALARM SYSTEM

The Contractor shall provide and install all components, necessary to form a complete electrical fire detection and alarm system. The electrical fire detection and alarm system provided shall meet all applicable USCG, ABS, and NFPA Rules, with all equipment being UL listed. The system shall be installed throughout the main deckhouse as well as in the engineering and machinery spaces, and the forward stores.

The primary power source for the fire detection system shall be the AC electrical system. The secondary power source shall be from a built-in back-up power supply system consisting of two 24-volt DC batteries with battery charger that will provide a minimum of 84 hours of system operation if the AC electrical service is interrupted. Switchover from the primary source to the secondary source shall be automatic.

The detection system shall be designed to give visual alarm signals and sound audible alarms to be heard throughout the vessel when a fire has been detected. If a fire has been detected in any space on the vessel, the fire detection system is integrated with the HVAC system to shutdown the HVAC system as well as any ventilation fans or heaters serving the spaces except the fans serving the upper and lower engine room, and the generator room.

The system shall include electric smoke detectors and heat sensors wired to a detection cabinet. The specific detector or sensor used in a space shall be based on the system manufacturer's recommendations for that space.

The main detection cabinet and an alarm panel shall be located in the pilothouse. Remote annunciator units and alarm panels shall be located in the engineer's control room and on the exterior bulkhead at the front end of main deckhouse. The alarm panels shall include indicator lights for each compartment protected. The panels shall include silencing buttons that allow for the audible alarms to be silenced at any panel.

A red indicating light shall be installed on the pilothouse top in order to give a visual signal of the activation of the fire detection system.

C679 FIRE SAFETY EQUIPMENT

A. PORTABLE FIRE EXTINGUISHERS

The Contractor shall supply and install portable fire extinguishers as defined below for the Pittsburgh District towboat (CLIN 0001):

Space	Classification	Number
Pilothouse	B-II or C-II	1
Upper Deck Passageway	A-II or B-II	1
Crew's Lounge	A-II or B-II	1
Deck Storage	A-II or B-II	1
Galley/Mess	B-II or C-II	1
Main Deck Passageway	A-II or B-II	1
Upper Engine Room	B-II	2
Engineer's Work Area	A-II or B-II	1
Generator Room	B-II	1
Steering Gear Room	B-II	1
Forward Stores	A-II	1
Forward Machinery Space	B-II	1
Lower Engine Room	B-II	2
Shaft Alley	C-II	1

The Contractor shall supply and install portable fire extinguishers as defined below for the Huntington District towboat (CLIN 0002), the St. Paul District towboat (CLIN 0003) and the Rock Island District towboat (CLIN 0004):

Space	Classification	Number
Pilothouse	B-II or C-II	1
Plenum\Electronics	C-II	1
Texas Deck Passageway	A-II or B-II	1
Crew's Lounge	A-II or B-II	1
Upper Deck Passageway	A-II or B-II	1
Deck Storage	A-II or B-II	1
Galley/Mess	B-II or C-II	1
Main Deck Passageway	A-II or B-II	1
Upper Engine Room	B-II	2
Generator Room	B-II	1
Workshop	A-II or B-II	2
Steering Gear Room	B-II	1
Forward Stores	A-II	1
Forward Machinery Space	B-II	1
Lower Engine Room	B-II	2
Shaft Alley	C-II	1

The classification of the extinguishers to be supplied and their mounting locations shall be in accordance with the ABS and USCG Rules.

All extinguishers shall be supplied with racks or holders for mounting.

B. FIRE AXES

Two fire axes shall be provided and installed on the vessel. The axes shall be mounted at the main deck level on the exterior deckhouse bulkhead, approximately at Frame #15, port and starboard.

C. FIRE CONTROL PLAN

The Contractor shall produce a Fire Control Plan in accordance with the ABS River Rules (Part 4, Section 7, paragraph 7.25.10).

The Fire Control Plan shall be submitted for review and approval by the COR during the construction phase. After approval, an engraved metal copy shall be produced and mounted in the galley\mess area. The engraved metal copy shall be in accordance with Clause C460 of the contract.

C685 HEATING, VENTILATION AND AIR CONDITIONING

A. CONTRACT DRAWINGS

CLIN 0001
557-B215-01, GENERAL ARRANGEMENT
557-B233-01, PILOTHOUSE DETAILS
557-B245-01, HOLD & MACHINERY ARRANGEMENT

CLIN 0002, CLIN 0003 & CLIN 0004
556-B215-01, GENERAL ARRANGEMENT
556-B233-01, PILOTHOUSE DETAILS
556-B245-01, HOLD & MACHINERY ARRANGEMENT

B. DESCRIPTION OF WORK

Each vessel shall be outfitted with heating, air conditioning, and ventilation throughout the various spaces shown on the above drawings. The Contractor shall prepare calculations to finalize the selection of the equipment, design the systems, and install all equipment.

C. CONDITIONED SPACES

The entire deckhouse forward of Frame #31 shall be air conditioned, heated and receive outside ventilation air. The engineer's workshop, aft between Frame #44 and Frame #50 on the starboard side, shall also be air conditioned, heated and receive outside ventilation air.

1. Load Calculations

The Contractor shall perform heating and cooling load calculations in order to size the air conditioning, heating and ventilation system for the above spaces. The heating and cooling load calculations along with cutsheets of the equipment selected shall be submitted for review and acceptance by the COR prior to the purchase of any equipment by the Contractor.

The heating and cooling loads shall be based on criteria from the SNAME Technical and Research Bulletin Nos. 4-7 and 4-16 and from the ASHRAE Cooling & Heating Load Calculation Manual (GRP 158). Temperature criteria to be used for each vessel is listed below:

For CLIN 0001 (Pittsburgh, PA)

- Outside air (cooling): 89 degrees F DB, 72 degrees F WB
- Indoor air (cooling): 75 degrees F DB @ 50% RH
- Indoor air (heating) 75 degrees F
- Outside air (heating) 0 degrees F

For CLIN 0002 (Huntington, WVA)

- Outside air (cooling): 91 degrees F DB, 74 degrees F WB
- Indoor air (cooling): 75 degrees F DB @ 50% RH
- Indoor air (heating) 70 degrees F
- Outside air (heating) 10 degrees F

For CLIN 0003 (St. Paul, MN)

- Outside air (cooling): 89 degrees F DB, 73 degrees F WB
- Indoor air (cooling): 75 degrees F DB @ 50% RH
- Indoor air (heating) 70 degrees F
- Outside air (heating) -12 degrees F

For CLIN 0004 (Moline, IL)

- Outside air (cooling): 91 degrees F DB, 75 degrees F WB
- Indoor air (cooling): 75 degrees F DB @ 50% RH
- Indoor air (heating) 70 degrees F
- Outside air (heating) -4 degrees F

Outside ventilation air shall be supplied to each conditioned space on the basis of 15 cfm/person. For determining the necessary amount of ventilation air to be supplied, it may be assumed that the:

- Pilothouse has two people
- Staterooms have either one or two people as marked
- Crew's Lounge has four people
- Ship's Office has two people
- Mess Area has eight people
- Galley has two people
- Deck Storage area has two people
- Laundry area has one person
- Engineer's workshop has two people

The load calculations must also account for the electrical and electronics equipment in the electronics room located on the plenum deck for CLIN 0002, CLIN 0003, and CLIN 0004.

2. System\Equipment Selection

Based on the above load calculations, equipment shall be selected for a ductless split air conditioning similar to the AmericaSeries manufactured by Enviromaster International (EMI). The system supplied shall have the following features:

- Heat pump system with supplemental electric heat.
- Ability to add outside fresh air.
- Each space shall be fitted with its own air handler/evaporator unit with thermostatic control mounted on the unit.
- Multi-zone, allowing for up to four separate evaporators to be connected to a single condensing unit.
- Each evaporator circuit includes an independent compressor, valves, lines, etc with the cabinet and fan only common to each evaporator served by a respective condensing unit.

Based on the heating and cooling calculations performed above the Contractor shall size the appropriate air handlers/evaporators for each space and match the air handlers to the appropriate serving condenser.

The selection of a mounting type (floor, ceiling, or wall) for an air handler/evaporator unit shall be based on minimizing the unit's obtrusiveness in the space it is serving.

Each condensate line from an air handler/evaporator shall be insulated. The condensate line from each air handler/evaporator shall drain together into a common header with the common headers discharging overboard. The condensate drains from the air handlers/evaporators shall not be combined with any other systems' overboard discharge lines.

3. Fire Detection System Interconnection

Each air handler shall be provided with controls linked to the fire detection and alarm system. All of the air handlers shall shutdown with the activation of the fire detection and alarm system. See contract Clause C678.

D. VENTILATION

1. Upper & Lower Engine Room

The Contractor shall provide and install a mechanical supply and exhaust ventilation system for the upper and lower engine room.

a. Ventilation Calculations

The ventilation system shall be designed to:

- provide a minimum of two air changes per minute to the upper and lower engine room or maintain the space temperature at 120 degrees F or below. The larger criteria should be used. It shall be assumed that the outside temperature is 95 degrees F.

- provide positive pressure to the entire space (upper and lower engine room) at all times.

- account for carrying away the radiated heat of both main engines operating at the engines' maximum rating at the same time.

- supply and carry away the proper amount of air for all other equipment operating in the upper and lower engine room.

The Contractor shall perform calculations to determine the sizes of the supply inlets and exhaust outlets required and the size of the supply and exhaust fans required. The calculations along with cutsheets of the equipment selected shall be submitted for review and acceptance by the COR prior to the purchase of any equipment by the Contractor.

b. Supply Fans

Each supply fan shall be installed in an intake plenum, with one plenum located on the port side and the second plenum located on the starboard side. The plenums shall be located between Frame #42 and Frame #44. Each plenum shall be provided with a removable access plate in the upper room to allow for access from inside the upper engine room to the fans for maintenance purposes.

Each plenum opening in the bulkhead shall be fitted with an automatic, balanced type louver with blade seal and stainless steel insect screen. The plenums shall terminate as low as possible in the lower engine room.

The supply fans provided shall be marine duct axial blowers, similar to Hartzell, series 44 with TEFC, 480 volt AC, three phase motors. The motors and controls shall be two speed. The motor controller for each fan shall be set-up with low voltage release. See contract Clause C750.

c. Exhaust Fans

An exhaust fan shall be provided and mounted, with gaskets, in the aft end of each engine room stack. Each exhaust fan outlet is to be fitted with an automatic balanced type louver with blade seal, and stainless steel insect screen.

The exhaust fans provided shall be marine type duct axial blowers or propeller fans, similar to Hartzell, with TEFC, 480 volt AC, three phase motors. The motors and controls shall be two speed. The motor controller for each fan shall be set-up with low voltage release. See contract Clause C750.

d. Fire Suppression System Interconnection

Provisions shall be made for the automatic shutdown of the supply and exhaust ventilation fans and the automatic closure of the louvers of the supply and exhaust ventilation fans for the engine room upon activation of the fixed fire suppression system. See contract Clause C677.

The Contractor shall provide and install emergency stop buttons for the supply and exhaust fans exterior of the upper and lower engine room. The stop buttons shall be mounted in a watertight enclosure at Frame #38 on the port side.

2. Generator Room

The Contractor shall provide and install a mechanical supply and exhaust ventilation system for the generator room.

a. Ventilation Calculations

The ventilation system shall be designed to:

- provide a minimum of two air changes per minute to the generator room or maintain the space temperature at 120 degrees F or below. The larger criteria should be used. It shall be assumed that the outside temperature is 95 degrees F.

- provide positive pressure to the entire space (generator room) at all times.

- account for carrying away the radiated heat of both generator sets operating at same time at full load.

- supply and carry away the proper amount of air for all other equipment operating in the generator room.

The Contractor shall perform calculations to determine the size of the supply inlet and exhaust outlet required and the size of the supply fan and exhaust fan required. The calculations along with cutsheets of the equipment selected shall be submitted for review and acceptance by the COR prior to the purchase of any equipment by the Contractor.

b. Supply Fan

The supply fan shall be installed on the upper deck with watertight cowling, between Frame #44 and Frame #46 (the forward, port corner of the generator room). The fan shall be connected to a plenum that terminates the generator room.

The intake on the supply fan shall be fitted with an automatic, balanced type louver with blade seal and stainless steel insect screen. The intake louver shall close automatically upon activation of the fixed fire suppression system.

The supply fan provided shall be a marine duct axial blower, similar to a Hartzell, series 44, with TEFC, 480 volt AC,

three phase motor. The motor and controls shall be two speed. The motor controller for the fan shall be set-up with low voltage release. See contract Clause C750.

c. Exhaust Fan

An exhaust fan shall be provided and mounted, with gasket, in the aft end of the generator room stack. The exhaust fan outlet is to be fitted with an automatic balanced type louver with blade seal, and stainless steel insect screen.

The exhaust fan provided shall be a marine type duct axial blower or propeller fan, similar to a Hartzell, with TEFC, 480 volt AC, three phase motor. The motor and controls shall be two speed. The motor controller for the fan shall be set-up with low voltage release. See contract Clause C750.

d. Fire Suppression System Interconnection

Provisions shall be made for the automatic shutdown of the supply and exhaust ventilation fans and the automatic closure of the louvers of the supply and exhaust ventilation fans for the generator room upon activation of the fixed fire suppression system. See contract Clause C677.

The Contractor shall provide and install emergency stop buttons for the supply and exhaust fans exterior of the generator room. The stop buttons shall be mounted in a watertight enclosure at Frame #38.

3. Steering Gear Room

The Contractor shall provide and install a natural supply inlet and a mechanical exhaust outlet fan for the steering gear room.

a. Ventilation Calculations

The ventilation system shall be designed to:

- provide a minimum of one air change per five minutes.
- supply air for the air compressors.

The Contractor shall perform calculations to determine the size of the supply inlet and mechanical exhaust outlet fan required

for the steering gear room. The calculations along with cutsheets of the equipment selected shall be submitted for review and acceptance by the COR prior to the purchase of any equipment by the Contractor.

b. Supply Inlet

A motor operated intake louver shall be installed on the starboard bulkhead. The intake louver shall be gasketed and provided with a stainless steel insect screen.

The louver shall automatically open upon start-up of the exhaust fan.

c. Exhaust Fan

An exhaust fan shall be provided and mounted, with gasket, on the port side bulkhead. It shall be provided with a bug screen and automatic balanced type louvers.

d. Fire Detection System Interconnection

Provisions shall be made for the automatic shutdown of the exhaust ventilation fan and the automatic closure of the supply inlet louver for the steering gear room upon activation of the fire detection system. See contract Clause C678.

The Contractor shall provide and install an emergency stop button for the exhaust fan in a watertight enclosure at Frame #38 on the main deck level.

4. Machinery Space

The Contractor shall provide and install a natural supply inlet and a mechanical exhaust outlet fan for the machinery space.

a. Ventilation Calculations

The ventilation system shall be designed to:

- provide a minimum of one air change per six minutes.
- supply and carry away the proper amount of air for all equipment operating in the machinery space.

The Contractor shall perform calculations to determine the size of the supply inlet and mechanical exhaust outlet fan required for the machinery space. The calculations along with cutsheets of the equipment selected shall be submitted for review and acceptance by the COR prior to the purchase of any equipment by the Contractor.

b. Supply Inlet

A supply plenum shall be built from the machinery space to the main deck level on the starboard side. The plenum shall be watertight with a motor operated intake louver. The intake louver shall be gasketed and provided with a stainless steel insect screen.

The louver shall automatically open upon start-up of the exhaust fan.

c. Exhaust Outlet

An exhaust plenum shall be built from the machinery space to the main deck level on the port side. The plenum shall be watertight, gasketed, and provided with a stainless steel insect screen.

An exhaust fan shall be provided and mounted, with gasket, on the port side machinery space bulkhead. The fan shall be installed with a fan guard.

d. Fire Detection System Interconnection

Provisions shall be made for the automatic shutdown of the exhaust ventilation fan and the automatic closure of the supply inlet louver for the machinery space upon activation of the fire detection system. See contract Clause C678.

The Contractor shall provide and install an emergency stop button for the machinery space exhaust fan in a watertight enclosure at Frame #38 on the main deck level.

5. Engineer's Workshop & Deck Storage Area

The Contractor shall provide and install exhaust fans for the engineer's workshop (between Frame #44 and Frame #50, aft, starboard side) and the deck storage area, forward.

Each space shall be outfitted with a two speed, shutter-mounted exhaust fan similar to a Grainger's stock #2C713. Each fan shall have a 16 inch diameter propeller and shall be provided with wire guards that meet OSHA regulations.

Provisions shall be made for the automatic shutdown of the exhaust fans upon activation of the fire detection system. See contract Clause C678.

6. Toilet\Head Space Fans

The Contractor shall provide and install exhaust fans and fan/lights for the head and toilet spaces.

Each stateroom head shall be outfitted with a commercial duty combination exhaust fan/light similar to a Broan model HD80L. The fan shall be capable of exhausting a minimum of 80 cfm of air from the head space to the outside of the deckhouse. Each exhaust fan shall be supplied from the 120 volt AC system and be on a GFCI-protected branch circuit.

Provisions shall be made for the automatic shutdown of the exhaust fans in the stateroom heads, the crew's lounge head, and the public head upon activation of the fire detection system. See contract Clause C678.

7. Forward Stores & Shaft Alley

The forward stores and shaft alley shall be provided with vents in accordance with the ABS Rules.

The vents shall run to a minimum height of 18 inches above the main deck, and terminate with a gooseneck fitting. A corrosion-resistant screen shall be installed at the vent terminals.

E. HEATING

The Contractor shall provide and install the following electric heaters

LOCATION	HEATER TYPE	QUANTITY	VOLTAGE
Hold Level:			
Forward Stores	3 kW	2	480, 3∅
Forward Machinery Space	3 kW	1	480, 3∅
Lower Engine Room	5 kW	2	480, 3∅
Shaft Alley	5 kW	1	480, 3∅
Main Deck Level:			
Passageway (Frame #25)	1.5 kW	1	120, 1∅
Upper Machinery Space	3 kW	2	480, 3∅
Generator Room	5 kW	1	480, 3∅
Engineer's Workshop	1.5 kW	1	120, 1∅
Steering Gear Room	5 kW	2	480, 3∅
Upper Deck Level:			
Passageway (Frame #26)	1.5 kW	1	120, 1∅
Crew's Lounge	1.5 kW	1	120, 1∅
Pilothouse	1.5 kW	2	120, 1∅

The heaters supplied and installed shall be similar to those available from Grainger. The 1.5 kW heaters are stock #3UG12, the 3 kW heaters are stock #4E299, and the 5 kW heaters are stock #2E582.

The actual position and location of the heaters in the spaces served shall be determined during the Construction Phase.

Provisions shall be made for the automatic shutdown of the heaters through out the vessel upon activation of the fire detection system. See contract Clause C678.

C690 COMPRESSED AIR SYSTEM

A. CONTRACT DRAWING

CLIN 0001
557-B245-01, HOLD & MACHINERY ARRANGEMENT

CLIN 0002, CLIN 0003 & CLIN 0004
556-B245-01, HOLD & MACHINERY ARRANGEMENT

B. DESCRIPTION OF WORK

For each vessel, the Contractor shall provide and install all equipment, components, and piping required for two complete, separate compressed air systems. One system shall be a self-contained system serving the air horn. The second system, ship's service, shall provide:

- Starting air for the main engines. See Clause C605.
- Starting air for one of the diesel generator set engines. See Clause C733.
- Control air for the shaft brakes. See Clause C605.
- Service air for the sewage treatment plant. See Clause C667.
- Service air for the air tool stations.
- Blowdown air for the sea chests. See Clause C325.

The Contractor shall submit calculations performed to determine the size of the ship's service system components (air receivers, air compressors, etc). The calculations along with 'cutsheetsof the equipment selected shall be submitted for review by the COR prior to the purchase of any equipment by the Contractor.

C. AIR COMPRESSORS

For the starting air\ship's service compressed air system, two, 2-stage air compressors shall be provided and installed. The compressors provided shall be set up to run at 1755 rpm and provide air at 250 psi. The compressors shall be air cooled and each compressor shall be provided with an hour meter.

The compressors shall be mounted in the steering gear room with each compressor mounted on vibration isolators with a design transmissibility of 20% or less.

The system shall be set up to maintain 225-psi air in the air receivers. Pressure switches shall be provided to cut-in both air compressors when the system pressure drops to 150 psi and cutout when the system pressure of 225 psi is reached.

D. PIPING & EQUIPMENT

Piping for both compressed air systems shall be seamless black iron, ASTM A106.

A separator/filter with automatic drain shall be provide immediately downstream of the compressors. The drain shall be piped to a drain pan.

Reducing stations shall be supplied and installed to reduce the system air from 225 psi to the pressures required for the air starters, control air for the shaft brakes, and for the air tool stations. The air tool stations are to be supplied with 100-psig air.

Filters and air dryers shall be installed to condition the control air for the shaft brakes. Types and sizes of filters shall be in accordance with the shaft brake\gear manufacturer's recommendations. See contract Clause C605 for shaft brake requirements.

E. AIR TOOL STATIONS

Air tool stations shall be provided and installed in the following locations:

- Forward Machinery Space
- Lower Engine Room, fore and aft
- Shaft Alley
- Upper Engine Room, fore and aft
- Generator Room
- Steering Gear Room
- Engineer's Workshop
- Deck Storage Area
- Forward main deck, exterior

Each air tool station shall be equipped with a filter/regulator/lubricator unit rated to operate between 0-125 psig.

F. SEA CHEST BLOWDOWN

A 1 inch line with valves shall be installed from the starting air\ship's service compressed air system to each sea chest. These lines shall be used to blowdown each respective sea chest.

G. AIR RECEIVERS

Two horizontal air receivers, minimum 200-gallon capacity each, rated at not less than 350 psig, shall be provided and installed. A third receiver, as sized by the horn manufacturer shall be supplied for the self-contained air horn system.

All three receivers shall be:

- Constructed and certified in accordance with the ASME Code for Unfired Pressure Vessels. Each receiver shall be stamped and an ASME Certifiicate of Inspection shall be furnished with the receiver.

- The design, fabrication, and testing of the air receivers shall be in accordance with the ABS Rules (which also requires survey at the plant of manufacture for fabrication and testing).

- Supplied with an automatic condensate drain valve to allow for the removal of accumulated oil and water. The valve shall empty into a drain pan located beneath each receiver.

- Provided with a pressure gauge and relief valve.

H. AIR HORN SYSTEM

The Contractor shall supply and install an air compressor and tank unit dedicated to serve the air horn. The compressor and receiver supplied shall be similar to those available from Kahlenberg Brothers. The receiver shall meet the requirements outlined above.

For CLIN 0002, CLIN 0003, and CLIN 0004, the compressor and receiver shall be installed on the plenum deck in the electronics room. The air horn compressor shall be supplied power from the 208Y/120 volt AC system. The requirements for the air horn shall be in accordance with contract Clause C472.

For CLIN 0001, the compressor and receiver shall be installed in the deck storage area.

C692 ALARM SYSTEMS

A. REFERENCE DRAWINGS

#518-D692-01 GENERAL ALARM SYSTEM
#518-D692-02 BILGE ALARM SYSTEM SCHEMATIC

B. GENERAL ALARM SYSTEM

For each vessel, a General Alarm System shall be provided and installed in accordance with USCG regulations. Reference drawing #518-D692-01 is provided for general guidance for designing and installing the system.

Bells shall be installed throughout the vessels as general emergency alarm signals. The tone of the bells shall be different from that of the Fire Detection System. See Clause C678. In addition to the bells, red flashing lights or red rotating beacons shall be installed in areas with high background noise. Lights and bells, shall be installed in the vessels as follows:

For CLIN 0001:

- Upper Deck – bell in the passageway
- Upper Deck Exterior – aft end of house at Frame #29
- Main Deck (deckhouse interior, forward of Frame #39) bell and light in the galley mess area, and bell in the crew's lounge
- Upper Engine Room – bell and light centrally located
- Engineer's Workshop – bell
- Generator Room – bell and light
- Steering Gear Room – bell and light
- Hold Level – bell and light in the Forward Machinery Space, Lower Engine Room, and the Shaft Alley
- Main Deck Exterior – forward bulkhead of the main deckhouse (Frame #13), and Frame #36, port and starboard.

For CLIN 0002, CLIN 0003 and CLIN 0004:

- Plenum Deck (Electronics Room) - bell
- Texas Deck – bell in the passageway
- Upper Deck – bell in the passageway and the Crew's Lounge
- Upper Deck Exterior – aft end of house at Frame #29
- Main Deck (deckhouse interior, forward of Frame #36) bell and light in the galley mess area, and bell in the passageway at Frame #25
- Upper Engine Room – bell and light centrally located
- Engineer's Workshop – bell

- Generator Room – bell and light
- Steering Gear Room – bell and light
- Hold Level – bell and light in the Forward Machinery Space, Lower Engine Room, and the Shaft Alley
- Main Deck Exterior – forward bulkhead of the main deckhouse (Frame #13), and Frame #36, port and starboard.

A 12-volt DC battery and battery charger shall be provided and installed for each system. For details of the battery and battery charger, see contract Clause C706. The General Alarm panel provided shall be similar to those manufactured by J-Box, Marrero, LA (www.jboxinc.com) and comply with USCG, 46 CFR, subpart 113.25.

The General Alarm bells and lights shall be marked in accordance with contract Clause C461.

C. BILGE ALARM SYSTEM

The Contractor shall provide and install a Bilge Alarm System for each vessel. Reference drawing #518-D692-02 is provided for general guidance for designing and installing the system.

The system shall be powered directly from the 12 volt DC system.

Bilge level sensors or switches shall be installed in the following voids or compartments below the main deck level:

- Forward Stores
- Fuel Oil Tank Innerbottom
- Forward Machinery Space
- Lower Engine Room
- Port Cooler Void
- Starboard Cooler Void
- Shaft Alley
- Aft, Port Void #1
- Aft, Starboard Void #1
- Aft, Port Void #2
- Aft, Starboard Void #2

The Contractor shall provide and install a monitoring panel with audible and visual alarms in the pilothouse and in the engineer's control room. The monitoring panel in the pilothouse shall be provided with a dimmer switch. The monitoring panels in the pilothouse and the engineer's control room shall be provided with silencing buttons for the audible alarms in the panels.

A yellow indicating light shall be installed on each pilothouse top in order to give a visual signal of the activation of the bilge alarm system.

D. WATERTIGHT DOOR ALARM

For each vessel, the Contractor shall provide and install a watertight door alarm to indicate that the watertight doors in the hold are open. An alarm panel with audible and visual alarms shall be installed in the pilothouse and in the engineer's control room. The panel in the pilothouse shall be provided with a dimmer switch. The panels in the pilothouse and the engineer's workshop shall be provided with silencing buttons for the audible alarms in the panels.

C700 ELECTRICAL

C701 GENERAL REQUIREMENTS FOR ELECTRICAL SYSTEMS

An electrical power system shall be provided and installed to provide power for each of the vessel's electrical equipment. The system consists of an AC section and a DC section.

The design, construction and installation of all system components shall be suitable in all respects for marine service and the intended application. All system components shall be furnished new and unused.

The design ambient temperature for all electrical equipment in machinery spaces shall be 50 degrees C and all current carrying conductors shall be copper. The design ambient temperature for motors is defined in contract Clause C750.

Equipment shall be located and oriented as conveniently as practicable for operation and maintenance. All equipment shall be accessible for removal, servicing and adjustment without dismounting or removal of other equipment.

Unless otherwise specified, all machinery, equipment, materials and installation shall be in accordance with all applicable rules, regulations and recommendations contained in the current issue of the publications listed in Clause C003, including any revisions that have been published in the Federal Register prior to the date of this contract.

All the equipment furnished shall bear the approval of the Underwriters Laboratories, where applicable. Contract references to specific sections of codes, rules and standards in these specifications are intended to emphasize specific salient items. All equipment and design shall be furnished in compliance with all applicable sections of the codes, rules, and standards cited in Clause C003 and Clause C004.

C702 ELECTRICAL EQUIPMENT & CABLING MARKING

A. DESIGNATION SYSTEM

All designation of circuits, panelboards, nameplates, etc shall be in accordance with Annex B of IEEE Standard 45 – 1998 edition.

B. EQUIPMENT MARKING REQUIREMENTS

All electrical equipment shall be provided with standard label plates indicating manufacturer, model number, and electrical characteristics (operating voltage, phase, amperage, etc.). The nameplates, serial number plates, identification tags, etc. that are installed on the equipment shall remain in place on the equipment as furnished by suppliers. The Contractor shall use caution during construction to not damage or paint over nameplates or tags. Damaged nameplates or tags shall be replaced prior to Final Acceptance.

The Contractor shall install identification labels for all equipment. All nameplates and notices shall be stamped or engraved on brass or plastic plates. All weather exposed nameplates, notices, and markings shall be of brass.

All distribution panels shall be labeled with designation plates. All breakers in the distribution panels shall be numbered and the panel identification cards filled out to identify the breaker's service. See USCG, 46 CFR, subchapter J, paragraph 111.40-11.

All other controls, gauges, switches, etc., shall be labeled with phenolic label plates to permit operation of the vessel. This includes pilothouse equipment as well.

C. CABLE MARKING

All interconnecting cables and wiring shall be marked at each termination and at each watertight bulkhead or deck with circuit or system identification. Power distribution wiring shall be marked to indicate phase and polarity. All cables shall be suitably identified throughout their length with cable tags identifying the circuit designation.

The tags are to be fabricated from strip aluminum or bronze with raised lettering and shall be securely fastened to the cable by banding.

Cable identification shall be in accordance with the electrical cable schedule developed per contract Clause C725.

D. IDENTIFICATION OF MOTOR CONTROLLERS

Each motor controller and motor control center shall be marked in accordance with USCG, 46 CFR, subchapter J, paragraph 111.70-3(d).

E. SHORE POWER & OFF-VESSEL IDENTIFICATION

The Contractor shall install an identification plate for the shore power receptacle in accordance with the ABS River Rules (Part 4, Section 4, paragraph 4/4A4.7.5).

An identification plate with similar information shall also be installed for the off-vessel receptacle.

C705 AC ELECTRICAL SYSTEMS

A. PRIMARY POWER SYSTEM

The primary power system supplied for each vessel shall be rated as a 480 volt AC, 3-phase, 3-wire, 60 Hz, ungrounded system. Power to this system shall be supplied by the generator sets or through shore power.

The generator sets for the primary power system are set up for parallel operation.

B. SECONDARY POWER SYSTEM

The secondary power system supplied for each vessel shall be rated as a 208Y/120 volt AC, 3 phase, 4-wire, 60 Hz, grounded system. Power to this system shall be supplied from the main switchboard through a transformer.

C706 DC ELECTRICAL SYSTEMS

A. REFERENCE DRAWING

603-D720-02, ONE LINE DIAGRAM (DC)

B. DESCRIPTION OF WORK

The Contractor shall supply and install a 12 volt DC electrical system for the navigation, communication, steering, emergency lighting loads, and the Bilge Alarm System. A reference drawing has been provided for guidance in designing the 12 volt DC system. The system components shall be sized based on the DC Load Analysis calculated per contract Clause C710 and a One Line Diagram (DC) shall be prepared for the system in accordance with contract Clause C720.

For CLIN 0002, CLIN 0003, and CLIN 0004, the DC system power supply, battery charger, and battery, as well as associated equipment, shall be located in the Electronics Room on the Half Deck. For CLIN 0001, the DC system power supply, battery charger, and battery, as well as associated equipment, shall be located in the Deck Storage area on the main deck level.

For all the towboats, the DC system distribution panel shall be located in the pilothouse.

Equipment supplied that requires 24-volt DC power for operation shall be either:

- Connected to the 12 volt DC system via a 24 volt DC to 12 volt DC converter
- Or installed with its own dedicated power supply

For reference, systems requiring DC power that are not part of the DC systems are the Fire Detection & Alarm System (contract Clause C678), the General Alarm System (contract Clause C692), and the starting battery systems supplied for one of the diesel generator sets and the diesel driven fire pump engine.

C. DC SYSTEM PANELBOARD

A DC distribution panel shall be provided and installed similar to those manufactured by Paneltronics. The DC panel shall include, but not be limited to the following basic components and features:

- Power available light with dimmer switch
- Line voltage meter
- Load current meter

D. BATTERIES & BATTERY CHARGERS

1. Battery Requirements

All batteries provided shall be suitable for marine use and shall be rated for a minimum of 200 ampere-hours.

The Contractor shall provide and install 12 volt DC batteries for the 12 volt DC system and for the General Alarm System. The size of the 12 volt DC system battery shall be based on the Load Analysis performed per contract Clause C710. The General Alarm System battery shall be sized in accordance with contract Clause C692.

For the starting of each vessel's diesel generator sets, the Contractor shall supply and install a 24-volt DC battery bank for each generator set. Charging of the 24 volt DC starting battery banks shall also be accomplished by its respective 24-volt DC engine alternator attached to the generator set diesel engine. See Clause C733.

For CLIN 0002, CLIN 0003, and CLIN 0004, the batteries for the 12 volt DC system and for the General Alarm System shall be located on the Plenum Deck\Electronics Space. For CLIN 0001, the batteries for the 12 volt DC system and for the General Alarm System shall be located in the Deck Storage area on the main deck.

The 24-volt DC starting battery banks shall be installed in the Generator Room.

Each battery or set of batteries shall be placed in vented, high-density polyethylene boxes with lockable, hinged covers.

2. Battery Chargers

For the 12-volt DC system and the General Alarm System, the Contractor shall supply and install a battery charger for each system similar to a La Marche, model A41 series. Each charger supplied shall be USCG listed for marine service and built to carry continuous loads. The battery chargers for the 12 volt DC system and the General Alarm System shall be sized to meet the power requirements for that respective system's batteries. For CLIN 0002, CLIN 0003, and CLIN 0004, the battery chargers shall be mounted on the Plenum Deck in the Electronics Space. For CLIN 0001, the battery chargers shall be located in the Deck Storage area.

For the 24 volt DC starting system, the Contractor shall supply and install a battery charger similar to a La Marche model ESC battery charger for each diesel generator set. The battery chargers for the 24 volt DC starting system shall be sized to meet the power requirements for the generator set diesel engine starting batteries. The battery chargers shall be mounted in the Generator Room and be suitable for operation in 50 degrees C.

The input voltage for all chargers shall be 120 volt AC, 60 Hz and all chargers shall be supplied with ammeters.

3. Overload & Reverse Current Protection

Overload and reverse current protection for the battery conductors shall be in accordance with USCG, 46 CFR, subchapter J, paragraph 111.15-25.

C710 LOAD ANALYSIS

A. AC LOAD ANALYSIS

The Contractor shall develop a complete load analysis for the 480/208Y/120 volt AC electrical system for each vessel based on the actual equipment selected for installation. Each load analysis should be set up for the following modes:

- Towing - Summer
- Towing – Winter
- In-Port/Shore Power - Summer
- In-Port/Shore Power - Winter

B. DC LOAD ANALYSIS

The Contractor shall develop a complete load analysis for the 24 volt DC and 12 volt DC systems for each vessel based on the actual equipment selected for installation. Each load analysis should be set up for the following modes:

- Summer - Day
- Winter - Night
- Emergency Condition

C715 FAULT CURRENT & CIRCUIT BREAKER ANALYSIS

The Contractor shall prepare a complete detailed fault current analysis and circuit breaker coordination study for each vessel.

The fault current analysis shall demonstrate that all protective devices such as fuses and circuit breakers have sufficient short circuit breaking and making capacities. A listing of all protective devices, their locations, use, manufacturer, model, and interrupting rating shall be submitted with the fault current analysis.

The circuit breaker coordination study shall demonstrate that only the circuit breaker closest to the fault will open under short circuit conditions.

Copies of time-current characteristics for all breakers involved in the coordination study shall be submitted with the study.

C720 ONE LINE DIAGRAMS

The Contractor shall develop complete AC and DC one line diagrams for each vessel based on the final equipment selections.

Catalog cutsheets shall be provided for all AC system and DC system components with the submission of the respective system's one line diagram.

C725 CABLING REQUIREMENTS

A. VOLTAGE DROP & CABLE SCHEDULE

The Contractor shall prepare separate cable schedules for all circuits in the AC electrical system and for all circuits in the DC electrical system for each vessel.

A voltage drop calculation shall be included on each cable schedule for each circuit. For each AC circuit, a 5% maximum voltage drop is allowed from the switchboard to the connected load. For each DC circuit analysis, a 5% maximum voltage drop is allowed from the DC power source to the connected load.

The cable schedules and voltage drop analyses shall be submitted to the COR for review prior to the Construction Phase.

B. CABLE REQUIREMENTS

Cables shall be similar to L.F. GAUBERT, Specification #474, TNIB Series, 90°C rated, armored, USCG & ABS approved. Armored cables used shall be basket weave armor (bronze jacket) in accordance with IEEE-45 or equivalent (as classified by UL as IEEE-45 equivalent). The armored cable shall be installed grounded at both ends.

The Contractor shall select the size of the cables based on the voltage drop analysis and the current distribution requirements from the one-line diagrams. All cables for receptacle circuits shall be 12 AWG or larger.

All wiring shall be clipped and bracketed to provide straight, vertical and horizontal runs throughout the vessel. Care shall be taken to run all power cables separate from all control signal cables in order to avoid field interference.

All cable installations shall be supported on galvanized steel brackets, and shall comply with all applicable provisions of IEEE-45 Clause 10. Cable supports shall be heavy enough to bear the weight of cables without bending, and all supports shall have rough or sharp edges removed so that cable armor will not be damaged. Horizontal runs of cable shall be supported by brackets spaced every 2 feet. Vertical runs of cables shall be supported every 2 feet with individual cable straps and bar hangers or brackets.

Soldering shall be performed only with resin or other neutral flux. Ends of all wires not tinned by the cable manufacturer shall be tinned before securing to terminals or before applying lugs. Solderless lugs shall be used wherever practicable. Terminals or lugs that are to be soldered to cable ends shall first be cleaned and tinned or treated with a neutral flux to ensure a good bond.

Connections to equipment and terminal boards shall be made with compression type connectors.

Ring tongue compression terminals shall be used for all control terminations. Ends of all cables shall be sealed against moisture by taping in combination with insulating compounds or other approved methods.

Cable penetrations throughout non-watertight bulkheads and decks shall have ample bearing surfaces. Cable penetrations through watertight decks or bulkheads shall use multi-cable transits similar to the ROX System or brass or steel stuffing tubes. Multi-cable transits shall be installed with spares to allow for the addition of cables. Enclosure penetrations shall use brass stuffing tubes.

All cables shall be identified in accordance with contract Clause C702.

C730 LIGHTING AND RECEPTACLES

A. REFERENCE DRAWING

603-D720-02, ONE LINE DIAGRAM (DC)

B. GENERAL REQUIREMENTS

The Contractor shall provide and install complete lighting systems in order to adequately light each vessel. The lighting systems shall consist of:

- Interior Lighting
- Exterior Lighting
- Emergency Lighting
- Floodlights
- Searchlights
- Flanking Lights
- Navigation Lights
- Instrument Lighting

The Contractor shall provide and install convenience receptacles throughout the vessel interior and exterior.

C. INTERIOR & EXTERIOR LIGHTING

All fixtures shall be marine type and made of corrosion resistant materials and shall be spaced evenly to provide proper distribution of light. Fixture installation shall be such that the low point of all fixtures is above the lowest structural members.

All lighting switches shall be marine type, watertight where required by location, and shall be mounted for convenient operation.

The lighting level (measured in foot-candles), shall be in accordance with the guidelines established in the IES Lighting Handbook for Marine Lighting.

1. Interior Lighting

Interior lighting fixtures shall be fluorescent, ceiling mounted or surface mounted fixtures, controlled by a switch at each entrance to the compartment. Fluorescent type lamps shall be rapid start and cool white.

The pilothouse shall also be equipped with a 12 volt DC, twin tube, 8-watt light with red for night vision underway and white for normal use. The light shall be similar to a Guest model #836C-3-2R fixture.

The Contractor shall provide and install a fluorescent bunk light at the head of each bed in each stateroom.

For each stateroom and\or head space, the Contractor shall install:

- A fluorescent light over each mirror.
- A combination exhaust fan/light. See contract Clause C685.

The fluorescent lights installed over the mirrors and the combination fan/lights shall be on GFCI protected circuits.

2. Exterior Lighting

Two types of exterior deck lighting shall be provided and installed in order to provide sufficient lighting shall to maintain an illumination level on the decks for safe operation at night. The exterior lighting shall be energized from the 120 volt AC system.

Watertight, bulkhead mounted incandescent type fixtures shall be installed along the sides and ends of the deckhouse, on all deck levels. The lights furnished shall be similar to Pauluhn, model 707B. The exterior lighting for each deck level shall be divided into two circuits, port

and starboard, with each circuit controlled by a separate switch. The switches for the deck lighting shall be located in the pilothouse.

In addition to the bulkhead mounted fixtures, watertight step lights similar to Pauluhn, model 814S shall be provided and installed along the sides and ends of the deckhouse at the main deck level. The fixtures furnished shall be of the incandescent type and flush mounted in the bulkheads. The step lights shall be divided into two circuits, port and starboard, with each circuit controlled by a separate switch. The switches for the deck lighting shall be located in the pilothouse.

3. Emergency Lighting

Each vessel shall be provided with a separate, emergency 12 volt DC lighting system for interior and exterior lighting. The purpose of the system to be installed is to provide lighting for egress to/from the vessels. The emergency lighting is configured to allow for automatic operation upon failure of the AC lighting system or for manual (all-the-time) operation. Reference drawing #603-D720-02 is provided for guidance in designing the system.

For the interior spaces, 12-volt DC twin tube fluorescent fixtures, similar to a Guest model #836C-3 shall be provided and installed. For the exterior and machinery spaces, watertight, 12-volt DC incandescent fixtures shall be installed.

Emergency lighting units of the interior type shall be located as follows:

LOCATION	QUANTITY
Pilothouse	1
Electronics Room	2
Texas Deck Level:	
Passageway	1
Upper Deck Level:	
Lounge	1
Passageway	2
Main Deck Level:	
Galley	1
Mess Area	1
Passageway	2
Deck Storage Area	2
Engineer's Workshop	1
Interior Stairwell:	
Each Landing	1

In addition, for CLIN 0002, CLIN 0003, and CLIN 0004, emergency lights of the interior type shall be located as follows:

LOCATION	QUANTITY
Electronics Room	2
Texas Deck Level:	
Passageway	1
Upper Deck Lounge	1

In addition, for CLIN 0001 emergency lights of the interior type shall be located as follows:

LOCATION	QUANTITY
Office\Lounge	1
Engineer's Passageway	1

Emergency lighting units of the exterior type shall be located as follows:

LOCATION	QUANTITY
Pilothouse Deck	3
Half Deck	1
Texas Deck	2
Upper Deck	6
Main Deck	9
Upper Machinery Space	2
Generator Room	2
Steering Gear Room	2
Forward Stores	1
Forward Machinery Space	2
Lower Engine Room	4
Shaft Alley	1

In addition, for CLIN 0002, CLIN 0003, and CLIN 0004, emergency lights of the exterior type shall be located as follows:

LOCATION	QUANTITY
Half Deck	1
Texas Deck	1

D. FLOODLIGHTS

Marine rated, 500W quartz\halogen lamp floodlights similar to Phoenix model MS500QH shall be provided and installed on each vessel. The floodlights shall be shock mounted in the following locations:

LOCATION	QUANTITY	DIRECTION FACING
Upper Deck Level:		
Port - aft	1	Aft
Starboard aft	1	Aft
Main Deck Level:		
Port	2	Port
Starboard	2	Starboard
Port – forward	1	Forward
Starboard – forward	1	Forward
Port – aft	1	Aft
Starboard – aft	1	Aft

In addition for CLIN 0002, CLIN 0003, and CLIN 0004, the following floodlights shall be supplied and installed:

LOCATION	QUANTITY	DIRECTION FACING
Texas Deck Level:		
Port	2	Port
Starboard	2	Starboard
Port – aft	1	Aft
Starboard – aft	1	Aft

The floodlights shall be set up with no more than two lights on a circuit.

The switches for each circuit shall be located in the pilothouse except for the main deck port, forward and starboard, forward floodlights. The port, forward and the starboard, forward floodlights shall be installed with three way switches that allow for operation from the pilothouse or from inside the deckhouse at the forward main deck work area.

E. SEARCHLIGHTS

The Contractor shall provide and install two 1 kW, Xenon searchlights, similar to Carlisle & Finch, set up for 460 volt AC, three phase service.

The searchlights shall be mounted on the pilothouse top, with two lights mounted directly above the steering levers, facing forward. The searchlights shall be installed with

distant electric control for operation from the pilothouse console. The foundations for the lights shall be in accordance with Clause C330 of the contract.

The exterior surfaces of each searchlight shall be finished in white enamel. Each searchlight shall be provided with a canvas storage cover.

F. FLANKING LIGHTS

The Contractor shall provide and install four flanking lights, one located on each stern corner of the upper deck, port and starboard, and one located on each forward corner of the upper deck, port and starboard. The flanking lights are similar to Phoenix, model MRS 64/1000S, local hand control type searchlights.

G. NAVIGATION LIGHTS

Each vessel shall be furnished with a complete system of navigation lights in accordance with the USCG Navigation Rules, International and Inland. Each vessel will operate on the Western Rivers and the Ohio River System. See contract Clauses C001 and C003. The navigation lighting system shall also include USCG lights required for a "vessel not under command" and a "vessel restricted in her ability to maneuver."

The navigation lighting system shall be set up for 120 volt AC. All navigation lights provided shall be similar to figures 1164 to 1168 series, manufactured by Perko, except the whistle light provided by the air horn manufacturer (see contract Clause C472).

A supervised, solid-state, navigation light panel shall be supplied similar to those manufactured by J-Box, Marrero, LA (www.jboxinc.com) and installed in the pilothouse. The navigation light panel supplied shall include "tell-tale" panel alarms to indicate the failure of the lights primary bulb and indicate that the secondary bulb is in operation. The panel shall also incorporate circuits for the anchor light and the whistle light and a panel dimmer switch.

H. INSTRUMENT LIGHTING

All instrument lights and gauges in the pilothouse console shall be provided with lights. The lights shall have dimmer switches.

I. EQUIPMENT & CONVENIENCE RECEPTACLES

1. Equipment Connections & Receptacles

The swing meter, galley equipment, ice machines, trash compactor, washer, and dryer shall all be installed on dedicated circuits, with non-GFCI receptacles and breakers, unless required by the equipment manufacturer. Where equipment is supplied with plugs, the Contractor

shall install a dedicated, single receptacle for each different equipment's service. The voltage and phase required for each piece of equipment is dependent upon the equipment selected.

2. Interior Convenience Receptacles

All interior convenience receptacles shall be rated for 2 pole, 3 wire, 15 amp or 20 amp, 125 volt AC service. All receptacles, including GFCI receptacles, shall be hospital and/or industrial/institutional grade receptacles similar to those manufactured by Hubbell.

The receptacles listed below may be grouped on circuits with other receptacles serving the same space or area except that each galley counter top receptacle shall be installed on separate, dedicated circuits.

The following interior receptacles shall be furnished and installed for CLIN 0001:

Location	Type	Rating	Other
Pilothouse			
Port	Duplex	15 amp	
Starboard	Duplex	15 amp	
Counter-top	Duplex	20 amp	GFCI Receptacle
Staterooms (per each room)			
On a bulkhead	Duplex	15 amp	2 per room
Adjacent to mirrors	Duplex	15 amp	GFCI Receptacle
Toilet\Showers			
Adjacent to mirror	Duplex	15 amp	GFCI Receptacle
Captain's\Pilot's Staterooms (per each room)			
Near Desk	Duplex	20 amp	
Passageways			
Upper Deck Bhd	Duplex	20 amp	
Main Deck Bhd	Duplex	20 amp	
Deck Storage			
Port Bhd	Duplex	20 amp	
Starboard Bhd	Duplex	20 amp	

Crew's Lounge			
Near Desk	Duplex	20 amp	
Port Bulkhead	Duplex	15 amp	
Mess Area			
Fwd Bhd – Floor	Duplex	20 amp	GFCI Receptacle
TV Service – Fwd, High	Single	20 amp	Separate Circuit
Pantry Bulkhead	Duplex	20 amp	GFCI Receptacle
Galley			
Counter Top Level	Duplex	15 amp	GFCI Receptacles
Supply Total = 4			Separate Circuits
Upper Engine Room:			
Forward Bulkhead	Duplex	20 amp	
Port Bulkhead	Duplex	20 amp	
Stbd Bulkhead	Duplex	20 amp	
Aft Bulkhead	Duplex	20 amp	
Engineer's Workshop			
Counter Top Level	Duplex	20 amp	
Aft Bulkhead	Duplex	20 amp	
Generator Room	Duplex	20 amp	GFCI Protected
Steering Gear Room			
Port Bulkhead	Duplex	20 amp	
Starboard Bulkhead	Duplex	20 amp	

The following interior receptacles shall be furnished and installed for CLIN 0002, CLIN 0003, and CLIN 0004:

Location	Type	Rating	Other
Pilothouse			
Port	Duplex	15 amp	
Starboard	Duplex	15 amp	
Counter-top	Duplex	20 amp	GFCI Receptacle

Plenum Deck (Electronics Room)			
Aft Bulkhead	Duplex	20 amp	
Port Bulkhead	Duplex	20 amp	
Stbd Bulkhead	Duplex	20 amp	
Staterooms (per each room)			
On a bulkhead	Duplex	15 amp	2 per room
Adjacent to mirrors	Duplex	15 amp	GFCI Receptacle
Toilet\Showers			
Adjacent to mirror	Duplex	15 amp	GFCI Receptacle
Oiler's Stateroom			
Near Desk	Duplex	20 amp	
Passageways			
Texas Deck Bhd	Duplex	20 amp	
Upper Deck Bhd	Duplex	20 amp	
Main Deck Bhd	Duplex	20 amp	
Crew's Lounge			
Forward Bhd	Duplex	15 amp	
Aft Bulkhead	Duplex	15 amp	
Ship's Office			
Near Desk – Aft	Duplex	20 amp	
Near Desk – Fwd Port	Duplex	20 amp	
Near Desk – Fwd Stbd	Duplex	20 amp	
Aft Bulkhead	Duplex	15 amp	
Deck Storage			
Port Bhd	Duplex	20 amp	
Stbd Bhd	Duplex	20 amp	
Mess Area			
Fwd Bhd – Floor	Duplex	20 amp	GFCI Receptacle
TV Service – Fwd, High	Single	20 amp	Separate Circuit
Pantry Bulkhead	Duplex	20 amp	GFCI Receptacle

Galley			
Counter Top Level	Duplex	15 amp	GFCI Receptacles
Supply Total = 4			Separate Circuits
Engineer's Workshop			
Counter Top Level	Duplex	20 amp	
Aft Bulkhead	Duplex	20 amp	
Generator Room	Duplex	20 amp	GFCI Protected
Steering Gear Room			
Port Bhd	Duplex	20 amp	
Starboard Bhd	Duplex	20 amp	

3. Exterior & Waterproof Receptacles

All exterior and waterproof receptacles supplied shall be rated for 2 pole, 3 wire, 20 amp, 125 volt AC service. All receptacles supplied shall be similar to Pauluhn, model #2584B-125. GFCI circuit breakers shall be installed for the circuits serving the receptacles listed below.

The following waterproof receptacles shall be furnished and installed for each vessel:

Location	Type	Circuit Rating
Exterior		
Main Deck Forward	Duplex	20 amp
Main Deck Aft	Duplex	20 amp
Main Deck Port - Forward	Duplex	20 amp
Main Deck Port – Aft	Duplex	20 amp
Main Deck Stbd – Forward	Duplex	20 amp
Main Deck Stbd – Aft	Duplex	20 amp
Upper Deck Port	Duplex	20 amp
Upper Deck Stbd	Duplex	20 amp
Upper Deck Aft	Duplex	20 amp
Upper Deck – Frame #50	Duplex	20 amp
Pilothouse Stbd	Duplex	20 amp
Pilothouse Port	Duplex	20 amp
Pilothouse Aft	Duplex	20 amp
Forward Stores	Duplex	20 amp

Forward Machinery Space		
Port Bulkhead	Duplex	20 amp
Stbd Bulkhead	Duplex	20 amp
Aft Bulkhead	Duplex	20 amp
Lower Engine Room		
Forward Bulkhead	Duplex	20 amp
Aft Bulkhead	Duplex	20 amp
Port Bulkhead	Duplex	20 amp
Stbd Bulkhead	Duplex	20 amp
Shaft Alley	Duplex	20 amp

In addition, the following exterior receptacles shall be furnished and installed for CLIN 0002, CLIN 0003, and CLIN 0004:

Location	Type	Circuit Rating
Exterior		
Texas Deck Port	Duplex	20 amp
Texas Deck Starboard	Duplex	20 amp
Texas Deck Aft	Duplex	20 amp
Plenum Deck Aft	Duplex	20 amp

The receptacles may be grouped on circuits with other receptacles serving the same space or area. All receptacles shall be located a minimum of 3 feet above the deck or sole plating.

C735 ELECTRICAL POWER PLANT

A. CONTRACT DRAWINGS

CLIN 0001
557-B215-01, GENERAL ARRANGEMENT

CLIN 0002, CLIN 0003 & CLIN 0004
556-B215-01, GENERAL ARRANGEMENT

B. DIESEL GENERATOR SET REQUIREMENTS

The Contractor shall provide and install for each vessel two diesel generator sets as located on the contract drawings.

The diesel generator sets shall be a 4 stroke-cycle marine type, in-line 6 cylinder meeting ABS rules similar to a Caterpillar, model 3304B. Each diesel generator shall a

continuous rating of 105 kW minimum at 0.8 power factor at 60 Hz and 1800 rpm. The generators shall be set up to supply 480 volt AC, 3-phase, 3-wire, ungrounded, 60 Hz electrical power.

Each generator shall be equipped with an amortisseur winding and shall be capable of delivering 110 percent load for two hours without exceeding permissible limits of temperature rise. Each generator, along with its regulation and excitation systems shall be capable of supporting overload conditions as well as maintaining short circuit currents of such magnitude and duration as required to properly actuate selective tripping of downstream protective devices.

Each voltage regulator shall be a solid state volts-per-hertz voltage regulator and shall be capable of automatically maintaining constant rated generator voltage throughout the load range of the generator. Each voltage regulator shall be capable of maintaining steady state regulation within 1 percent of rated voltage from no load condition to 110 percent rated load condition and shall include a voltage adjusting rheostat with a plus and minus 10 percent adjustment range.

The voltage dip on each generator shall not exceed 25 percent while starting the largest motor on the vessel across-the-line with the main bus load at 30 percent capacity.

Each diesel engine and generator shall be provided with the following features and options:

- Approved by ABS.
- Voltage droop on each generator that is adjustable for parallel operation.
- A drip proof, guarded enclosure, and shall be air cooled and self-ventilated.
- A brushless excitation system and an automatic solid state voltage regulator.
- An engine mounted fuel pump with a minimum lift of 10 feet.
- Set up for battery start.
- Dedicated DC control system including battery and charger for controls and automatic shutdowns.
- Electronic governor.
- Emergency stop pushbutton.

- Turbocharged-aftercooled.
- Configured as a closed jacket water cooling system using keel coolers. Coolant level sensors and gauges to be provided.
- Auxiliary expansion tanks and/or larger jacket water pumps if required to handle the cooling system volume.
- A jacketed manifold and dry exhaust system.
- Each engine turbocharger and exhaust manifold shall be insulated or jacketed to maintain an outer skin temperature of less than 125 degrees F.
- Each engine shall be equipped with a crankcase vent filter/collector system similar to a NELSON EcoVent Recirculator. The EcoVent shall be supplied with a manometer and the drain line shall be returned directly to the engine oil sump, below the oil level.
- Each generator supplied with an electric heater.
- The water, lube and fuel lines to all engine connections shall be fitted with USCG and ABS approved flexible connections.
- Each diesel engine oil sump shall be fitted with a ball valve and quick disconnect fitting so that oil can be added to or drawn from the sumps.
- A steel base frame with drip pan under the engine.
- Mounted on vibration mounts in order to isolate engine vibration. See contract Clause C180 for noise and vibration requirements.
- Each engine shall be supplied with lifting eyes and mounting support. The Contractor is responsible for supplying suitable foundations for the engines and generators.
- Switchgear controls and instrumentation shall be provided and installed as outlined in contract Clause C740.
- Load bank testing of the diesel engine and generator shall be in accordance with Section E of the contract.
- Four sets of manuals shall be supplied for the diesel engines and generator sets. See contract Clause H16.
- Spare parts in accordance with contract Clause C805.

The diesel engines and generator sets and all associated equipment shall be installed in strict compliance with the engine manufacturer's recommendations and the installation shall be approved by the manufacturer's field representative.

C. DIESEL ENGINE COMBUSTION AIR

Each generator diesel engine shall be fitted with a dedicated source of outside air for combustion. The combustion inlet shall be protected from rain and shall be fitted with a bug screen. Provisions shall be made for closing the inlet in case of a fire.

D. GENERATOR SET STARTING/STOPPING

Each generator set shall be set up for starting and stopping locally, at the generator set in the generator room.

The diesel generator sets shall be electric start. Each generator set shall be provided with 24 volt DC starting including starter motor, batteries, battery charging alternator, ammeter, and regulator. See Clause C706.

The starting batteries shall be marine, heavy duty, rated in accordance with the engine manufacturer's recommendations. The Contractor shall provide and install a battery box with cover for the diesel engine starting batteries. The battery boxes shall be located in the generator room.

E. GENERATOR SET ALARMS & INSTRUMENTATION

The diesel generator sets shall be set up to automatically shutdown upon activation of the following alarms:

- Engine overspeed
- Low lube oil pressure
- High jacket water temperature

Alarms shall be provided for each generator set. The alarm panels shall be located both in the generator room and in the engineer's workshop. The panels shall be set up such that silencing an alarm at one panel automatically silences the alarm at a second panel.

The alarms shall have both audible and visual signals at both the generator room panel and the engineer's workshop panel. The alarms shall be provided with fault light lock-in circuitry, lockout of additional alarm lights after engine shutoff, alarm silence buttons, and circuit test button.

The following alarms shall be included for each generator set at both the generator room panel and the engineer's workshop panel:

- Engine overspeed
- Low lube oil pressure
- High jacket water temperature
- Low starting battery voltage

The diesel generator manufacturer shall provide a local control panel, with mechanical gauges, installed at each generator set. Each panel shall have, as a minimum, the following instrumentation:

• Engine hour meter	Tachometer
• Jacket water temperature gauge (degrees F)	Watt meter
• Lube oil pressure gauge (psi)	Volt meter
• Fuel pressure gauge (psi)	Amp meter

An instrument panel shall be provided and installed for each generator set in the engineer's workshop. The following instrumentation shall be included on the panel:

- Generator "power available" indicator
- Jacket water temperature gauge (degrees F)
- Lube oil pressure gauge (psi)

The following instrumentation and alarms shall be installed in the pilothouse for each generator set:

- Generator set running light
- Generator trouble light and audible alarm

The diesel generator trouble alarm shall be provided with fault light lock-in circuitry, lockout of additional alarm lights after engine shutoff, and alarm silence button. The instrument panel installed in the pilothouse shall be furnished with a dimmer switch.

C740 SWITCHBOARD & POWER CONTROL

A. CONTRACT DRAWING

CLIN 0001
557-B215-01, GENERAL ARRANGEMENT

CLIN 0002, CLIN 0003 & CLIN 0004
556-B215-01, GENERAL ARRANGEMENT

B. OVERVIEW

A switchboard shall be provided and installed for the electrical systems and shall be located as shown on the above contract drawings. Front layouts, catalog cutsheets of major components, and diagrams of the switchboard shall be submitted for review by the COR prior to the purchase of any equipment by the Contractor.

The switchboard shall be configured to contain:

- A generator control section
- A shore power section
- A 480 volt AC distribution section

The generator control section shall enable paralleling of the generator sets. The switchboard shall also be configured to prevent paralleling between the shore power and either generator set.

The switchboard shall be designed, constructed, and installed in accordance with ABS rules.

C. SWITCHBOARD REQUIREMENTS

1. General Requirements

The switchboard shall be front accessible, and fully serviceable from the front. It shall be freestanding and adequately supported to resist vibration. Switchboard shall be set up to provide for top and bottom cable entry.

Space heaters for the switchboard sections shall be provided to prevent condensation within the enclosure during idle periods. The space heaters shall be energized from the ship's service 208Y/120 volt AC system.

2. Generator Set Switchboard Sections (Parallel Operation)

The switchboard shall include sections for monitoring and control of each generator set as well as a synchronizing section for paralleling of the generator sets. For each generator set, the associated switchboard section shall include the following components and features:

- Automatic synchronizer.

- "AUTO-MANUAL" synchronizer selector switch.

- Generator power available indicating light.
- Voltage regulator control rheostat.
- Speed control rheostat.
- Voltmeter and selector switch.
- Ammeter and selector switch.
- Frequency meter.
- Wattmeter.
- Multifunctional Amp transducer.
- Multifunctional Volt transducer.
- Multifunctional Watt transducer.
- Frequency transducer.
- Manual "ON-OFF" switch with indicating light for the switchboard space heater.
- "ON-OFF-AUTO" switch with indicating light for the associated generator space heater. When in the "AUTO" position, the space heater shall be energized whenever the associated generator breaker is open.

The synchronizing section of the switchboard shall include the following components:

- Synchroscope.
- Selector switch to select the incoming generator.
- Generator breaker "CLOSE" pushbutton for the each generator.
- Speed control rheostat for each generator.
- One voltmeter for each generator.
- One frequency meter for each generator.

An automatic synchronizer shall be provided for each generator that will automatically synchronize the incoming generator, as selected by the generator selector switch, with the 480 volt AC bus and close the generator breaker when the two power sources are synchronized. Automatic synchronization, breaker closing and load balancing, shall occur:

- When the breaker close pushbutton is pressed and the synchronizer selector switch is in the "LOCAL AUTO" position.
- When the synchronizer selector switch is in the "REMOTE AUTO" position.

When in the "MANUAL" position, pushing the close pushbutton will by-pass the automatic synchronizer and close the breaker of the selected generator.

Each generator breaker shall be provided with reverse power protection that will trip the generator under reverse power conditions. The setting shall be between 8% and 15% of the main generator rating. Each generator breaker shall also be interlocked such that the generator breaker cannot be closed unless its associated generator is generating power. Each generator breaker shall also open if its associated generator voltage collapses.

3. Shore Power Operation – Switchboard Section

The switchboard shall include a section for monitoring the incoming shore power. The shore power section of the switchboard shall include the following components and features:

- Shore power available indicating light.
- Voltmeter.
- Ammeter.
- Frequency meter.
- Phase sequence/loss system.

The phase sequence/loss system for the shore power connection consists of:

- A phase sensing relay with correct phase light (green), neutral position, and incorrect phase (red)

- Shore power reversed phase indicating light.

- Three-position shore power phase reversal switch with "normal" and "reversed" settings separated by an "OFF" switch position.

To prevent paralleling between the shore power and the generator sets, electrical and mechanical (safe/run device for the shore power service) interlocking shall be provided. The main bus shall only be energized at any given time by the generator sets or the shore power.

4. Isolation Ground Bus & Ground Detection

The switchboard shall also incorporate an isolation ground bus. Connections shall be made from AC system distribution panels back to the isolation ground bus in the switchboard. Grounding shall then be made to the starboard diesel generator engine.

For ground detection, the switchboard shall also include:

- Ground detection lights and test switch for the 480 volt AC system.

- Ground detection ammeter and test switch for the 208Y/120 volt AC system.

5. Switchboard Breakers

a. General Circuit Breaker Requirements

The interrupting rating of each circuit breaker shall be suitable for the maximum short circuit current available at the point of application as determined by short circuit analysis. The circuit breakers provided shall have a minimum interrupting rating of 10,000A RMS symmetrical at their respective voltage level, and shall be capable of interrupting without damage, the maximum fault current at the breaker from the system.

Circuit breaker coordination and selectivity shall be provided so that, for a fault on any part of the system, the fault is cleared by the protective device that is closest to the point of fault without tripping upstream breakers in accordance with USCG, 46 CFR, subchapter J, subpart 111.51.

b. Generator Sets & Shore Power Sections

The generator breakers shall be provided with adjustable time delay under voltage trip devices. The generator and shore power breakers shall be provided with trip characteristics to provide maximum selective coordination with downstream circuit breakers and motor operations.

The switchboard shall contain molded case, electronic trip device circuit breakers for the generators, and for the shore power service.

The main section of the switchboard shall contain, as a minimum, the breakers for the generator sets, the shore power (two breakers), the off-vessel power service, the transformer feed, the steering and flanking gear motors, the feeds to the 480 volt AC distribution section. There also should be two spare breakers in this section.

c. 480 Volt Distribution Section

Molded case, draw-out type, circuit breakers shall be provided for all of the equipment required for control of the 480 volt, three-phase, 60 Hz equipment, and for the 480 volt AC distribution system.

The 480 volt distribution bus circuit breakers shall be manually operated and provided with inverse time, ambient-temperature-compensated, thermal magnetic trips and shall have interchangeable thermal trip units and adjustable magnetic trips in ratings where available.

As a minimum, four spare breakers shall be provided. The spare breakers shall have trip ratings representative of the trip ratings furnished for other loads connected to the main switchboard.

Any remaining “spaces” for circuit breakers shall be fitted with plug-in assemblies of appropriate frame size and blank cover plates.

Single phase loads shall be distributed as evenly as possible among the three phases of the three-phase, 4-wire system, to achieve optimum phase current balance.

C745 DISTRIBUTION PANELBOARDS

A. DESCRIPTION OF WORK

Power and lighting panelboards shall be used to supplement the distribution section of the switchboard for all of the electrical loads on the vessels. Panelboards shall be located so that they are readily accessible.

The panelboards shall be dead front circuit breaker type equipped with molded case circuit breakers. All panelboards shall be fitted with isolation ground bars.

All panelboards shall be equipped with main circuit breakers for the feed into the panelboard.

All panelboards and breakers shall be marked in accordance with contract Clause C702.

B. AC SYSTEM CIRCUIT BREAKERS

The distribution panelboards shall be connected to feeder circuit breakers in the 480-volt main switchboard as well as to the 480-volt to 208Y/120 volt transformer feed.

As far as practicable, load distribution should be such that the distribution panelboards shall feed electrical loads that are located in their respective areas.

Single phase loads shall be distributed as evenly as possible among the three phases of the three phase, 4-wire system, to achieve optimum phase current balance.

The panelboards shall be equipped with molded case circuit breakers with ratings and the number of poles to satisfy system requirements. The 208Y/120 volt AC panelboards shall be similar to Square D. Stab (plug in) type circuit breakers shall be used.

The circuit breakers in all the panelboards shall have quick make, quick break, trip-free mechanism. The interrupting rating of each circuit breaker shall be suitable for the maximum short circuit current available at the point of application as determined by short circuit analysis. The circuit breakers provided shall have a minimum interrupting rating of 10,000 RMS symmetrical amperes at their respective voltage levels, and shall be capable of interrupting without damage to the fault current available at the breaker from the system.

In addition, each of the distribution panelboards shall be provided with a minimum of four spare breakers, with trip ratings representative of trip ratings furnished for other loads.

Circuit breakers for the motor controllers shall be in accordance with contract Clause C750. Breakers for the transformer shall be in accordance with contract Clause C755.

C. DC SYSTEM CIRCUIT BREAKERS

The DC system distribution panelboard and circuit breakers shall be in accordance with contract Clause C706.

C750 MOTORS AND CONTROLLERS

A. MOTORS

All motors shall be drip-proof protected, except those exposed to the weather, which shall be waterproof construction. All motors shall be NEMA type, and shall be sized and designed for continuous operation of the driven auxiliary at rated capacity.

All motors shall be designed for an ambient temperature of 50 degrees C.

All motors shall be equipped with anti-friction bearings. All motors using grease lubricated bearings shall be provided with grease fittings and shall have positive means for preventing grease from being forced out upon the motor windings.

B. CONTROLLERS

All controllers shall have manually reset thermal overload protection, line disconnect device, and integral start/stop push-button set. Controllers arranged for automatic or remote operation shall also be provided with Hand-Auto or Local-Remote selector switch. Exterior mounted controllers shall be mounted in watertight enclosures.

Controllers for the small HP motors shall be full-voltage magnetically operated type. In cases where starting motors across the line can produce 25% voltage dip on the system with the bus at 30% capacity, reduced voltage starters shall be used.

C. MOTOR CONTROLLER – BREAKER COORDINATION CIRCUITS

Switchboard breakers and panelboard breakers for motors and motor controllers shall sized and installed in accordance with the following:

- Motor feeder circuit breakers installed in a switchboard section or motor panel shall be rated near to and not more than 250% of the motor FLA.

- The motor control circuits shall be in accordance with MDC Sketch #750A.

- All motor controllers shall have short circuit and ground fault protection by circuit breaker rated at AT = 125% FLA and IT =10 x FLA of the motor.

- See MDC Sketch #750B for the motor circuit logic.

D. MOTOR UNDER-VOLTAGE PROTECTION

All motor controllers shall be provided protection against an under-voltage condition. Protection against under-voltage shall be either low-voltage protection (LVP) or low-voltage release (LVR).

The motor controllers for the following systems shall be provided and installed with low-voltage release (LVR):

- Steer gear pumps
- Bilge pumps
- Fire main pump
- Air compressors
- Engine room supply and exhaust fans
- Generator room supply and exhaust fans

All motor controllers not having LVR shall be provided and installed with low-voltage protection (LVP) unless the motor is less than 2 hp.

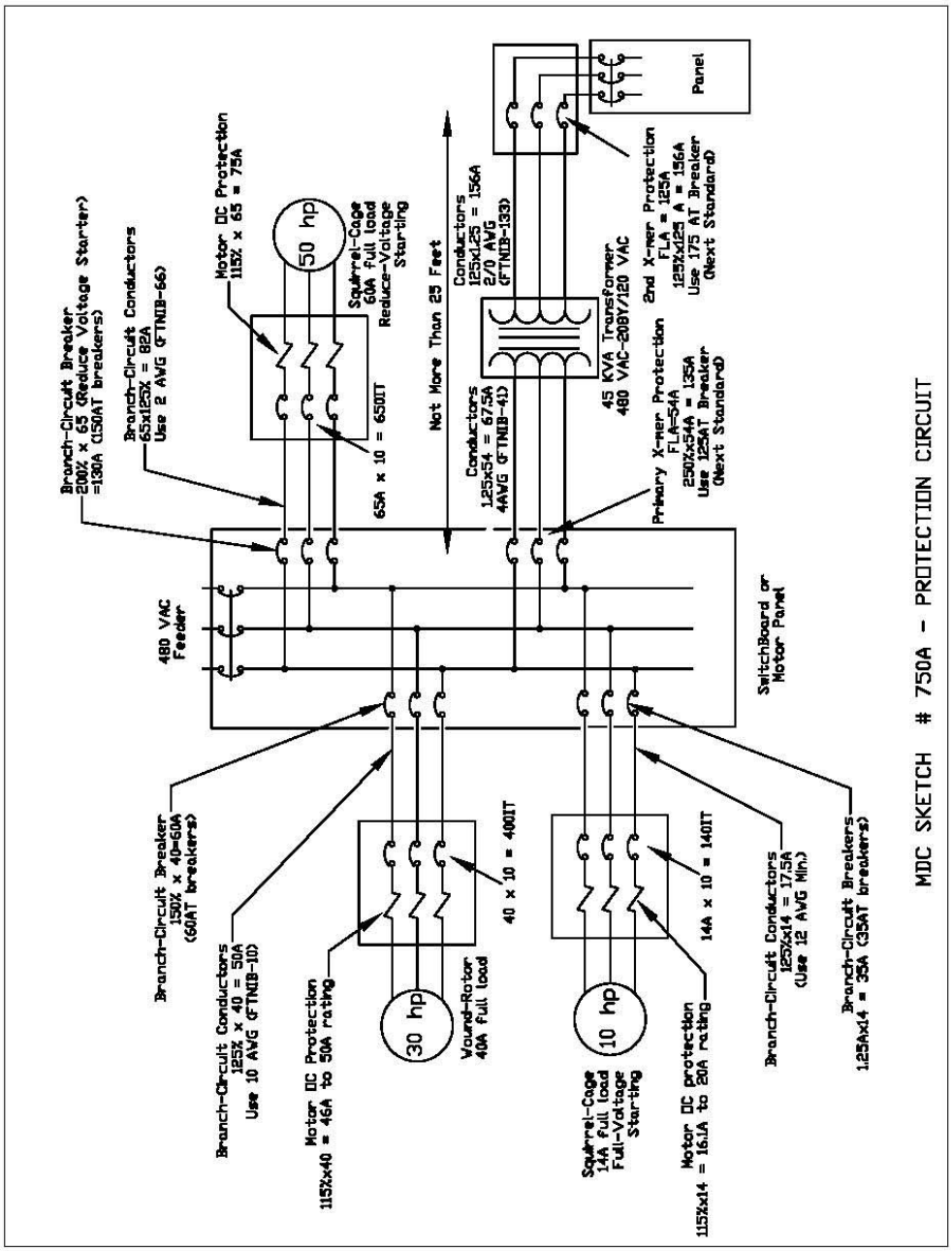
Branch-Circuit Breaker
200% x 65 (Reduce Voltage Starter)
=130A (150AT breakers)
Branch-Circuit Conductors
65x125% = 82A
Use 2 AWG (FTNIB-66)
Motor OC Protection
115% x 65 = 75A
50 hp
Squirrel-Cage
60A full load
Reduce-Voltage
Starting
65A x 10 = 650IT
Not More Than 25 Feet
Conductors
125x54 = 67.5A
4AWG (FTNIB-41)
Conductors
125x1.25 = 156A
2/0 AWG
(FTNIB-133)
45 KVA Transformer
480 VAC-208Y/120 VAC
Primary X-mer Protection
FLA=54A
250%x54A = 135A
Use 125AT Breaker
(Next Standard)
2nd X-mer Protection
FLA = 125A
125%x125 A = 156A
Use 175 AT Breaker
(Next Standard)
Panel
480 VAC
Feeder
SwitchBoard or
Motor Panel
Branch-Circuit Breaker
150% x 40=60A
(60AT breakers)
Branch-Circuit Conductors
125% x 40 = 50A
Use 10 AWG (FTNIB-10)
Motor OC Protection
115%x40 = 46A to 50A rating
30 hp
Wound-Rotor
40A full load
40 x 10 = 400IT
Squirrel-Cage
14A full load
Full-Voltage
Starting
10 hp
Motor OC protection
115%x14 = 16.1A to 20A rating
14A x 10 = 140IT
Branch-Circuit Conductors
125%x14 = 17.5A
(Use 12 AWG Min.)
Branch-Circuit Breakers
1.25Ax14 = 35A (35AT breakers)
MDC SKETCH # 750A - PROTECTION CIRCUIT

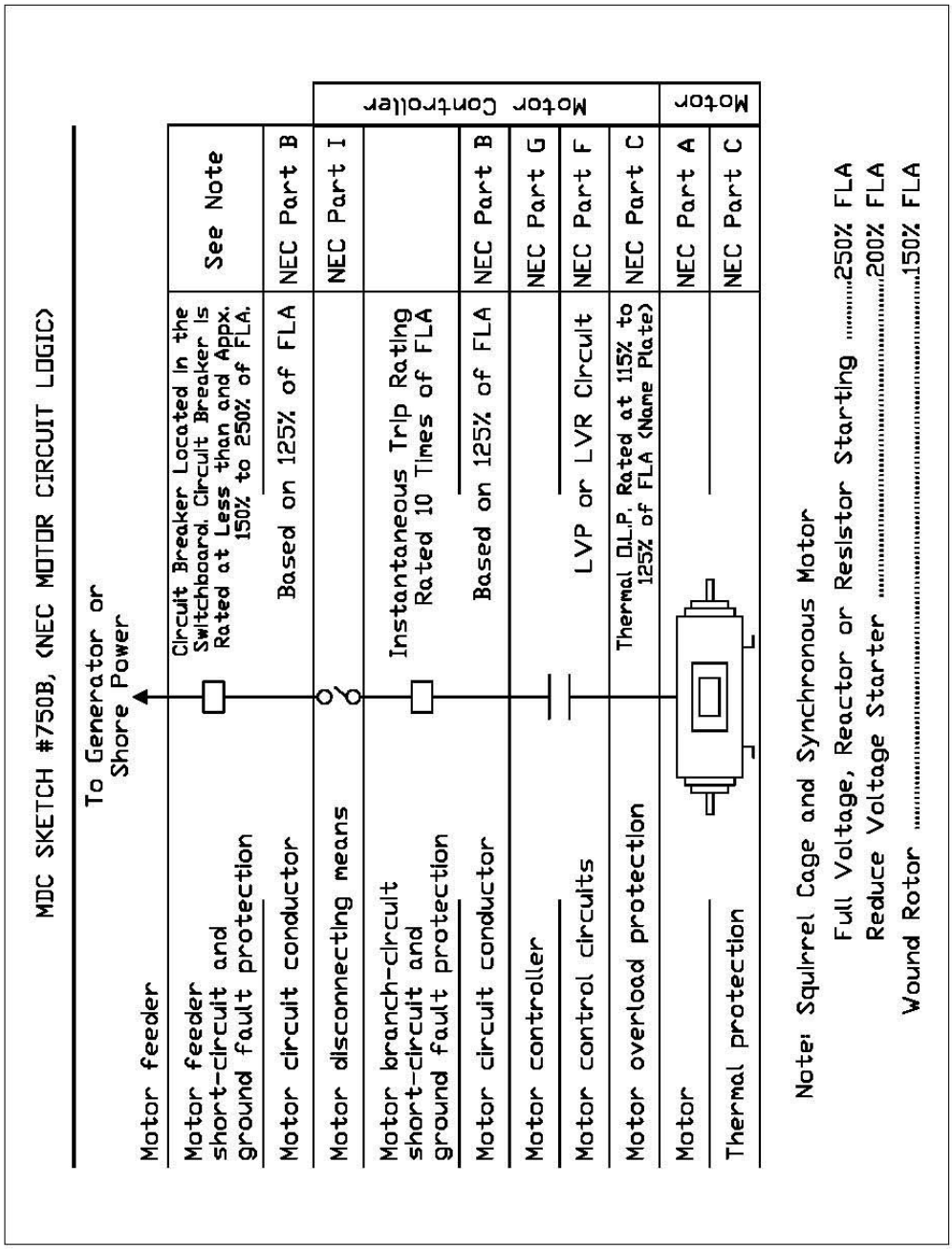
MDC SKETCH #750B, (NEC MOTOR CIRCUIT LOGIC)
To Generator or Shore Power
Motor feeder
Motor feeder short-circuit and ground fault protection
Circuit Breaker Located in the Switchboard. Circuit Breaker Is Rated at Less than and Appx. 150% to 250% of FLA.
See Note
Motor circuit conductor
Based on 125% of FLA
NEC Part B
Motor disconnecting means
NEC Part I
Motor branch-circuit short-circuit and ground fault protection
Instantaneous Trip Rating Rated 10 Times of FLA
Motor circuit conductor
Based on 125% of FLA
NEC Part B
Motor controller
NEC Part G
Motor control circuits
LVP or LVR Circuit
NEC Part F
Motor overload protection
Thermal O.L.P. Rated at 115% to 125% of FLA (Name Plate)
NEC Part C
Motor
NEC Part A
Thermal protection
NEC Part C
Motor Controller
Motor
Note: Squirrel Cage and Synchronous Motor
Full Voltage, Reactor or Resistor Starting .....250% FLA
Reduce Voltage Starter .....200% FLA
Wound Rotor .....150% FLA

C755 TRANSFORMERS

A. TRANSFORMER SIZING REQUIREMENTS

The Contractor shall provide and install one transformer to connect the 480 volt AC, three phase, 3-wire, 60 Hz system to the 208Y/120 volt AC, three phase, 4 wire, 60 Hz system.

The transformer shall be sized based on the results of the AC Load Analysis and the development of the AC One-Line Diagram. See contract Clauses C710 and C720.

B. GENERAL REQUIREMENTS

The transformer shall be three phase, 60 Hz, marine dry type, convection air cooled and shall be adequately sized to satisfy system requirements.

The secondary system shall be bonded at the transformer.

The transformer selected shall be suitable for exterior mounting with the transformer being mounted on the aft upper deck, above the switchboard. The Contractor is responsible for providing a foundation beneath the transformer.

C. INSULATION

The transformer shall have class H insulation and copper conductors. The design ambient temperature shall be a minimum of 50°C. The transformer shall be designed to deliver rated KVA continuously without the benefit of internal fans to circulate air. All insulating materials shall be in accordance with NEMA standards.

Provisions shall be made to completely isolate the core and coil from the enclosure. There should be no metal-to-metal contact. Rubber vibration isolating pads shall be installed by the manufacturer between the core and the enclosure. The core should then be visibly grounded to the enclosure by means of a flexible grounding conductor.

D. CONSTRUCTION

The enclosure shall be constructed of heavy gauge sheet steel, shall be drip-proof, and shall be given a suitable corrosion resisting treatment. The entire assembly shall be rigid self-supporting construction. Panels shall be capable of being readily open or removed for access to interior for installation, maintenance, and repair.

E. TRANSFORMER CIRCUIT BREAKERS

The transformer feeder circuit breaker shall be sized to be near to but not more than 250% of the primary current. The secondary transformer circuit breaker shall be rated or sized at 125% or the next standard size of circuit breaker. See MDC Sketch #750A.

C760 SHORE POWER & OFF VESSEL SERVICES

A. SHORE POWER SERVICE

Each towboat shall be set up to accept 480 volt AC, three phase, 100 amp shore power service.

The Contractor shall provide and install two reverse service (inlet angle junction box), shore power (load making, load breaking) receptacles on each vessel. The use of this type of receptacle and plug shall allow the shore power circuit breaker to remain closed in the event of low voltage or loss of power from shore.

The reverse service receptacles to be supplied for each vessel shall be similar to a MELTRIC, model #31-64243. The corresponding connectors to be supplied for use with the receptacles shall be similar to a MELTRIC, model #31-68243.

For CLIN 0001, CLIN 0003, and CLIN 0004, the Contractor shall also provide 100 feet of 4-conductor shore power cable for 100 amp service. For CLIN 0002, the Contractor shall also provide 125 feet of 4-conductor shore power cable for 100 amp service.

One end of the cable shall be fitted with the MELTRIC connector for use on the vessel. For CLIN 0001, the shore side end of the cable shall be fitted with a plug similar to a Bryant. Model #4100P7W rated for 480 volt, three phase, 100 amp service. For CLIN 0002, CLIN 0003, and CLIN 0004, the second end of the cable shall be set up for use on the shore side and shall be fitted with a Government furnished connector to match the shore side service.

One shore power receptacle shall be located on the starboard side of each vessel and the second shore power receptacle shall be located on the port side of each vessel. The shore power receptacles shall be located at midships.

The shore power receptacles shall be labeled for operation in accordance with contract Clause C702.

B. OFF VESSEL SERVICE

Each towboat shall be set up to provide off-vessel power service. The service to be provided is 480 volt AC, 100 amp, three phase power.

The Contractor shall provide and install off-vessel power receptacles on the port and starboard side of each vessel.

The receptacles provided shall be similar to a Load Breaking MELTRIC model #31-64243, rated for 480 volt, 100 amp, 3-pole, 4-wire service with steel angle/junction box. The off-vessel service shall be fed through a circuit breaker mounted in the main switchboard.

The Contractor shall also provide a 100 foot length of 4 conductor power cable for the off-vessel service. One end of the cable shall be fitted with a plug similar to a Load Breaking MELTRIC Male Plug, model #31-68243 and for CLIN 0001, the other end of the cable shall be fitted with a Bryant model #4100C7W connector. For CLIN 0002, CLIN 0003, and CLIN 0004, connectors to match the off-vessel receptacle shall be Government furnished.

The off-vessel receptacle shall be labeled for operation in accordance with contract Clause C702.

C765 COMMUNICATIONS EQUIPMENT

A. PUBLIC ADDRESS/LOUDHAILER SYSTEM

A public address/loudhailer system similar to a RAYTHEON, model RAY-430 shall be provided and installed in order to provide communication between the pilothouse and the stations listed below. The system shall be provided with the following basic components and features:

1. Master Control Unit

The master control unit is located in the pilothouse that shall include a portable microphone handset, with a press-to-talk switch and a 15-foot retractable coiled cord, and an internal speaker with volume controls for the microphone and talkback circuits. Controls shall consist of a power switch, and a selector for the talkback circuits or the loudhailer. The unit shall be powered from the 12 volt DC system.

For CLIN 0002, a second master control unit shall be supplied and installed in the ship's office.

2. Talk Back, Hands-Free Stations

Talk back, hands free stations shall be provided and located on the foredeck, the main deck, port and starboard by the fuel fill stations, and the upper deck by the utility boat.

3. High Powered Loudspeakers

A high powered loudspeaker shall be located in the overhead, on the forward Texas Deck and a second speaker shall be located on the aft end of Texas Deck.

4. Automatic Foghorn Capability

The foghorn feature of the unit shall be equipped with six preprogrammed fog signals meeting the requirements of the USCG International and Inland Rules-of-the-Road.

B. INTERIOR COMMUNICATION

Interior communications shall be provided by a fixed, two-way calling and voice communication system. The system shall be powered from a main or reserve power supply that is independent of the vessel's electrical system.

For CLIN 0001, stations shall be provided in the following locations:

Captain's Stateroom	Mess Area
Pilot's Stateroom	Upper Machinery Space
Engineer's Stateroom	Engineer's Workshop
Crew's Stateroom – Forward	Generator Room
Crew's Stateroom – Aft	Steering Gear Room
Deck Storage	Forward Machinery Space
Crew's Lounge	Lower Engine Room

For CLIN 0002, CLIN 0003, and CLIN 0004, stations shall be provided in the following locations:

Captain's Stateroom	Main Deck Passageway
Pilot's Stateroom	Upper Machinery Space
Ship's Office	Engineer's Workshop
Crew's Lounge	Generator Room
Upper Deck Passageway	Steering Gear Room
Deck Storage	Forward Machinery Space
Mess Area	Lower Engine Room

A "call signaling" horn and flashing light shall be installed in the upper engine room, generator room, steering gear room, machinery space, and lower engine room to alert personnel when those stations are being called. Headsets shall be provided at those stations.

For CLIN 0001, CLIN 0003, and CLIN 0004, master control unit shall be installed in the pilothouse. For CLIN 0002, master control units shall be installed in the pilothouse as well as in the ship's office.

C770 NAVIGATION EQUIPMENT

A. GENERAL REQUIREMENTS

Navigation equipment shall be furnished for each towboat in accordance with USCG Regulations 33 CFR, Subchapter P - Part 164, Navigation Safety Regulations. The equipment provided shall allow for operation on the Mississippi River and the Ohio River Systems.

As a minimum, the following equipment shall be provided and installed:

- Two radars
- One fathometer (depth sounder) with transducers port and starboard
- One swing meter
- One GPS/DGPS
- Two VHF radios with antennas
- One air horn

Appropriate navigation lights and shapes (day markers) as required for operation on the Mississippi River and the Ohio River Systems shall be provided for the vessel in accordance with the USCG Navigation Rules International-Inland. The installation of the navigation lights and the searchlights are defined in contract Clause C730.

The Contractor shall supply and install on the starboard towknee, a receptacle that allows for plugging in a portable, remote transducer for the depth sounder. The Contractor shall supply the remote transducer on a boom along with the matching plug for the receptacle.

For CLIN 0002, three additional VHF radios shall be supplied. The radios shall be installed in the crew's lounge, ship's office, and the mess area.

C. DISTRICT RADIO

For CLIN 0001, CLIN 0003 and CLIN 0004, a district radio will be supplied as Government furnished equipment. The Contractor shall install the radio in the pilothouse.

D. AIR HORN REQUIREMENTS

An air horn, similar to a Kahlenberg model Q3-A, figure #413 air horn with light bracket and M-300 whistle light (clear lens) shall be provide and installed. The horn, whistle light, and light bracket shall be chrome plated. The air horn shall be supplied with a bronze manual whistle valve. Air for the horn shall be supplied from a dedicated air compressor and receiver similar to those available from Kahlenberg. See contract Clause C690 for air receiver requirements.

E. WIND MONITOR

A wind monitoring system similar to those manufactured by R.M. Young Company shall be supplied and installed. A Wind Monitoring Model #05106 MA (Marine Use), shall be provided and installed on the pilothouse top. A Marine Wind Tracker Model #06206 shall be installed in the pilothouse. A signal line surge protector, model #19120 shall be provided and 5-conductor, shielded, 22 AWG sensor cabling, model #18446, shall be used throughout the system.

The system requires 24 volt DC power. The Contractor shall supply and install a 12 volt to 24 volt DC converter to feed power from the 12 volt DC system to the 24 volt DC system.

C800 SPARE PARTS

C805 MAJOR EQUIPMENT

The following spare parts shall be furnished for each vessel:

A. PROPULSION EQUIPMENT

Description	Quantity	Packaging
Propeller – Left Hand	1	OUTSIDE
Propeller – Right Hand	1	OUTSIDE
Interchangeable Propeller Shafts With a set of	2 shafts/sets	OUTSIDE
Keys		PROTECTED
Propeller Nuts		PROTECTED
Fairwater Caps		PROTECTED
Steering Rudders (Interchangeable)	4	OUTSIDE
Flanking Rudders (Interchangeable)	4	OUTSIDE
Steering Rudder Cylinder	1	PROTECTED
Flanking Rudder Cylinder	1	PROTECTED
Steering Rudder Jockey Bar	1 bar	PROTECTED
Flanking Rudder Jockey Bar	1 bar	PROTECTED

The spare jockey bars shall be mounted on a bulkhead in the steering gear room.

Engine Equipment

Main Engine Air Starting Motor	1	PROTECTED

B. FILTERS

Description	Quantity	Packaging
Main Engine Filters:		
Air Cleaner Elements	1 case	CONSUMABLE
Fuel Oil	1 case	CONSUMABLE
Lube Oil	1 case	CONSUMABLE
Crankcase Vent Filter Elements	1 case	CONSUMABLE
RACOR Filter Elements	1 case	CONSUMABLE
Marine Transmission Filters	1 case	CONSUMABLE
Steering Hydraulics	1 case	CONSUMABLE
Diesel Generator Engine Filters:		
Air Cleaner Elements	1 case	CONSUMABLE
Fuel Oil	1 case	CONSUMABLE
Lube Oil	1 case	CONSUMABLE
Crankcase Vent Filter Elements	1 case	CONSUMABLE
RACOR Filter Elements	1 case	CONSUMABLE
AutoCrane Hydraulic Filters	1 case	CONSUMABLE

Refer to Section D of the contract for packing and marking of spare parts.

C810 OTHER EQUIPMENT

The following spare parts and materials shall be furnished for each vessel:

Description	Quantity	Packaging
Window Wipers:		
One spare wiper blade shall be provided For each pilothouse window wiper	1 per window	CONSUMABLE
Searchlight Bulbs	2 bulbs	CONSUMABLE
Flanking Light Bulbs	1 case	CONSUMABLE

Navigation Light Bulbs	1 case	CONSUMABLE
Ice Machine Water Filters	1 case	CONSUMABLE
Potable Water System Filter Cartridges		
Filling Filters	1 case	CONSUMABLE
Tank Exit Filters	1 case	CONSUMABLE

Refer to Section D of the contract for packing and marking of spare parts.

THIS PAGE INTENTIONALLY LEFT BLANK

PART I - THE SCHEDULE - SECTION D
PACKAGING AND MARKING

TABLE OF CONTENTS

CLAUSE PAGE

D01 PACKAGING 2

D02 MARKING 3

PART I - THE SCHEDULE - SECTION D
PACKAGING AND MARKING

D01 PACKAGING

All Spare Parts shall be packaged by the Contractor for delivery and storage.

All Spare Parts shall be placed aboard the appropriate vessel, or loaded on Contractor-furnished trucks by the Contractor after they have been packaged and marked by the Contractor in accordance with the requirements of this section.

Spare Parts and materials are divided into two types based on their manner of long-term storage. All spares and materials shall be preserved for either long term "outside" storage or packaged for long term "protected" storage.

"Consumables" such as bulbs, filters, paint and hardware shall be stored aboard the vessel and do not need to be marked in accordance with Section.

"OUTSIDE" Storage Spare Parts and materials are intended to be stored for extended (two to five years) periods of time outdoors. These parts will be preserved with a paint or other preservative coating acceptable to the manufacturer and the COR; all threaded parts will be coated or filled with preservative and plastic pipe caps or plugs inserted.

"OUTSIDE" spare parts shall be fitted with contractor furnished pallets, or fixtures to raise them off the ground during storage and provide a lifting rig for moving them by crane, forklift and truck.

"PROTECTED" Storage Spare Parts are intended to be stored for extended (two to five years) periods of time in unheated warehouses.

"PROTECTED" Storage Spare Parts shall be coated with paint and other preservative coating systems as recommended by the manufacturer and acceptable to the COR and packaged for mechanical and physical protection as accepted by the Contracting Officer's Representative.

D02 MARKING

All Spare Parts and materials shall be marked or labeled by the Contractor.

All "OUTSIDE" spare parts and materials shall be marked with a stencil, in paint of a contrasting color, in at least three places, with letters not less than 3-inches high, with the following information:

VESSEL NAME
CONTRACT NUMBER
NAME OF PART (COMPLETED BY THE CONTRACTOR)
DRAWING REFERENCE (COMPLETED BY THE CONTRACTOR)
MANUFACTURER (COMPLETED BY THE CONTRACTOR)
YEAR OF MANUFACTURE (COMPLETED BY THE CONTRACTOR)
OTHER IDENTIFYING INFORMATION

Alternately, the preceding identification information may be cast into or "written" on the piece in welding electrode in at least two places with letters not less than 1-inch high. The identification information shall be cast into all steel castings provided by the Contractor.

All "PROTECTED" spare parts and equipment shall be fitted with a plastic nametag, engraved plastic nameplate or other device acceptable to the Contracting Officer's Representative with the following information completed by the contractor:

NAME OF PART & PART NUMBER
VESSEL NAME
CONTRACT NUMBER
NAME OF EQUIPMENT OF WHICH ITEM IS A PART
DRAWING REFERENCE
MANUFACTURER
YEAR OF MANUFACTURE
OTHER IDENTIFYING INFORMATION

THIS PAGE INTENTIONALLY LEFT BLANK

PART I - THE SCHEDULE - SECTION E
INSPECTION AND ACCEPTANCE

E01 INSPECTION 2

E02 LAUNCHING 2

E03 QUALITY CONTROL AND INSPECTION 2

E04 FACILITIES FOR PERSONNEL 3

E05 TRIALS, TESTS AND DEMONSTRATIONS 4

E06 FINAL INSPECTION 28

E07 PROVISIONAL ACCEPTANCE 28

E08 FINAL ACCEPTANCE 28

E09 COMMERCIAL WARRANTY OF SUPPLIES 28

E10 RESPONSIBILITY FOR SUPPLIES 29

PART I - THE SCHEDULE - SECTION E
INSPECTION AND ACCEPTANCE

E01 INSPECTION

The contract will be managed by the Marine Design Center (MDC) of the U.S. Army Corps of Engineers (USACE) and is subject to inspection by its appointed representatives to insure strict compliance with the terms of the contract. No Government Representative, except the Contracting Officer, is authorized to change any provision of the specifications, nor shall the presence or absence of a Government Representative relieve the Contractor from any requirements of the contract.

The Contractor shall provide gas-free and oxygen level certificates for all compartments prior to permitting entrance for work or inspection. This procedure shall be reflected in the Contractor's Quality Control plans.

E02 LAUNCHING

The Contractor shall be responsible for the satisfactory launching of each vessel at the time and date selected and mutually agreed upon by the Contractor and the COR.

The Contractor shall provide a written notice to the COR 7 calendar days prior to each launching. Prior to launching, all painting below the main deck (interior and exterior) must be completed. The Contractor shall schedule 3 days between hull inspection and launch to allow any new paint on the hull interior and exterior to cure properly.

E03 QUALITY CONTROL AND INSPECTION

A. GENERAL

During the proposal phase of this procurement, the Contractor submitted a Contractor Quality Control (CQC) and Inspection Program for the work required in this contract. Full compliance with this Program is the Contractor's responsibility.

Responsible authorized personnel shall inspect the work in progress and all completed work, conduct necessary tests and record the data required. An Authorized Contractor Representative shall sign the records attesting to the validity of the information. Contractor certified inspection is an integral part of all work, therefore the COR will consider the entire contract incomplete if Contractor documentation and records signed by the Contractor's Authorized Representative are not complete.

B. SUBCONTRACTORS

Work subcontracted and/or performed away from the shipyard is covered by this inspection system. The prime Contractor cannot delegate the authority to witness or perform, and sign for tests and inspections conducted away from the shipyard, without approval of the COR.

If the subcontractor has an established Quality Control program with designated organization and personnel, the prime Contractor may designate an appropriate individual in that organization as his authorized representative. Such designation shall clearly indicate that the individual is an employee of a subcontractor and his appointment shall be subject to the approval of the COR.

C. TESTING

When any workmanship, material, or apparatus fails to pass any test or inspection, it shall be fully retested only after all known faults have been eliminated. Where directed by the COR, such failed material or apparatus shall be completely removed from the work and renewed. Any defects in workmanship or material shall be remedied by the Contractor at no additional cost to the Government, except where work was performed on material furnished by the Government.

E04 FACILITIES FOR PERSONNEL

While it is not intended that the Marine Design Center will have a Resident Engineer's Office, the Contractor shall provide office space for use by a Marine Design Center staff of two.

The space shall be convenient to the work site and consist of a desk, chair, one commercial telephone, access to the Contractor's telephone system, and one drawing table suitable for layout of drawings for study. The commercial telephone shall have speakerphone capability. The space shall be air conditioned, heated, ventilated, well maintained and well secured, and be convenient to toilet and shower facilities. The space and facilities shall be suitable for both male and female staff.

Government Representatives attending the construction may bring with them communication equipment, cameras, and various items of test equipment. The Contractor shall permit unencumbered ingress and egress to and from the shipyard and each vessel with such equipment.

Upon request, the Government representative shall have the unrestricted use of a facsimile machine, photocopier, word-processing equipment, paper, supplies, etc.

In addition, the Contractor shall furnish two parking spaces within the shipyard, in safe locations and accessible to the assigned offices.

E05 TRIALS, TESTS AND DEMONSTRATIONS

A. GENERAL REQUIREMENTS

All trials, tests and demos shall be performed on each vessel.

1. Levels of Testing

The Contractor shall perform tests on all equipment, machinery, and systems; individually, and integrated as a whole. The tests shall be performed as necessary to demonstrate satisfactory compliance with the Specification requirements contained in Section C, "DESCRIPTIONS/ SPECIFICATIONS/WORK STATEMENTS," of this Contract.

The Contractor shall perform five levels of testing as follows:

Level 1 .....Pre-Trial Tests
Level 2 .....Builder's Dock Trials
Level 3 .....Dock Trials
Level 4 .....Open Water Trials
Level 5 .....Final Acceptance Demonstrations

All demonstrations, tests, and trials shall be performed as specified herein and as specified in Contract Section C. The Contractor shall furnish all labor, materials, tools, and test equipment as necessary and perform the testing, trials, and demonstrations specified.

2. Consumables and Operating Fluids

The Contractor shall furnish all fuel oil, hydraulic oil, lubricating oil, engine anti-freeze, treatment chemicals, degreasing agents, gases, potable water and any other consumables required to perform the tests and demonstrations.

3. Test Agenda and Test Memoranda

The Contractor shall prepare an Agenda and Test Memoranda of the required tests and trials for each vessel in accordance with the requirements set forth herein. Two copies of the Agenda and Test Memoranda shall be submitted to the COR for review and approval 60 days prior to the scheduled testing (see Clause H02).

a. Test Agenda

For each vessel, the Contractor shall prepare a Test Agenda for Level 3 and 4 Tests and Trials. The Agenda shall be a complete, detailed schedule of all tests, trials and demonstrations specified in this clause. The Test Agenda shall be arranged by day, not date, and shall list the specific tests, trials, and demonstrations, and the sequence in which these will be performed.

b. Test Memoranda

For each vessel, the Contractor shall prepare Test Memoranda for all systems and equipment tested under the Levels 1, 2, 3, 4, and 5 test and trial requirements of this clause.

The test memoranda shall describe the actual test procedures, and data to be taken. The procedures shall be in accordance with the "start-up" procedures for the equipment, as delineated in the operating manuals furnished for the equipment by the manufacturer. The Contractor shall incorporate demonstrations of all applicable controls, instruments, and alarms, into each system's Builder's Dock Trials, Dock Trials, Open Water Trials, and Final Acceptance Demonstrations sections of the Test Memoranda. Data recorded in time intervals shall be tabular so that data trends can be easily recognized.

Each test memorandum shall:

(1) Reference the manufacturer's manual(s) used to format the test procedure.
(2) Describe instrumentation for each test.
(3) Include a blank space for relevant nameplate data, ambient conditions, tested parameter values for each time interval, designated values for pass/fail.
(4) Include signature blocks for Contractor Representative and Government Representative witness signatures, times, and dates.
(5) Include a space for writing comments.

The Test Memoranda shall be typed on 8-1/2 inch by 11-inch sheets of paper, single side, in three-ring notebook, with dividers for each section. Each page shall include the Marine Design Center project number (#2350, etc.) at the top.

The memoranda shall be arranged by system and equipment, with each level of testing for a specific system or piece of equipment recorded under the respective heading.

4. Test Reports

For each vessel, the Contractor shall compile the results of all tests and trials in a Test Report in accordance with the requirements set forth herein. Four levels of test reporting are required in accordance with the following schedule.

a. Within 2 days of the completion of any Pre-Trial test, a copy of the documentation of that test shall be available to the COR for review.

b. A preliminary Builder's Dock Trial Test Report shall be available to the COR for examination following the successful completion of Pre-Trial Tests (Level 1) and the Builder's Dock Trials (Level 2).

c. Following the successful completion of Dock Trials (Level 3), the Contractor shall make the Dock Trials Test Report available to the COR for review.

(1) Test Report Requirements (Levels 1, 2 and 3).

The Contractor shall make available a Test Report comprised of the results of all required Level 1, Level 2 and Level 3 tests and trials, and the results of all Vendor's tests. The Test Report shall be the filled-in version of the Test Memoranda. The test report shall be maintained current as tests and test levels progress. The test report shall be furnished in three-ring binders, with dividers for each test.

The Test Report, including the results of all Level 1 and Level 2 trials, shall be available to the COR prior to, and during, the Level 3 tests. The Test Report, including the results of all Level 1, Level 2 and Level 3 tests and trials, shall be available for review by the COR prior to and during the Level 4 trials.

The Test Report, including the results of all Level 1, Level 2, Level 3, and Level 4 tests and trials, shall be available for review by the COR prior to and during the Level 5 demonstrations.

(2) Test Report Review and Approval

The Test Report shall be reviewed and approved by both the Contractor and the COR at the conclusion of each level of testing. Review and approval of the Test Report by the Contractor and the COR is a precondition of moving to the next level of testing.

d. Within 10 calendar days following the successful completion of Acceptance Trials (Level 5), the Contractor shall submit the Acceptance Trials Test Report to the COR for review.

(1) Test Report Requirements (Level 5)

The final version of the Test Report, including results of all five levels of the tests and trials, shall be bound in three ring binders and submitted in triplicate, within 30 calendar days following successful completion of the Level 5 demonstrations, and prior to Final Payment.

5. Deficiencies

The COR will compile a list of deficiencies which will be given to the Contractor. All deficiencies shall be corrected. Final Acceptance of each vessel will be made following remedy of all deficiencies.

The successful completion of all tests, trials, demonstrations and remedied deficiencies, shall be determined by the COR.

B. PRE-TRIAL TESTS (LEVEL 1)

All trials, tests and demos shall be performed on each vessel.

The Pre-Trial tests are designed to ensure proper construction, and installation of all equipment, piping, and electrical systems, tanks, and exterior and interior bulkheads. For each vessel, pre-trial tests shall be performed during the course of construction and prior to the beginning of Builder's Dock Trials (Level 2).

The COR shall be notified at least 24 hours in advance of any such testing and may, at his discretion, send a Government representative to witness any or all tests. The Contractor shall coordinate with ABS to ensure that they are present for all tests required to be witnessed for class.

Documentation of all pre-test inspection shall be in accordance with the requirements of Section E03 (Quality Control and Inspection). All deficiencies, including cracks, leaks, grounds detected in new circuits, or poor workmanship shall be corrected prior to commencement of Builder's Trials (Level 2). Pre-trial tests shall include the following:

1. Hull

All tanks and watertight bulkheads shall be tested in accordance with ABS Rules.

2. Superstructure

All weathertight exterior bulkheads shall be hose tested for tightness prior to coating. All weathertight doors, windows, manholes, and hatches, shall be hose tested for tightness.

3. Piping Systems

a. General

The testing requirements set forth herein include system flushing procedures which shall be performed to demonstrate system cleanliness and integrity.

b. Compressed Air

Upon completion of installation, the piping of each compressed air system shall be hydrostatically tested in accordance with the ASME code. The system shall be inspected for leaks at the welds, fittings, etc. Upon completion of the hydrostatic test, the entire system shall be blown dry with air. The Contractor shall take proper precautions to protect the engine controls, whistle, water closets, and air tool stations.

c. Steering System Hydraulics

Upon completion of the installation, the system's piping and fittings shall be flushed with hydraulic fluid. Jumpers shall be provided as necessary. Flushing shall be accomplished using a Contractor furnished pump to circulate the hydraulic fluid, and the Contractor furnished filters to collect all contaminants.

d. Piping Systems

After thorough flushing, hydrostatically test all piping systems for leaks at 1-1/2 times working pressure for a period of not less than 10 minutes per test. Each system shall be inspected for leaks at the welds, fittings, hoses, etc.

e. HVAC

Blow out with compressed air all installed ductwork. Operationally test each supply and exhaust fan, along with the ducting to ensure absence of leaks, adequate support, and acceptable vibration levels.

f. Potable Water

The Contractor shall clean, chlorinate, and flush all system tanks and piping.

4. Electrical Cabling

Insulation resistance readings of all installed power and lighting cable shall be taken using a 500 volt megger, and shall be in accordance with IEEE Standard 45, Section 46. The measured cable insulation resistance must meet or exceed the minimum values outlined in the referenced IEEE publication. Also, measure the voltage drop of the longest receptacle circuit. A complete record of all readings shall be kept to assure that all circuits and equipments have been checked.

5. Exhaust Systems

Blank off and test the flanges, welds, and gaskets of each exhaust system using compressed air and soap bubbles. The main engine exhausts, and the diesel generator exhausts shall all be checked in this manner.

C. BUILDER'S DOCK TRIALS (LEVEL 2)

All trials, tests and demos shall be performed on each vessel.

Builder's Dock Trials are a preliminary "run-through" of all required Dock Tests (Level 3) by the Contractor. The intent of this testing is to provide both the Contractor and the COR reasonable assurance that all equipment and systems have been thoroughly prepared and are ready for formal testing in Dock Trials (Level 3).

For each vessel, Builder's Dock Trials shall be conducted at the Contractor's facility listed in Section B of the contract. The COR shall be notified, in writing, at least 2 working days prior to the scheduled commencement date of Builder's Trials. The Test Report must be current prior to commencing Builder's Dock Trials.

The trials shall be of sufficient scope and duration to assure that all machinery and equipment is operable and all systems are complete. The trials need not be carried out to the same degree as the Level 3 testing.

D. DOCK TRIALS (LEVEL 3)

All trials, tests and demos shall be performed on each vessel.

Dock Trials are the operability tests the Contractor must perform in the presence of the Government Representative to demonstrate the proper installation, operation, control, and performance of all equipment, machinery, and systems installed as part of this Contract. Specific dock trials and demonstrations are defined in paragraph E.

In addition, each test or demonstration shall include control, instrumentation and alarm operation as applicable.

Prior to the start of Dock Trials, all construction and installations must be complete (except for final cleaning and touch-up painting), and all Level 1 and Level 2 testing must be successfully completed and documented. The Test Report must be current through the two levels of testing and approved by the COR before Level 3 testing can proceed.

Commencement of Dock Trials shall not be sooner than one full working day after completion of Builder's Dock Trials. The COR shall be notified immediately of any condition which would delay the conduct of Dock Trials.

The COR shall be notified in writing 10 working days in advance of the date set for testing of each vessel. Results of the Level 2 Testing must be faxed to the Marine Design Center at least one day prior to the start of the Dock Trials, if Level 2 Testing was not attended by a Government Representative.

All testing and trials shall be conducted in the presence of a Government representative and any vendor representatives required by the Contract. The tests shall be conducted in accordance with the Agenda.

The Contractor shall indicate in the test memoranda which tests will be performed using the diesel generator(s) and which tests will be performed using the shore power.

During dock trials and thereafter, the atmosphere in spaces being prepared for, and preserved by, paints and tank coatings dissolved in highly volatile, toxic, and flammable solvents (29 CFR 1915.35(b)), shall be tested frequently and shall be in accordance with the U.S. Occupational Safety and health Agency Standards regulations stated in CFR 1915.31-36.

Within 24-hours of final inspection, and before any representative of the U.S. Government boards the vessel for such duties, each compartment or space to be inspected shall be certified "SAFE FOR WORKERS" by the National Fire Protection Associations (NFPA) certified Marine Chemist. This means that in the compartment or space so designated:

a. The oxygen content of the atmosphere is at least 19.5 percent and below 22 percent by volume;
b. The concentration of flammable vapors is below 10 percent of the lower explosive limit (LEL);
c. Toxic materials in the atmosphere are within permissible concentrations;
d. Any residues or materials associated with any work in the space shall not produce uncontrolled release of toxic materials under existing atmospheric conditions while maintained as directed on the Marine Chemist's certificate.

The Contractor shall notify the Government when this certificate has been issued. A vessel will not be inspected and accepted by the Government without an NFPA Marine Chemist certificate for each hull compartment designated "SAFE FOR WORKERS."

The success of all tests and the existence of any deficiencies shall be determined by the COR. Deficiencies shall be remedied prior to start of the Open Water Trials (Level 4).

E. SPECIFIC DOCK TRIALS AND DEMONSTRATIONS (LEVEL 3)

All trials, tests and demos shall be performed on each vessel.

1 INCLINING TEST

The inclining test shall be carried out in accordance with ASTM F 1321-90. For each vessel, the Contractor shall provide an inclining report in accordance with this criteria which gives the "as inclined" and "lightship" load condition displacements and CG locations. The report shall be included as part of the Test Memoranda.

2 WINDOW & DOOR TIGHTNESS

Using a hose, demonstrate weather tightness of all windows and doors.

3 MAIN ENGINES

For each main engine, demonstrate the following in the presence of an authorized manufacturer's representative:

- Cold starting. The cold starting testing shall demonstrate the minimum number of starts required by ABS for each engine.
- Starting and stopping of each engine from its local panel and its pilothouse panel.
- Emergency stop from the pilothouse console. Resetting at the local engine panel.
- Automatic shutdown for engine overspeed.
- Engine alarms at its local panel and at the pilothouse console. Ensure the proper operation of all alarm test circuits for each main engine.
- Operation of engine jacket water heaters.
- Engage reduction gear.

4 DIESEL GENERATOR SETS

For each diesel generator set, demonstrate the following in the presence of an authorized manufacturer's representative:

- Cold starting.
- Starting and stopping of each generator set from its local panel. Starting and stopping of each generator set from the pilothouse.
- Alarms at its local panel. Ensure the proper operation of all alarm test circuits.
- Automatic shutdown for engine overspeed.
- Operation of the generator heaters.

5 LOAD BANK TESTING

Each diesel generator set shall be load bank tested. Operate each generator set at 1/4, 1/2, 3/4 and full loads in 15 minute intervals, and then at 110% rated load (with the use of a load bank) for a minimum of 2 hours until the jacket water and exhaust temperatures stabilize. All engine and generator parameters shall be recorded at 5-minute intervals for the partial and full load periods, and at 15-minute intervals for the 110% load period.

6 ENGINE COOLING SYSTEM

Demonstrate that proper cooling water flow takes place during the operation of the main engines and diesel generators. Inspect the system for leaks.

7 ENGINE EXHAUST SYSTEM

Demonstrate the operation of each main engine and diesel generator exhaust system. Inspect each system for leaks and verify the backpressure on each system.

8 STEERING SYSTEM

Before leaving the dock for Open Water Trials, demonstrate the operation of the steering rudders and flanking rudders from hard over to port to hard over to starboard, and intermediate positions to simulate normal operation.

Demonstrate the operation of the rudder angle indicators.

Demonstrate the emergency operation of the non-follow up/jog lever for the steering rudders. Demonstrate the emergency operation of the non-follow up/jog lever for the flanking rudders.

Demonstrate the operation of both hydraulic pumps.

Demonstrate the operation of the visual and audible alarms for loss of hydraulic pressure or low oil level in the reservoir.

9 FUEL OIL SYSTEM

Ensure proper flow to the main engines and the diesel generators during operation. Demonstrate the operation of all remote operated shut-off valves.

10 BILGE SYSTEM

Demonstrate the operation of the bilge system by using the bilge pump to suction bilge water from each compartment, and then discharge the water overboard. Record the pump discharge pressure for the pump. Align the fire pump for bilge service and demonstrate the fire pump's ability to take suction from the farthest bilge suction.

11 SHAFT (POOCH) SEAL SUMP PUMPS

Demonstrate the operation of the shaft (pooch) seal sump pumps to discharge water overboard.

12 POTABLE WATER

Demonstrate that there is adequate flow of hot and cold water from each respective fixture (sinks, shower, water closets, water cooler, and hose bibb).

Allow the flow to continue from an outlet until the potable water pump starts and note the "cut-in" pressure. Ascertain that the pump shuts off when the pressure reaches the "cut-off" pressure. Measure the chlorine level in the potable water tank using a standard test kit.

Demonstrate the operation of the liquid level gauge for the potable water tank.

13 SANITARY & SEWAGE SYSTEM

Flush each head several times to demonstrate the operability of the system. Demonstrate operation of the marine sanitation device and automatic sump/pump.

Demonstrate the operation of each gray water drain from the galley sink, lavatories, and showers. Demonstrate the operation of the three-way valves to direct flow to the sanitary holding tank or overboard.

Demonstrate the operation of the sanitary holding tank liquid level gauge.

14 DRAINAGE SYSTEM

For the weather deck drains, demonstrate the operation of all scupper drains to drain water from their respective decks.

15 FIREMAIN AND FIRE PUMP

Demonstrate the starting capability of the fire pump from the local station and all remote stations.

Demonstrate the operation of the indicators for the fire pump suction and discharge valves.

16 FIXED FIRE EXTINGUISHING (CO_2) SYSTEM

Demonstrate the proper operation of the CO_2 system. Demonstrate the operation of the audible alarms and the automatic shutdown of the ventilation system fans. (These tests may be done concurrently with the required ABS tests on this system. A Government representative must be present to witness the tests).

17 FIRE DETECTION & ALARM SYSTEM

Demonstrate the operation of the fire detection system. The testing and trials shall demonstrate:

- The activation of the alarms from each smoke detector and heat sensor.
- The automatic shutdown of the HVAC System and any ventilation fans serving the main deckhouse.
- The operation of the red indicating light on the pilothouse top.
- Operation of the system battery charger.

A representative of the alarm system shall be present during the tests and trials of the detection and alarm system.

18 HVAC

A HEAT PUMP - HEATING AND COOLING

Demonstrate the satisfactory operation of each heat pump to cool, heat, and admit outside ventilation air to its respective zone. Measure and record the temperatures at each air register during the heating and cooling modes. Measure and record the cfm at each register. Demonstrate the operation of the temperature controls and fan control for each zone. Ensure that the smoke sensors/heat sensors activate the system's controls to shut down the system in case of fire.

Demonstrate the operation of each electric resistance heater located in each supply duct leading from each heat pump. Demonstrate the operation of each manually adjustable damper at each duct outlet.

A representative of the air conditioning and heating system supplier shall be present during the tests and trials of the system.

B SPACE VENTILATION

Demonstrate the satisfactory operation of the supply and exhaust fans for the lower and upper engine rooms.

Record the air velocities at each fan and duct discharge, and calculate the cfm.

Demonstrate the operation of the galley/mess vent hood and each head compartment ventilation fan. Measure and record the cfm for each fan.

Demonstrate the operation of the supply fans for the galley/mess area and the crew quarters.

Demonstrate the operation of the exhaust fan for the workshop.

C SPACE HEATING

Demonstrate the operation of the electric resistance heaters in the:

- Lower and upper engine rooms
- Tank space
- Head spaces
- Workshop

19 COMPRESSED AIR SYSTEM

Demonstrate the charging of the air receiver from atmospheric to the system design pressure. Record the amount of time to charge the receiver.

Demonstrate the lead-lag ability of each compressor. Demonstrate that the lag compressor will cut-in at 20 psig lower than the lead compressor. Demonstrate that both compressors will cut-out at 175 psig.

Demonstrate airflow to all air tool stations and the water closets.

Demonstrate the operation of the air horn.

Verify correct operation of the desiccant air dryer.

Demonstrate the operability of all relief valves and receiver drain valves.

Using the compressed air system, demonstrate the blowdown of the sea chests.

20 ALARM SYSTEMS

Demonstrate the operation of each alarm system:

- General Alarm System
- Bilge Alarm System

Each station of an alarm system shall be tested for operation showing the activation and silencing of the visual and audible alarms of the system.

Demonstrate the operation of the pilothouse top indicating lights for the Bilge Alarm System.

Demonstrate the operation of the battery charger for the General Alarm System.

21 WINCHES & CAPSTANS

Operate the deck winches in both directions under power. Demonstrate the operation of the selector switch and operation from the deck stations and the pilothouse stations.

Operate the capstan(s) in both directions under power. Demonstrate the operation of the switch.

22 ROLLER BUTTONS

Demonstrate the operation of the roller buttons.

23 MISCELLANEOUS EQUIPMENT

Demonstrate the operation of the galley/mess equipment:

- Refrigerators/freezers
- Electric range (oven and stove top)
- Griddle
- Ice maker
- Coffee maker
- Microwaves

24 PILOTHOUSE WINDOW WIPERS & FANS

Demonstrate the operation of the windshield wipers and pilothouse fans.

25 COMMUNICATION EQUIPMENT

A Public Address/Loud Hailer System - Demonstrate the operation of the public address/loud hailer system. Demonstrate the talkback feature of the system. Demonstrate the automatic foghorn operation of the system.

B Interior Communications - Demonstrate the two-way intercom system from all stations.

26 AC ELECTRICAL SYSTEM

A General - In order to demonstrate the operation of the electrical system as integrated system, the Contractor shall perform approximately ½ of the Level 3 machinery tests using the diesel generators. The remaining ½ of the Level 3 machinery tests shall performed using shore power supplied through the vessel's shore power receptacle. It is the Contractor's option as to which tests shall be powered from shore power and which tests shall be powered by the diesel generators.

B Switchgear - Demonstrate the operation of all circuit breakers and all equipment in the main switchboard. For the two generator breakers, the shore power breaker, and the off-vessel breaker, safely demonstrate all mechanical and electrical interlocks.

C Switchboard - Demonstrate all features of the switchboard such as the voltmeters and selector switches, ammeters and selector switches, frequency meters and selector switches, power available indicator lights, space heaters, ground detection lights and test switches, and ground ammeter and test switch. Demonstrate the operation of the phase sequence/loss system.

D Distribution Panels - Demonstrate the operation of all circuit breakers in the distribution panel boards.

27 DC ELECTRICAL SYSTEM

A General - Verify the operation of the batteries and battery chargers before and after starting the diesel generators.

B Distribution Panel - Demonstrate the operation of all circuit breakers in the DC panels.

C Demonstrate the operation of the battery selector switches. Verify the proper operation of the 24/12-volt DC converters.

28 LIGHTING

A Lighting - Demonstrate the operation of all interior lights, exterior lights, and floodlights. Demonstrate the operation of all lighting switches.

B Emergency Lighting - Demonstrate the operation of all emergency lights, including the manual override switch to turn the emergency lights on or off.

C Console Control Lighting - Demonstrate the operation of all the lights for all gauges and instrumentation installed in the pilothouse console. Demonstrate the operation of the dimmer switches for the lights.

D Navigation Lights - Demonstrate the operation of all navigation lights. Demonstrate the operation of all circuit breakers and "bulb-out" alarms in the navigation lighting panel.

E Searchlights - Demonstrate the operation of the Xenon searchlights. Demonstrate the operation of the flanking lights. Demonstrate all searchlight controls.

29 RECEPTACLES

A Convenience Receptacles - Demonstrate the operability of all convenience receptacles by using 80% load for each receptacle. Check the receptacles for polarity. For GFCI types, demonstrate their ability to reset.

B Shore Power Receptacle - Demonstrate the operation of the shore power receptacle to supply power to the vessel.

C Off-Vessel Receptacle - Demonstrate the operation of the off-vessel receptacle to supply power overboard by using a load bank.

30 NOISE SURVEY

The survey will entail the taking of sufficient noise measurements in each of the vessel spaces to determine noise levels. A report shall be prepared containing the survey results.

The Contractor shall perform the survey using a subcontractor especially qualified for this work either by training or experience. The Contractor shall identify the proposed subcontractor in the Subcontracting Plan and include the subcontractor's qualifications.

The survey shall be conducted for each of the following conditions with all ventilation equipment and systems in full operation:

- Both main propulsion engines at full speed, and one generator operating at normal bus load.
- Both main propulsion engines off, and one generator running.

The sound levels reported for each compartment shall be based on the average of the broadband A-weighted sound pressure levels taken at various representative locations of the reverberant field of the compartment or space in question. These measurements shall typically be taken at locations within a space where operating personnel are expected to spend a majority of their time. Measurements shall be taken in accordance with NVIC 12-82.

A report shall be prepared by the Contractor detailing the test results. The report shall include:

- A tabulation of the actual raw data taken during the survey for noise.
- Sketches of the spaces measured with the recorded sound levels denoted at the location of their measurement. Reduced size general arrangement drawings will be acceptable for this purpose.

The Contractor shall take corrective action as necessary to achieve the required criteria. The report shall describe any compartments which present a noise hazard according to OSHA regulation, 29 CFR 1910.95 "Occupational Noise Exposure."

F. OPEN WATER TRIALS (LEVEL 4)

All trials, tests and demos shall be performed on each vessel.

1 GENERAL

After all items on the schedule of Dock Tests (Level 3) have been satisfactorily completed and any deficiencies corrected to the satisfaction of the COR, the Contractor shall commence a program of Open Water Trials.

The Contractor's personnel shall operate the vessel and shall make all observations and record all data. The Contractor shall provide appropriately licensed personnel as may be required by the USCG for conduct of trials. The Contractor shall coordinate with ABS to assure that all trials required to be witnessed for class are witnessed.

Commencement of Open Water Trials shall not be sooner than one full working day after completion of Dock Tests.

The COR shall be notified immediately of any condition which would delay the conduct of the Open Water Trials.

The COR shall be notified in writing 10 working days in advance of the date set for the trials.

All testing and trials shall be conducted in the presence of a Government representative and any vendor representatives required by the contract. The trials shall follow the agenda prepared under paragraph A.3 (a).

2 TRIAL LOCATION

The site of the trials shall be such that accurately placed targets can be readily observed for the purpose of computing speeds. The site of the trials shall also be free from fog and traffic, with a depth of water of at least 20 feet. The Contractor shall take the vessel to the nearest mile range that will provide the required minimum depth and permit operation of the vessel at full speed.

3 TRIAL CONDITIONS

Each vessel shall be complete and ready for trials, with a six to eight person trial crew aboard, with tools and miscellaneous equipment.

The trial conditions are:

- Fuel oil at 5600 gallons and ballast as necessary for a draft of 8'-0", with approximately 6 to 9 inches of aft trim
- Full (100%) lube oil
- Full (100%) transmission oil
- Full (100%) hydraulic oil
- Full (100%) potable water tank
- Empty sanitary holding tank
- Empty oily water tank
- Empty waste oil tank

Before trials, record all fuel tank soundings, record level of the potable water tank, and record tank levels for the lube oil tank, transmission oil tank, and hydraulic oil tank. Ensure that sanitary holding tank, oily water tank, and the waste oil tank are empty.

Record drafts at the draft marks and read the hull freeboards at the four corners. These draft readings shall be used to calculate the displacements and LCG. Compare these values to the updated final weight estimate.

After trials are completed, again read the drafts and take the freeboards as a double check on the trial displacement and trim. Record fuel tank soundings, record level of potable water tanks, and record tank levels for the lube oil tank, transmission oil tank, and hydraulic oil tank. Calculate the fuel (volume) consumed during the trial period.

4 GENERAL TRIAL DATA

The following general data shall be furnished by the Contractor. This data shall be recorded at the location of the runs:

- Location of trial course and direction of runs
- Depth of water
- Density of the water
- Wind velocity, temperature and direction relative to the course
- Displacement of vessel at beginning of trials
- Draft readings of the vessel fore and aft

- Freeboard forward and aft
- Fuel consumption for each pair of runs (Volume of fuel)
- Total number/weight of people on board
- Ballast carried (if any)
- Propeller diameter, pitch and style

5 SPEED TRIALS

Speed trials are to be run over a measured distance in both directions to determine the speed of the vessel. The vessel shall be run at 600 rpm, 900 rpm, 1200 rpm, or maximum engine rpm as permitted by the bow wash.

The trial course selected shall be laid out over a depth in excess of 20 feet of water. Two runs over the course shall be made at each of the engine speeds, reversing the direction after each trial run.

The following performance data shall be recorded for each engine at the start and finish of each run:

- Engine jacket water temperature
- Lube oil pressure
- Lube oil temperature
- Transmission oil pressure
- Transmission oil temperature
- Engine exhaust temperature
- Shaft tachometer
- Engine tachometer
- Engine compartment temperature (hatches closed)
- Time over the course for each run

The engine and transmission gauges and instrumentation shall be read at the local panels in the engine room and at the pilothouse panel.

6 ENGINE PERFORMANCE TEST

A PAR Test shall be performed for the main engines. The fuel rate of the main engines shall be compared to the original factory performance specifications during the vessel's test and trials. This comparison shall be made for the entire operating range of the engines by the engine manufacturer's representatives using instrumentation to acquire real-time fuel rate and engine output.

7 BOLLARD TEST

A. Head Against a Pier

The vessel headlog shall be put against a pier, bulkhead or a mooring dolphin, and the engine RPM gradually increased to full speed ahead. Record that RPM and hold that RPM until the engine temperature increases to 20 degrees above the normal operating temperature or 20 minutes whichever comes first.

The bollard rpm shall be checked against the predicted rpm to verify the propeller design point. Corrective action shall be taken if the actual rpm varies by more than plus or minus 10 rpm from predicted bollard. In no case shall the bollard rpm be less than 92% of the design rpm.

During the testing, note any excess vibration and record gauge readings of the main engines every five minutes on the test forms.

B. Thrust Measurement

The bollard thrust in deep water (more than 20 feet) of the vessel at full continuous power is to be measured and recorded, for both ahead and astern pull. The bollard measurement shall be made with the vessel in open water, using a tether secured to a suitably sized bollard or similar device. The bollard thrust shall be measured through use of a certified dynamometer, with a remote read out. If the dynamometer is installed in a wire rope line, the dynamometer shall be fitted with a swivel device to eliminate torque on the dynamometer. The Contractor shall provide an auxiliary boat for the duration of the bollard test, to maintain the heading of the vessel against current or wind.

8 MANEUVERABILITY TRIALS

During main engine testing in the ahead direction, operate the steering rudders from hard over to port to hard over to starboard, and intermediate positions to simulate normal operation. Note time to turn rudders to hard over and vessel time to turn 90 degrees from the original heading.

During main engine testing in the astern direction, operate the flanking rudders in a similar manner and record data as before.

Going full rpm ahead, demonstrate and record times for:

- Operating the steering rudders and flanking rudders from 0 degrees to 45 degrees port, and from 45 degrees port back to 0 degrees.

- Operating the steering rudders and flanking rudders from 0 degrees to 45 degrees starboard, and from 45 degrees starboard back to 0 degrees.

Going full rpm astern, demonstrate and record times for:

- Operating the steering rudders and flanking rudders from 0 degrees to 45 degrees port, and from 45 degrees port back to 0 degrees
- Operating the steering rudders and flanking rudders from 0 degrees to 45 degrees starboard, and from 45 degrees starboard back to 0 degrees

With the vessel running at 900 rpm, 1200 rpm, and the highest rpm allowed by the bow wash, put the steering rudders hard over to starboard and continue the turn until the vessel reaches its initial heading (360 degree turn). Estimate the turning circle diameter from the propeller and hull wake. Note the time required.

Repeat this maneuver by turning to port and again note the turning diameter and time.

Demonstrate the emergency operation of the non-follow up/jog lever for the steering rudders. Demonstrate the emergency operation of the non-follow up/jog lever for the flanking rudders. The emergency operation of the system shall be performed making 360-degree turn in each direction and while making a series of S-curves.

9 CRASH STOP

The vessel shall be brought from full speed and rpm ahead to full rpm astern in the water as quickly as possible (without damaging the reverse gears or engines). Record the distance the vessel travels, and the time from full speed and rpm ahead to full rpm astern in the water.

10 TOWING TRIALS

The vessel shall be tested for a period of not less than two hours pushing ahead barge(s) at a maximum engine RPM without overloading the engines.

- The vessel shall push two deck cargo barges that are approximately 150 feet x 35 feet (at a 2 foot draft) during the towing trials.

The Contractor may use other barge sizes as long as equivalent resistance is provided. The equivalent resistance shall be verified and documented by use of the Howe Equation.

For the towing trials, record data as for speed trials.

During this time steering and maneuvering shall be demonstrated while pushing the barge(s).

11 COMMUNICATION EQUIPMENT

During the Open Water Trials, operation of the following communication equipment shall be demonstrated:

A Public Address/Loud Hailer System - During trials, demonstrate the operation of the public address/loud hailer system.

B VHF Radios - Demonstrate the operation of the two VHF marine radios.

C District Radio - Demonstrate the operation of the District radio.

12 NAVIGATION EQUIPMENT

During the Open Water Trials, operation of the following navigation equipment shall be demonstrated:

A Radar - Verify the accuracy and demonstrate the operation of the radar.

B Depth Sounder - During the trials, verify the accuracy and demonstrate the operation of the depth sounder.

C Swing Meter - Demonstrate the operation of the swing meter.

G. FINAL ACCEPTANCE DEMONSTRATIONS (LEVEL 5)

Final Acceptance Demonstrations are tests the Contractor must perform following delivery at the destination of each vessel to demonstrate to the operating staff the proper operation, and performance of all the equipment, machinery, and electrical systems functioning as an "integrated whole" as described herein.

Final Acceptance Demonstrations shall be conducted following successful completion of Level 3 tests, correction of all deficiencies and delivery of the vessel to the designated delivery point. Final Acceptance Demonstrations must be performed in the presence of a Representative of the Contracting Officer.

The contractor shall provide sufficient personnel and resources to operate all of the equipment and demonstrate its proper installation.

H. DOCUMENTATION

The Contractor shall prepare a Schedule for all levels of testing. The Schedule shall be a complete, detailed listing of all the tests, trials and demonstrations required by this contract. The Schedule shall be arranged by day, not date, and shall list the specific tests, trials and demonstrations and the sequence in which they will be performed.

The Contractor shall prepare Test Data Sheets for all equipment and systems required to be tested or demonstrated under this contract, for each vessel. The Data Sheets shall contain the information required by Clause E03, "Quality Assurance and Control" as well as the procedures of each test, the results of each tested function, nameplate data of equipment tested, and the designated areas for "Pass/fail," witness' signatures, dates and comments.

The Contractor shall incorporate demonstrations of all applicable controls, instruments, and alarms, into each system's Builder's Trials, Dock and River Tests, and Final Acceptance Demonstrations sections of the Test Data Sheets. Data recorded in time intervals shall be tabular so that data trends can by easily recognized.

The Test Data Sheets shall be typed, single sided, on 8-1/2 inch x 11 inch sheets of paper.

The Contractor shall provide a Test Report, for each vessel, comprised of the results of all required tests, trials and demonstrations performed, and all deficiencies noted. The Test Report shall be the filled in version of the Test Data Sheets and shall be available to the COR at all times throughout the construction of each vessel.

The Data Sheets shall be organized into a comprehensive Test Report and arranged by system and level of testing similar to the following outline:

X. System (or equipment)
- a. Pre-Trial Tests
- b. Builder's Trials
- c. Dock and River Tests
- d. Final Acceptance Demonstrations

The Test Report shall be reviewed and approved by both the Contractor and the COR at the conclusion of each level of testing. Review and approval of the Test Report by the Contractor and the COR is a precondition of moving to the next level of testing.

The final version of the Test Report, including the reports of the Regulatory Bodies and the Regulatory Body Certificates, shall be bound in a durable hard cover and submitted to the COR in duplicate prior to Final Payment.

E06 FINAL INSPECTION

When all work and testing has been satisfactorily completed at the builders yard, the Contractor and a Government Representative shall make a complete physical inspection and inventory of each vessel. A "punch list" of deficiencies will be developed and presented to the Contractor for corrective action.

All corrective action necessary to eliminate the "punch list" deficiencies shall be completed at the Contractor's facility. The Contractor shall give the COR 7 working days notice prior to the desired date of reinspection.

Prior to any inspection or reinspection the vessel and all their equipment shall be thoroughly cleaned and all painting and finishes put in first class condition.

E07 PROVISIONAL ACCEPTANCE

Following satisfactory completion of all tests and trials, correction of all "punch list" deficiencies, and receipt of all contract deliverables, each vessel will be Provisionally Accepted at the builder's yard. Delivery of each vessel may not be started until Provisional Acceptance of the vessel has been made.

E08 FINAL ACCEPTANCE

Final Acceptance will be made upon delivery of each vessel, afloat and "Ready for Service" at the delivery point designated and following successful completion of the Final Acceptance Demonstrations. "Ready for Service" is defined as clean inside and out; all trash, dunnage, lashing, and delivery related material disposed of; loose items of outfit in place; all electrical and mechanical systems operational; equipment properly adjusted; instruments and electronics calibrated or aligned, fuel and water tanks filled and damaged paint touched up.

Each vessel will be subject to a complete inspection at the time of delivery.

The Contractor shall provide necessary personnel, equipment and materials to make the vessel "Ready for Service."

E09 COMMERCIAL WARRANTY OF SUPPLIES

For each vessel, the Contractor shall assign, in writing, all commercial warranties for

equipment provided under this contract to the Government. The effective date of all commercial warranties shall be the date of Final Acceptance for that vessel.

E10 RESPONSIBILITY FOR SUPPLIES

The following, clause 52.246-16, "Responsibility for Supplies" (Apr 1984), is incorporated by full test.

52.246-16 RESPONSIBILITY FOR SUPPLIES (APR 1984)

(a) Title to supplies furnished under this contract shall pass to the Government upon formal acceptance, regardless of when or where the Government takes physical possession, unless the contract specifically provides for earlier passage of title.

(b) Unless the contract specifically provides otherwise, risk of loss of or damage to supplies shall remain with the Contractor until, and shall pass to the Government upon--

(1) Delivery of the supplies to a carrier, if transportation is f.o.b. origin; or

(2) Acceptance by the Government or delivery of the supplies to the Government at the destination specified in the contract, whichever is later, if transportation is f.o.b. destination.

(c) Paragraph (b) of this section shall not apply to supplies that so fail to conform to contract requirements as to give a right of rejection. The risk of loss of or damage to such nonconforming supplies remains with the Contractor until cure or acceptance. After cure or acceptance, paragraph (b) of this section shall apply.

(d) Under paragraph (b) of this section, the Contractor shall not be liable for loss of or damage to supplies caused by the negligence of officers, agents, or employees of the Government acting within the scope of their employment.

(End of clause)

THIS PAGE INTENTIONALLY LEFT BLANK

PART I - THE SCHEDULE - SECTION F
DELIVERY OR PERFORMANCE

TABLE OF CONTENTS

CLAUSE		PAGE
F01	PERFORMANCE	2
F02	PLACE OF DELIVERY	6
F03	NOT USED	6
F04	LIQUIDATED DAMAGES - SUPPLIES, SERVICES, OR RESEARCH AND DEVELOPMENT	7
F05	DELIVERY OF EXCESS QUANTITIES, STOP WORK ORDER & FOB DESTINATION CLAUSES	7

PART I - THE SCHEDULE - SECTION F
DELIVERIES OR PERFORMANCE

F01 PERFORMANCE

TIME OF DELIVERY

(a) The Government requires delivery to be made according to the following schedule:

REQUIRED DELIVERY SCHEDULE

ITEM NUMBER	DESCRIPTION	QUANTITY	WITHIN DAYS AFTER DATE OF NOTICE TO PROCEED
0001AA	PLANNING	1 job	30 Calendar days
0001AB	ENGINEERING AND SCHEDULING	1 job	180 calendar days
0001AC	CONSTRUCT, TEST AND DELIVER	1 job	330 calendar days
0002AA	PLANNING	1 job	60 Calendar days
0002AB	ENGINEERING AND SCHEDULING	1 job	210 calendar days
0002AC	CONSTRUCT, TEST AND DELIVER	1 job	360 calendar days

Option Items:

ITEM NUMBER	DESCRIPTION	QUANTITY	WITHIN DAYS AFTER DATE OF NOTICE TO PROCEED
0003AB	ENGINEERING AND SCHEDULING	1 job	90 calendar days
0003AC	CONSTRUCT, TEST AND DELIVER	1 job	360 calendar days
0004AB	ENGINEERING AND SCHEDULING	1 job	90 calendar days
0004AC	CONSTRUCT, TEST AND DELIVER	1 job	360 calendar days

If the Government exercises the optional line items, it is our intention to award one option item within 180 days of award of the base contract, and to award the remaining option item within 270 days of award of the base contract.

The Notice To Proceed for the first option item awarded will be issued at least 30 days after completion of CLIN 0002AB, "Engineering and Scheduling." The Notice To Proceed for the second option item, if awarded, will be issued at least 30 days after completion of the, "Engineering and Scheduling" phase of the first option item.

The Government will evaluate equally, as regards time of delivery, offers that propose delivery of each quantity within the applicable delivery period specified above. Offers that propose delivery that will not clearly fall within the applicable required delivery period specified above, will be considered nonresponsive and rejected. The Government reserves the right to award under either the required delivery schedule or a proposed delivery schedule, if it is an earlier delivery schedule than required above. If the offeror proposes no other delivery schedule, the required delivery schedule above will apply.

OFFEROR'S PROPOSED DELIVERY SCHEDULE

ITEM NUMBER	DESCRIPTION	QUANTITY	WITHIN DAYS AFTER DATE OF NOTICE TO PROCEED
0001AA	PLANNING	1 job	
0001AB	ENGINEERING AND SCHEDULING	1 job	
0001AC	CONSTRUCT, TEST AND DELIVER	1 job	
0002AA	PLANNING	1 job	
0002AB	ENGINEERING AND SCHEDULING	1 job	
0002AC	CONSTRUCT, TEST AND DELIVER	1 job	
0003AB	ENGINEERING AND SCHEDULING	1 job	
0003AC	CONSTRUCT, TEST AND DELIVER	1 job	
0004AB	ENGINEERING AND SCHEDULING	1 job	
0004AC	CONSTRUCT, TEST AND DELIVER	1 job	

(b) Attention is directed to the Contract Award provision of the solicitation that provides that a written award or acceptance of offer mailed, or otherwise furnished to the successful offeror, results in a binding contract. The Government will mail or otherwise furnish to the offeror an award or notice of award not later than the day award is dated. Therefore, the offeror should compute the time available for performance beginning with the actual date of Notice To Proceed rather than the date the written notice is received from the Contracting Officer through the ordinary mails. However, the Government will evaluate an offer that proposes delivery based on the Contractor's date of receipt of the contract or notice of award by adding five days for delivery of the award through the ordinary mails. If, as so computed, the offered delivery date is later than the required delivery date, the offer will be considered nonresponsive and rejected.

For the purposes of estimating the phase completion and contract completion dates, the Contractor should take into account the time required to review the Contractor's submittals and the time between phases required to issue a Notice To Proceed. Refer to Clause H01 for additional explanation.

F02 PLACE OF DELIVERY

The Contractor shall deliver the vessels afloat and ready for service at the following locations:

CLIN 0001:

U.S. Army Corps of Engineers
U.S. Army Engineer District, Pittsburgh
Pittsburgh District Service Base
Mile 7.5 Ohio River
Neville Island, Pennsylvania

CLIN 0002:

U.S. Army Corps of Engineers
U.S. Army Engineer District, Huntington
Marietta Repair Station
Mile 172.0 Ohio River
Marietta, Ohio

CLIN 0003:

U.S. Army Corps of Engineers
U.S. Army Engineer District, St. Paul
Fountain City Service Base
Mile 733.7 Upper Mississippi River
Fountain City, Wisconsin

CLIN 0004:

U.S. Army Corps of Engineers
U.S. Army Engineer District, Rock Island
Mile 493.0 Mississippi River
L & D #14
Pleasant Valley, Iowa

F03 NOT USED

F04 LIQUIDATED DAMAGES - SUPPLIES, SERVICES, OR RESEARCH AND DEVELOPMENT

(a) If the Contractor fails to deliver the supplies or perform the services within the time specified in this contract, or any extension, the Contractor shall, in place of actual damages, pay to the Government as fixed, agreed, and liquidated damages, for each calendar day of delay the sum of:

For Line Item 0001AA, 0002AA, 0003AA, 0004AA; .....$ 0.00
For Line Item 0001AB, 0002AB, 0003AB, 0004AB; .....$ 550.00
For Line Item 0001AC, 0002AC, 0003AC, 0004AC; .....$ 925.00

(b) Alternatively, if delivery or performance is so delayed, the Government may terminate this contract in whole or in part under the Termination for Default - Fixed Price, Supply and Services clause in this contract and in that event, the Contractor shall be liable for fixed, agreed, and liquidated damages accruing until the time the Government may reasonably obtain delivery or performance of similar supplies or services. The liquidated damages shall be in addition to excess costs under the Termination clause.

(c) The Contractor shall not be charged with liquidated damages when the delay in delivery or performance arises out of causes beyond the control and without the fault or negligence of the Contractor as defined in the Termination for Default - Fixed Price, Supply and Services clause of this contract.

F05 DELIVERY OF EXCESS QUANTITIES, STOP WORK ORDER & FOB DESTINATION CLAUSES

The following, clauses [52.211-17 - Delivery of Excess Quantities (Sep 1989), 52.242-15 - Stop Work Order (Aug 1989) and 52.247-34 - F.O.B. DESTINATION (Nov 1991)] are incorporated by full test.

52.211-17 DELIVERY OF EXCESS QUANTITIES (SEP 1989)

The Contractor is responsible for the delivery of each item quantity within allowable variations, if any. If the Contractor delivers and the Government receives quantities of any item in excess of the quantity called for (after considering any allowable variation in quantity), such excess quantities will be treated as being delivered for the convenience of the Contractor. The Government may retain such excess quantities up to $250 in value without compensating the Contractor therefor, and the Contractor waives all right, title, or interests therein. Quantities in excess of $250 will, at the option of the Government, either be returned at the Contractor's expense or retained and paid for by the Government at the contract unit price.
(End of clause)

52.242-15 STOP-WORK ORDER (AUG 1989)

(a) The Contracting Officer may, at any time, by written order to the Contractor, require the Contractor to stop all, or any part, of the work called for by this contract for a period of 90 days after the order is delivered to the Contractor, and for any further period to which the parties may agree. The order shall be specifically identified as a stop-work order issued under this clause. Upon receipt of the order, the Contractor shall immediately comply with its terms and take all reasonable steps to minimize the incurrence of costs allocable to the work covered by the order during the period of work stoppage. Within a period of 90 days after a stop-work is delivered to the Contractor, or within any extension of that period to which the parties shall have agreed, the Contracting Officer shall either--

(1) Cancel the stop-work order; or

(2) Terminate the work covered by the order as provided in the Default, or the Termination for Convenience of the Government, clause of this contract.

(b) If a stop-work order issued under this clause is canceled or the period of the order or any extension thereof expires, the Contractor shall resume work. The Contracting Officer shall make an equitable adjustment in the delivery schedule or contract price, or both, and the contract shall be modified, in writing, accordingly, if--

(1) The stop-work order results in an increase in the time required for, or in the Contractor's cost properly allocable to, the performance of any part of this contract; and

(2) The Contractor asserts its right to the adjustment within 30 days after the end of the period of work stoppage; provided, that, if the Contracting Officer decides the facts justify the action, the Contracting Officer may receive and act upon the claim submitted at any time before final payment under this contract.

(c) If a stop-work order is not canceled and the work covered by the order is terminated for the convenience of the Government, the Contracting Officer shall allow reasonable costs resulting from the stop-work order in arriving at the termination settlement.

(d) If a stop-work order is not canceled and the work covered by the order is terminated for default, the Contracting Officer shall allow, by equitable adjustment or otherwise, reasonable costs resulting from the stop-work order.
(End of clause)

52.247-34 F.O.B. DESTINATION (NOV 1991)

(a) The term "f.o.b. destination," as used in this clause, means--

(1) Free of expense to the Government, on board the carrier's conveyance, at a specified delivery point where the consignee's facility (plant, warehouse, store, lot, or other location to which shipment can be made) is located; and

(2) Supplies shall be delivered to the destination consignee's wharf (if destination is a port city and supplies are for export), warehouse unloading platform, or receiving dock, at the expense of the Contractor. The Government shall not be liable for any delivery, storage, demurrage, accessorial, or other charges involved before the actual delivery (or "constructive placement" as defined in carrier tariffs) of the supplies to the destination, unless such charges are caused by an act or order of the Government acting in its contractual capacity. If rail carrier is used, supplies shall be delivered to the specified unloading platform of the consignee. If motor carrier (including "piggyback") is used, supplies shall be delivered to truck tailgate at the unloading platform of the consignee, except when the supplies delivered meet the requirements of Item 568 of the National Motor Freight Classification for "heavy or bulky freight." When supplies meeting the requirements of the referenced Item 568 are delivered, unloading (including movement to the tailgate) shall be performed by the consignee, with assistance from the truck driver, if requested. If the contractor uses rail carrier or freight forwarded for less than carload shipments, the contractor shall ensure that the carrier will furnish tailgate delivery, when required, if transfer to truck is required to complete delivery to consignee.

(b) The Contractor shall--

(1) (i) Pack and mark the shipment to comply with contract specifications; or
(ii) In the absence of specifications, prepare the shipment in conformance with carrier requirements;

(2) Prepare and distribute commercial bills of lading;

(3) Deliver the shipment in good order and condition to the point of delivery specified in the contract;

(4) Be responsible for any loss of and/or damage to the goods occurring before receipt of the shipment by the consignee at the delivery point specified in the contract;

(5) Furnish a delivery schedule and designate the mode of delivering carrier; and

(6) Pay and bear all charges to the specified point of delivery.

(End of clause)

THIS PAGE INTENTIONALLY LEFT BLANK

PART I - THE SCHEDULE - SECTION G
CONTRACT ADMINISTRATION DATA

TABLE OF CONTENTS

CLAUSE		PAGE
G01	ACCOUNTING AND APPROPRIATION DATA	2
G02	CONTRACT MANAGEMENT	2
G03	PAYMENT OFFICE	2
G04	CONTRACT ADMINISTRATION	2

PART I - THE SCHEDULE - SECTION G
CONTRACT ADMINISTRATION DATA

G01 ACCOUNTING AND APPROPRIATION DATA

WORK ORDER ITEM NUMBER: 5KFB62

G02 CONTRACT MANAGEMENT

Marine Design Center
U.S. Army Corps of Engineers
Wanamaker Building
100 Penn Square East
Room 630 South
Philadelphia, Pennsylvania 19107-3391

NOTE: The Marine Design Center is the "Designated Billing Office" as defined by Part II - Contract Clauses - Section I, "Prompt Payments"

G03 PAYMENT OFFICE

U.S. Army Corps of Engineers Finance Center
5720 Integrity Drive
Millington, TN 38054-5005

G04 CONTRACT ADMINISTRATION

Commander and District Engineer
U.S. Army Corps of Engineers District, Philadelphia
ATTN: CENAP-CT-C
Wanamaker Building
100 Penn Square East
Room 643
Philadelphia, Pennsylvania 19107-3390

PART I - THE SCHEDULE - SECTION H
SPECIAL CONTRACT REQUIREMENTS

TABLE OF CONTENTS

H01 CONTRACT ORGANIZATION....2

H02 CONTRACTOR SUBMITTALS....8

H03 DESIGN REQUIREMENTS....9

H04 NOT USED....11

H05 REVIEW OF CONTRACTOR SUBMITTALS....12

H06 CONSTRUCTION PLAN....13

H07 CONTRACTOR'S SAFETY PLAN....14

H08 PROCUREMENT PLAN....15

H09 SUBCONTRACTING PLAN....15

H10 MATERIALS AND EQUIPMENT SCHEDULE....16

H11 SUBMITTAL SCHEDULE....17

H12 DRAWING INDEX....18

H13 ENGINEERING AND DRAWINGS....18

H14 "AS-BUILT" DRAWINGS....30

H15 SUBSTITUTIONS....32

H16 MANUFACTURER OR SUBCONTRACTOR DRAWINGS AND MANUALS....33

H17 OPERATOR'S MANUAL....34

H18 RECORD PHOTOGRAPHS....35

H19 GOVERNMENT PROPERTY....36

H20 PROGRESS PAYMENT BASED ON PERCENTAGE OR STAGE OF COMPLETION....37

PART I - THE SCHEDULE - SECTION H
SPECIAL CONTRACT REQUIREMENTS

H01 CONTRACT ORGANIZATION

a. PLANNING

Planning is line items 0001AA and 0002AA of the contract and commences only after receipt by the contractor of a Notice of Contract Award (Award) and a Notice To Proceed (NTP) with contract line item 0001AA or 0002AA, "PLANNING," respectively. In this first phase of the contract, the Contractor is required to present planning information that demonstrates a logical, orderly and workable approach to the contract. The Contractor is not authorized to begin the engineering and scheduling until this phase of the project is completed, and the planning documents are approved by the COR, at which time an additional Notice To Proceed will be issued.

b. ENGINEERING AND SCHEDULING

Engineering and Scheduling is line items 0001AB, 0002AB, 0003AB and 0004AB of the contract and commences only after receipt by the Contractor of a Notice To Proceed with contract Line Item 0001AB, 0002AB, 0003AB or 0004AB, "ENGINEERING & SCHEDULING," respectively. In this second phase of the contract, the Contractor is required to complete the design, perform other production engineering, and develop the contract schedule. The Contractor is not authorized to begin physical construction until this phase of the project is completed, and the engineering and scheduling documents are approved by the COR, at which time an additional Notice To Proceed will be issued.

c. CONSTRUCT, TEST AND DELIVER

Construct, Test, and Deliver is line items 0001AC, 0002AC, 0003AC and 0004AC, of the contract and will commence only after completion of the Engineering and Scheduling phase and receipt by the Contractor of Notice To Proceed with Line Item 0001AC, 0002AC, 0003AC or 0004AC, respectively. During this third phase of the contract, necessary records and scheduling documents shall be completed, the vessel constructed, tests and trials performed and physical delivery shall be made. This phase of the contract is completed with receipt by the Contractor of a letter of FINAL ACCEPTANCE and submittal of all final documents.

d. PHASE SEQUENCING

It is intended that the three phases for each vessel will be performed sequentially.

The time allotted for each phase spans an interactive process involving both the Contractor and the Government. This process includes preparation, review and approval of the phase submittals, contract administration, mailing, preparation and issuance of Notices To Proceed.

In order for the Contractor to plan the work and for the Government to properly apply Liquidated Damages and Termination Clauses, a graphic identifying the sequence milestones and the performance period allotted to each milestone has been developed and is shown on a following page.

The graphic shows the three basic contract phases. Each contract phase is further subdivided into the milestones that must be completed within each phase and the amount of time allowed to accomplish each. Note that the total time allowed for each phase of the contract matches the "REQUIRED DELIVERY SCHEDULE" in Clause F01. The graphic will be updated to reflect the successful offeror's proposed schedule if it is shorter than the required schedule.

The milestones and periods of performance identified in the graphic are contract requirements.

The Contractor must be aware that the quality, completeness and detail of the submittals have a direct bearing on the approval process. Extended review iterations will extend the time necessary to receive approval of the submittals and will subject the contractor to assessment of Liquidated Damages or Termination for Default.

Refer to Clause H05 for information concerning the submittal review process.

CLIN 0001

Receipt by Contractor of NTP Phase I (Planning)

Phase I 30 Calendar Days	20 Calendar Days	Receipt @ MDC of initial submittal of all Phase I deliverables
	5 CD	Receipt by Contractor of submittal review
	5 CD	Receipt @ MDC of final revised Phase I deliverables (if necessary)
10 CD		Receipt by Contractor of NTP Phase II (Engineering & Scheduling)
Phase II 180 Calendar Days	120 Calendar Days	Receipt @ MDC of initial submittal of all Phase II deliverables
	30 CD	Receipt by contractor of submittal review
	30 CD	Receipt @ MDC of final revised Phase II deliverables (if necessary)
30 CD		Receipt by Contractor of NTP Phase III (Construct, Test & Deliver)
Phase III 330 CD	330 Calendar Days	Construct, Test and Deliver Final Acceptance

CONTRACT PHASE SEQUENCING

CLIN 0002

Receipt by Contractor of NTP Phase I (Planning)

Phase I 60 Calendar Days	40 Calendar Days	Receipt @ MDC of initial submittal of all Phase I deliverables
	10 CD	Receipt by Contractor of submittal review
	10 CD	Receipt @ MDC of final revised Phase I deliverables (if necessary)
20 CD		Receipt by Contractor of NTP Phase II (Engineering & Scheduling)
Phase II 210 Calendar Days	150 Calendar Days	Receipt @ MDC of initial submittal of all Phase II deliverables
	30 CD	Receipt by contractor of submittal review
	30 CD	Receipt @ MDC of final revised Phase II deliverables (if necessary)
30 CD		Receipt by Contractor of NTP Phase III (Construct, Test & Deliver)
Phase III 360 CD	360 Calendar Days	Construct, Test and Deliver Final Acceptance

CONTRACT PHASE SEQUENCING

CLIN 0003

Receipt by Contractor of NTP Phase I (Planning)

Phase I 0 Calendar Days	0 Calendar Days	Receipt @ MDC of initial submittal of all Phase I deliverables
	0 CD	Receipt by Contractor of submittal review
	0 CD	Receipt @ MDC of final revised Phase I deliverables (if necessary)
0 CD		Receipt by Contractor of NTP Phase II (Engineering & Scheduling)
Phase II 90 Calendar Days	30 Calendar Days	Receipt @ MDC of initial submittal of all Phase II deliverables
	30 CD	Receipt by contractor of submittal review
	30 CD	Receipt @ MDC of final revised Phase II deliverables (if necessary)
30 CD		Receipt by Contractor of NTP Phase III (Construct, Test & Deliver)
Phase III 360 CD	360 Calendar Days	Construct, Test and Deliver Final Acceptance

CONTRACT PHASE SEQUENCING

CLIN 0004:

Receipt by Contractor of NTP Phase I (Planning)

Phase I 0 Calendar Days	0 Calendar Days	Receipt @ MDC of initial submittal of all Phase I deliverables
	0 CD	Receipt by Contractor of submittal review
	0 CD	Receipt @ MDC of final revised Phase I deliverables (if necessary)
0 CD		Receipt by Contractor of NTP Phase II (Engineering & Scheduling)
Phase II 90 Calendar Days	30 Calendar Days	Receipt @ MDC of initial submittal of all Phase II deliverables
	30 CD	Receipt by contractor of submittal review
	30 CD	Receipt @ MDC of final revised Phase II deliverables (if necessary)
30 CD		Receipt by Contractor of NTP Phase III (Construct, Test & Deliver)
Phase III 360 CD	360 Calendar Days	Construct, Test and Deliver Final Acceptance

CONTRACT PHASE SEQUENCING

H02 CONTRACTOR SUBMITTALS

A. PLANNING PHASE SUBMITTALS

The following is a summary of the items that the Contractor must submit during each Planning Phase. All items must be received, reviewed and accepted by the COR before a Notice To Proceed (NTP) will be issued for the Engineering and Scheduling phases of the contact:

SUBMITTAL ITEM	CONTRACT CLAUSE REFERENCE
• Quality Control Plan for Phase II	E03
• Authorized Contractor Representative List	E03
• Construction Plan	H06
• Procurement Plan	H08
• Subcontracting Plan	H09
• Engineering Qualifications	H09
• Submittal Schedule	H11
• Drawing Index	H12

B. ENGINEERING & SCHEDULING PHASE SUBMITTALS

The following is a summary of items that the Contractor must submit after a Notice To Proceed with each "ENGINEERING & SCHEDULING" phase of the contract is issued. All items must be received, reviewed, and approved by the COR before a Notice To Proceed with the "CONSTRUCT, TEST & DELIVER" phase of the contract will be issued. The following items are required:

SUBMITTAL ITEM	CONTRACT CLAUSE REFERENCE
• Weight Estimates	C115
• Damaged Stability Analysis	C150
• Trim & Stability Analysis	C155
• Quality Control & Inspection Plan for Phase III	E03
• Test Memoranda & Agenda	E05
• Contractor Safety Plan	H07
• Material & Equipment Schedule	H10
• Engineering & Drawings	H13
• Quality Control & Inspection Plan for Phase III	E03
• ABS Reviewed and Stamped Drawings and Documents	C004 & H13
• USPHS Reviews and Documents	C004

C. CONSTRUCT, TEST, & DELIVER PHASE SUBMITTALS

The following is a summary of items that the Contractor must submit after a Notice To Proceed with each "CONSTRUCT, TEST, and DELIVER" phase of the contract is issued. All items must be received, reviewed and approved by the COR before Final Payment will be made. The following items are required:

SUBMITTAL ITEM	CONTRACT CLAUSE REFERENCE
• ABS Certificate	C004
• U.S. Public Health Service Certificate	C004
• Certificate of Wire Rope Minimum Breaking Strength	C456
• Test Schedule	E05
• Test Report	E05
• Inclining Report	E05
• Noise Survey	E05
• Potable Water Lab Report	E06 & E07
• Commercial Warranties	E09
• Purchase Orders\Specifications	H10
• As-Built Drawings	H14
• Manufacturer's or Subcontractor's Drawings and Manuals	H16
• Operator's Manual	H17
• Record Photographs	H18

H03 DESIGN REQUIREMENTS

The Contractor shall provide the necessary engineering to develop the Final Design of each vessel.

The scantlings and main structure for the hull, deckhouse and foundations shall be defined. Structural drawings shall delineate all structural members, brackets, plating and plate seams, all welding and all joint details complete with all dimensions noted. "Typical" views may be used for numerous repetitions of identical or mirror images. Every effort shall be made to make the design consistent from sheet to sheet and drawing to drawing. Calculations showing that all plate, bulkheads, stiffeners, girders, stanchions and diagonals meet the minimum requirements of ABS and any specific requirements of SECTION C of this solicitation shall be submitted with the structural drawings. The calculations shall be clearly annotated as to specific requirement being addressed and explanation of all assumptions.

A detailed Weight Estimate shall be generated using the MDC Work Breakdown Structure (WBS) system organization. The Weight Estimate shall break down the weights sufficiently so as to allow easy review of all values with reference to the drawings they represent, their quantity and location. Weights shall not be lumped into single values by deck

level or longitudinal segment. An example of an acceptable weight estimate reflecting level of detail shall be provided to the successful bidder. A detailed Intact and Damage Stability analysis shall be performed for each vessel. Each report shall be prepared in accordance with the requirements noted in the appropriate clauses of SECTION C (Clause C115, C150, and C155).

The propulsion system will be defined with main engine, gear, shaft couplings, shafting, and propellers selected. Drawings shall define the machining details of the shafts, liners, bearings and couplings. Calculations justifying the engines, gears, shafting and propeller selections shall be submitted with the associated drawing. Shaft sizing calculations shall be included on the shaft drawing. A torsional analysis of the system shall be performed.

Rudder design shall include shaft sizing calculations presented on the rudder drawings. Machining details for all shafts, liners, bearings and seals shall be defined on the drawings. The steering system shall include all pumps, cylinders, pipe, components, greasing methods, jockey bars, pins, stops and tanks. Foundations shall be developed and detailed for all components. Calculations sizing the jockey bars, stops, cylinders and their foundations and catalog cut-sheets of the primary components shall be submitted with the drawings.

For the mechanical systems, all pumps, compressors, heat exchangers, hydraulic components and machinery, deck machinery and ancillary equipment shall be sized and selected. The mechanical system drawings shall show all valves, filters, controls, receivers, pumps, strainers, sea chests, consumers, takedown connections, separators and other principal features or devices to scale. The drawings shall consist of a system schematic on the first sheet, a detailed system drawing superimposed on a vessel arrangement with a Material List and a Equipment List and necessary sections and elevations on the second and subsequent sheets. On detailed drawings, pipe 1” diameter and smaller may be shown as single lines, while larger pipe shall be shown as double lines depicting the actual scaled size. Pipe shall be located and dimensioned in the vertical and horizontal plane. Sections and elevations are required only to ensure that piping, ducting and cabling are routed through congested areas without interference. Calculations sizing the equipment shall be submitted with the system drawing. These calculations shall include the sizing of piping systems and pumps. Catalog cut-sheets of all equipment shall be submitted with the drawing.

Major equipment on all drawings (engines, motors, pumps, strainers, etc.) shall be shown in actual outline form (not schematic or by block). System routings shall be sufficiently detailed to identify the intended routing with respect to vessel structure, elevation, major vessel equipment and major components of other systems, but without dimensions.

HVAC systems shall be defined and will include the calculations of fan and blower sizes and powers, heating and air conditioning equipment sizing and duct sizing. The HVAC system drawings shall consist of a system schematic on the first sheet, a detailed system drawing superimposed on a vessel arrangement with a Material List and a Equipment List and necessary

sections and elevations on the second and subsequent sheets. Ducting shall be located and dimensioned in the vertical and horizontal planes. Sections and elevations are required only to ensure that piping, ducting and cabling are routed through congested areas without interference. An HVAC load analysis will be completed. These calculations shall be submitted with the system drawings.

The electrical system shall be defined with consumers identified and quantified, controls and switchgear identified, a complete load analysis, short circuit analysis and one line diagram prepared and generator sets selected. Cabling and lighting drawings shall be prepared using the general arrangements for background. Catalog cut-sheets of the gensets and primary power equipment shall be submitted with the system drawings.

Joiner details and material selection shall be worked out with schedules for sheathing, insulation, doors, windows, furniture, fixtures, etc. Catalog cut-sheets shall be submitted with the system drawings.

Any drawing submitted without the required catalog cut sheets and calculations, as stated herein or in the appropriate clause of SECTION C, will not be considered a formal submittal and will not be reviewed.

During the development of the Final Design, the Contractor may discover circumstances that dictate a need to change some of the equipment or materials specifically required by the Contract. Examples of this situation might be that the item is no longer available, or the lead time is too great to meet the vessel delivery. Such circumstances shall be immediately identified to the COR by letter for resolution, along with a proposed solution. Adjustments to the Contract required as a result of such circumstances, will be made under the “CHANGES” Clause.

The Contractor shall prepare Final Design drawings for regulatory submittals, COR submittal, “As-Built” drawings, and other technical details necessary to support his administration, operation, and production practices. Refer to “ENGINEERING AND DRAWINGS” Clause for a minimum list of required drawings and drafting standards.

H04 NOT USED

H05 REVIEW OF CONTRACTOR SUBMITTALS

The Marine Design Center (MDC) will review the drawings, data and other material submitted by the Contractor in the various contract phases for each vessel.

Submittals from the Contractor must be clear as to what the submittal represents and the action the Contractor requests the Government perform.

The Government's review is intended to be limited to the functional aspects of the submittals with limited technical review of general cursory nature only.

The Contractor shall comply with the requirements of the design embodied in the contract. Where review, approval, classification or certification by ABS, USCG, USPHS or other regulatory agency is a provision of the contract, Government review of Contractor submittals may not address the requirements of those agencies. It is implicit that Government acceptance of submittals will be contingent upon satisfactory fulfillment of those requirements.

Submittals found to be completely acceptable to the Contracting Officer's Representative without comment will be marked "ACCEPTED."

Submittals found to be generally acceptable to the Contracting Officer's Representative with qualifying comments will be marked "ACCEPTED WITH COMMENTS" but may or may not require resubmission depending on the COR's assessment of the criticality of the comments.

"ACCEPTED WITH COMMENTS" submittals being resubmitted will be reviewed only to ensure that the previous comments have been adequately incorporated. Resubmission requirements will be clearly marked on the return.

Submittals unacceptable to the Contracting Officer's Representative will be marked "NOT ACCEPTED." Submittals not accepted will always require full and complete resubmittal. Such resubmittal will result in a full and complete review as though it was a first submittal.

Submittals furnished for information only or for which the Contractor has not indicated the required review action will be marked "EXAMINED."

The Contractor shall insure that all review comments are incorporated in corrected submittal documents or are rebutted in separate correspondence. The Contractor is encouraged to completely discuss all submittal comments with the MDC author in order to insure complete and effective communication.

The Contractor will not use the drawing review or submittal process for contract deviations. Changes in equipment, materials, construction techniques or details must be the subject of separate, specific correspondence. Any such request made by the Contractor must be specific and clear as to what is contractually required, the proposed change, location and/or extent, benefits resulting from the change and effect on contract cost and delivery.

Submittals for review by the Government will be return mailed in accordance with the Phase Sequencing Graphic. Refer to Clause H01. Contractors shall plan their submittal schedules so as not to affect contract performance.

H06 CONSTRUCTION PLAN

After receipt of the Notice To Proceed with CLIN 0001AA PLANNING, the Contractor shall develop and submit to the Contracting Officer's Representative the Contractor's proposed plan for the construction of the vessel.

The plan shall be prepared on USACE standard ENG Form 2454 (Construction Progress Chart) furnished by the Government. A copy of this form is included in Section J. The plan will be a summary level view of the contract. The plan will show the Contractor's proposed starting date, duration in weeks, ending date, and percentage completion (both as planned and as achieved) for all of the major activities of the contract. The plan shall also show the amount of the total bid price (percent and actual dollars) associated with each activity. The plan will also have the progress "S" curve plotted (both as planned and as achieved).

The activities shown on the chart shall be developed by the Contractor and shall include, as a minimum, the following:

- Direct Construction Labor, separated into principal vessel areas
- Material Purchases separated into principal vessel areas
- Material Deliveries separated into principal vessel areas
- Engineering
- Construction of modules
- Test and Trials
- Delivery (Shipment)
- Overhead and Profit

In addition, the following milestone events, as a minimum, shall be marked on the chart time-line:

- Award of Contract
- Notice to Proceed with "PLANNING"
- Notice to Proceed with "ENGINEERING & SCHEDULING"
- Notice To Proceed with "CONSTRUCT, TEST & DELIVER"
- Tests and Trials
- Final Inspection
- Provisional Acceptance
- Delivery
- Final Acceptance

After review, revision as necessary and approval by the COR; the plan shall be updated and submitted monthly with the Progress Payment Request.

H07 CONTRACTOR'S SAFETY PLAN

After Notice To Proceed with CLIN 0001AB, ENGINEERING AND SCHEDULING, the Contractor shall submit a Safety Plan for the facility at which the work is to be performed.

The Contractor's Safety Plan shall outline the procedures used by the Contractor to ensure the safety of his employees and minimize lost-time accidents.

The Safety Plan shall identify by name and title the Contractor's Safety Officer who is responsible for enforcing the Contractor's safety rules and the Contractor's designated "Competent Person" (29 CFR 1915.7) who is responsible for testing the atmosphere in confined and enclosed spaces. In the event that the Contractor has no designated "competent person," a statement that a Marine Chemist will perform the tests and inspections which require a "competent person" shall be included with the Safety Plan, and the name of the Marine Chemist shall appear on the Subcontracting Plan (Clause H09).

H08 PROCUREMENT PLAN

After Notice To Proceed with CLIN 0001AA, PLANNING, the Contractor shall submit a Procurement Plan for the vessel.

The Procurement Plan shall identify the major or schedule controlling components and equipment in the contract, estimated delivery time for each, the selected vendor and planned date of ordering.

The Procurement Plan shall be in "spread sheet" format and will later be developed into the Material and Equipment Schedule of clause H10.

Upon written approval of the Procurement Plan by the COR, the contractor may commence procurement of any or all of those items on the plan.

Costs for long lead items and materials which are in the accepted procurement plan must be included on the bid schedule under line item 0001AC, CONSTRUCT, TEST, AND DELIVER. Progress payments will be made in accordance with H20, PROGRESS PAYMENT BASED ON A PERCENTAGE OR STAGE OF COMPLETION.

H09 SUBCONTRACTING PLAN

After Notice To Proceed with CLIN 0001AA, PLANNING, the Contractor shall submit a Subcontracting Plan for the contract. This should not be confused with the SUBCONTRACTING PLAN required of Large Business as a part of their affirmative action responsibilities.

The Subcontracting Plan shall identify the areas or features of the contract or vessel which will be performed, all or in part by subcontractors. The plan shall identify the scope of work, subcontractor firm's name, and reference the subcontractor's proposal or letter of intent.

The Contractor shall provide copies of all pre and post contract correspondence between themselves and their representatives and all potential subcontractors when requested by the Contracting Officer's Representative.

The Subcontracting Plan shall specifically address the Contractor's plan for design and engineering.

If any part of the Contractor's engineering is to be subcontracted, the Contractor shall also submit the subcontractor's qualifications, the scope of work and the contract, purchase order, or letter of intent.

If the engineering is to be performed by the Contractor's hired labor, the plan shall make that

specifically clear. The Contractor shall provide a statement of qualifications for any "in house" engineering personnel.

All persons employed as naval architects or marine engineers, either by the Contractor or by any subcontractor, shall be professionally competent by virtue of education, training, experience or licensing.

The Subcontracting Plan shall be in "spread sheet" format and will be incorporated into the Material and Equipment Schedule of Clause H10.

Upon written approval of the Subcontracting Plan by the Contracting Officer's Representative, the Contractor is authorized to proceed to place the subcontracts on the plan.

H10 MATERIALS AND EQUIPMENT SCHEDULE

After Notice To Proceed with CLIN 0001AB, ENGINEERING & SCHEDULING, the Contractor shall develop a schedule of all items, including major stock materials (excluding nuts, bolts, gaskets, consumables, etc.), to be used in the construction of the vessel. The schedule shall be prepared in "spread sheet" format and contain the following information for each vessel:

- Component/equipment
- Quantity
- Vendor name and address
- Make, model, and options
- Drawing references (if appropriate)
- Purchase Order or Contract Number
- Scheduled order date
- Actual order date
- Scheduled (promised) receipt at shipyard
- Actual receipt at shipyard

After submittal, review, revision and approval by the COR, the schedule shall be updated and submitted to the Government monthly. Final submission to MDC shall include priced copies of all purchase orders, purchase specifications and receipts.

Upon written approval of the schedule by the Contracting Officer's Representative, the Contractor is authorized to proceed with procurement of all items and materials in the schedule.

At any time during the contract, the COR may request and the Contractor shall furnish, correspondence, telephone conversation records, priced copies of purchase orders, purchase

specifications and material receipts or other records between the Contractor and the various subcontractors.

H11 SUBMITTAL SCHEDULE

After receipt of Notice To Proceed with CLIN 0001AA, PLANNING, the Contractor shall develop a submittal schedule for all Contractor submittals required by the contract (Refer to Clause H02).

The schedule shall be in "spread sheet" format and contain the following minimum information for each vessel:

- Drawing number (if any)
- Name or title of submittal
- Scheduled submittal date(s)
- Actual submittal date(s)
- Submittal letter number
- Reply letter number
- Reply letter date

For drawings or items with repetitive submittals (monthly, etc.) the schedule must allow for drawing review iterations or repetitive submissions.

After review, subsequent revision and approval by the COR, the schedule will be updated and submitted with the monthly Progress Payment Request for the life of the contract.

H12 DRAWING INDEX

After Notice To Proceed with CLIN 0001AA, PLANNING, the Contractor shall prepare an index of all drawings to be prepared by the Contractor as part of this contract. The list will be subdivided into two parts.

The first part shall list all the drawings the contractor intends or expects to prepare during the "ENGINEERING & SCHEDULING" phase of the contract. See Clause H13.

The second part shall list all As-Built drawings. The As-Built drawings shall consist of updated and corrected originals of all the drawings prepared by the Contractor (listed in the first part of this index) plus any standard drawings or details created by the Contractor during construction.

Both parts of this index shall be complete with drawing title, MDC Drawing Number, the Contractor's drawing number (if any) and scheduled submittal date.

After review, revision, assignment of MDC drawing numbers and approval by the COR the index will be updated and submitted monthly to the Contracting Officer's Representative.

H13 ENGINEERING AND DRAWINGS

A. ENGINEERING

The Contractor will perform engineering (prepare calculations, drawings, etc.) in order to:

- Develop the Final Design
- Obtain regulatory body approval
- Develop detailed piping and cable routings
- Develop detailed ducting routings
- Develop shop drawings
- Develop construction details
- Prepare complete bills of materials
- Obtain COR approval for NTP with Construction
- Complete As-Built drawings

All drawings and documents prepared by the contractor or substantively modified by the contractor shall be forwarded to the Marine Design Center for review, comment, and acceptance.

It is the responsibility of the Contractor to schedule submission of the listed drawings/documents to allow for review by MDC, without adversely affecting the construction schedule or submittals to regulatory bodies (refer to Clause H02).

B. DRAWINGS

All drawings shall be prepared in CADD form, and shall conform to the American National Standards Institute (ANSI) Standard Y14. Drawings shall be flat, folded to 81/2" x 11" size and trimmed to within 1/2" of the outer border. Drawing size shall be format A (horizontal or vertical) or D as defined by ANSI Y14.1. In no case will drawings of any other size or format be accepted. Title blocks shall conform to ANSI dimensions and shall be submitted to MDC for approval before use. Drawings of two or more sheets shall have follow-on sheets titled according to ANSI Y14.1 for continuation sheets and shall not be separately titled.

Four copies of each drawing, calculation, report, or document shall be submitted to MDC for review. Only if appropriate numbers of copies are submitted will one copy be returned to the Contractor showing the Government review action.

One copy of each drawing or document reviewed and stamped by ABS with its associated ABS comment letter shall be provided to the COR.

One copy of all drawings and review comments from FDA/USPH shall be provided to the COR.

C. DESIGN OUTLINE

The "ENGINEERING & SCHEDULING" phase design effort to complete the Final Design shall include the preparation of drawings, calculations, and reports that address the topics listed on the following guidance index. Refer to Clause H03 for basic level of detail guidance for all vessel systems and refer to the specific clauses of SECTION C for any detailed requirements. It is acceptable to combine details and features on drawings.

DRAWING NO.	TITLE	DELIVERABLE
CLIN 0001		
557-C000-01	TITLE SHEET	DRAWING
557-C000-02 *	DRAWING INDEX	DRAWING
557-C105-01	LINES PLAN	DRAWING
557-C105-02	FRAMES & OFFSETS	DRAWING
557-C115-01	WEIGHT ESTIMATE	CALCULATIONS
557-C115-02	DECKHOUSE WEIGHT ESTIMATE	CALCULATIONS

557-C115-03	INCLINING EXPERIMENT & DEADWEIGHT SURVEY	REPORT
557-C130-01	TANK CAPACITY PLAN	DRAWING
557-C130-02 *	SOUNDING TABLES	TABLES
557-C145-01	TONNAGE MEASUREMENT DIAGRAM	DRAWING
557-C150-01	DAMAGE STABILITY	CALCULATIONS
557-C155-01	INTACT STABILITY	CALCULATIONS
557-C170-01	DRY DOCKING PLAN	DRAWING
557-C180-01	NOISE STUDY	REPORT
557-C205-01	OUTBOARD PROFILE	DRAWING
557-C215-01	GENERAL ARRANGEMENTS	DRAWING
557-C233-01	PILOTHOUSE ARRANGEMENT & DETAILS	DRAWING
557-C245-01	HOLD & MACHINERY ARRANGEMENTS	DRAWING
557-C255-01*	CONSOLE ARRANGEMENTS	DRAWING
557-C301-01	MIDSHIP SECTION	DRAWING
557-C301-02	INBOARD PROFILE	DRAWING
557-C305-01	LONGITUDINAL STRUCTURE	DRAWING
557-C305-02	TRANSVERSE FRAMING & DETAILS	DRAWING
557-C307-01	DECK & BOTTOM STRUCTURE	DRAWING
557-C307-02	SIDE SHELL STRUCTURE	DRAWING
557-C309-01	TRANSVERSE BULKHEADS	DRAWING
557-C313-01	FLOATING DECKHOUSE DESIGN	DRAWING
557-C313-02	ISOLATOR SELECTION & FOUNDATION CALCULATIONS	CALCULATIONS
557-C315-01	DECKHOUSE STRUCTURE	DRAWING
557-C316-01	STACK CONSTRUCTION & DETAILS	DRAWING
557-C317-01	MASTS	DRAWING
557-C320-01	TANK DETAILS	DRAWING
557-C325-01	SEA CHEST CONSTRUCTION & DETAILS	DRAWING
557-C326-01	TRANSDUCER WELL CONSTRUCTION	DRAWING
557-C330-01	FOUNDATIONS	DRAWING
557-C399-01	DESIGN COMPENDIUM	CALCULATIONS
557-C406-01	PAINT SCHEDULE	DRAWING
557-C410-01	HULL OUTFITTING	DRAWING
557-C410-02	TOWKNEE CONSTRUCTION	DRAWING
557-C415-01	DOORS, WINDOWS, HATCHES & MANHOLES SCHEDULE	DRAWING
557-C420-01	DECK FITTINGS	DRAWING
557-C425-01	WALKWAYS, RAILINGS, GRATINGS & FLOOR PLATES	DRAWING
557-C427-01	VERTICAL & INCLINED LADDERS	DRAWING
557-C430-01	DECK COVERINGS	DRAWING

557-C435-01		JOINER WORK	DRAWING
557-C436-01		INSULATION & SHEATHING	DRAWING
557-C437-01		FURNITURE & FURNISHINGS	DRAWING
557-C445-01		LIFESAVING & SAFETY	DRAWING
557-C460-01		NAMEPLATES, NOTICES & MARKINGS	DRAWING
557-C480-01		TELEVISION ANTENNA SYSTEM SCHEMATIC	DRAWING
557-C605-01		PROPULSION CONTROL SYSTEM SCHEMATIC	DRAWING
557-C606-01		PROPELLER & NOZZLE	DRAWING
557-C610-01		SHAFTING ARRANGEMENT & INSTALLATION DETAILS	DRAWING
557-C612-01		STEERING RUDDER DETAILS & ARRANGEMENT	DRAWING
557-C612-02		FLANKING RUDDER DETAILS & ARRANGEMENT	DRAWING
557-C615-01		STEERING SYSTEM	DRAWING
557-C630-01		FUEL OIL SYSTEM	DRAWING
557-C635-01		LUBE OIL SYSTEM	DRAWING
557-C636-01		WASTE OIL SYSTEM	DRAWING
557-C637-01		OILY WATER SYSTEM	DRAWING
557-C640-01		COOLING WATER SYSTEM	DRAWING
557-C650-01		EXHAUST SYSTEMS	DRAWING
557-C660-01		BILGE & BALLAST SYSTEMS	DRAWING
557-C665-01		POTABLE WATER SYSTEM	DRAWING
557-C667-01		SANITARY, SEWAGE & GREYWATER SYS	DRAWING
557-C669-01		DRAINAGE SYSTEMS	DRAWING
557-C670-01		VENTS, SOUNDS & OVERFLOWS	DRAWING
557-C675-01		FIRE MAIN SYSTEM	DRAWING
557-C677-01		FIXED FIRE EXTINGUISHING SYSTEM	DRAWING
557-C678-01		FIRE DETECTION & ALARM SYSTEM	DRAWING
557-C679-01	*	FIRE CONTROL PLAN	DRAWING
557-C685-01		HEATING, VENTILATION & AIR CONDITIONING SYSTEM	DRAWING
557-C685-02		ENGINE ROOM HEATING & VENTILATION	DRAWING
557-C685-03		HVAC SYSTEM CALCULATIONS	CALCULATIONS
557-C690-01		COMPRESSED AIR SYSTEM	DRAWING
557-C692-01		GENERAL ALARM SYSTEM	DRAWING
557-C692-02		BILGE ALARM SYSTEM SCHEMATIC	DRAWING
557-C692-03		MISCELLANEOUS ALARM SCHEMATIC	DRAWING
557-C710-01		AC SYSTEM LOAD ANALYSIS	DRAWING
557-C710-02		DC SYSTEM LOAD ANALYSIS	DRAWING

557-C715-01	FAULT CURRENT ANALYSIS	CALCULATIONS
557-C720-01	ONE LINE DIAGRAM (AC & DC)	DRAWING
557-C725-01	CABLE SCHEDULE & VOLTAGE DROP ANALYSIS	DRAWING
557-C730-01	LIGHTING AND RECEPTACLE PLAN	DRAWING
557-C740-01	SWITCHGEAR	DRAWING
557-C760-01	SHORE & OFF-VESSEL POWER DETAILS	DRAWING
557-C765-01	TELEPHONE & DATA COMMUNICATIONS SYSTEM SCHEMATIC	DRAWING
557-C770-01	NAVIGATION EQUIPMENT	DRAWING
557-C780-01	GENERAL ALARM SYSTEM	DRAWING
557-C780-02	BILGE ALARM SYSTEM SCHEMATIC	DRAWING
557-C780-03	MISCELLANEOUS ALARM SCHEMATIC	DRAWING
557-C780-04	CO MONITORING & ALARM SYSTEM	DRAWING

CLIN 0002

556-C000-01	TITLE SHEET	DRAWING
556-C000-02 *	DRAWING INDEX	DRAWING
556-C105-01	LINES PLAN	DRAWING
556-C105-02	FRAMES & OFFSETS	DRAWING
556-C115-01	WEIGHT ESTIMATE	CALCULATIONS
556-C115-02	DECKHOUSE WEIGHT ESTIMATE	CALCULATIONS
556-C115-03	INCLINING EXPERIMENT & DEADWEIGHT SURVEY	REPORT
556-C130-01	TANK CAPACITY PLAN	DRAWING
556-C130-02 *	SOUNDING TABLES	TABLES
556-C145-01	TONNAGE MEASUREMENT DIAGRAM	DRAWING
556-C150-01	DAMAGE STABILITY	CALCULATIONS
556-C155-01	INTACT STABILITY	CALCULATIONS
556-C170-01	DRY DOCKING PLAN	DRAWING
556-C180-01	NOISE STUDY	REPORT
556-C205-01	OUTBOARD PROFILE	DRAWING
556-C215-01	GENERAL ARRANGEMENTS	DRAWING
556-C233-01	PILOTHOUSE ARRANGEMENT & DETAILS	DRAWING
556-C245-01	HOLD & MACHINERY ARRANGEMENTS	DRAWING
556-C255-01 *	CONSOLE ARRANGEMENTS	DRAWING
556-C301-01	MIDSHIP SECTION	DRAWING
556-C301-02	INBOARD PROFILE	DRAWING
556-C305-01	LONGITUDINAL STRUCTURE	DRAWING
556-C305-02	TRANSVERSE FRAMING & DETAILS	DRAWING

556-C307-01	DECK & BOTTOM STRUCTURE	DRAWING
556-C307-02	SIDE SHELL STRUCTURE	DRAWING
556-C309-01	TRANSVERSE BULKHEADS	DRAWING
556-C313-01	FLOATING DECKHOUSE DESIGN	DRAWING
556-C313-02	ISOLATOR SELECTION & FOUNDATION CALCULATIONS	CALCULATIONS
556-C315-01	DECKHOUSE STRUCTURE	DRAWING
556-C316-01	STACK CONSTRUCTION & DETAILS	DRAWING
556-C317-01	MASTS	DRAWING
556-C320-01	TANK DETAILS	DRAWING
556-C325-01	SEA CHEST CONSTRUCTION & DETAILS	DRAWING
556-C326-01	TRANSDUCER WELL CONSTRUCTION	DRAWING
556-C330-01	FOUNDATIONS	DRAWING
556-C399-01	DESIGN COMPENDIUM	CALCULATIONS
556-C406-01	PAINT SCHEDULE	DRAWING
556-C410-01	HULL OUTFITTING	DRAWING
556-C410-02	TOWKNEE CONSTRUCTION	DRAWING
556-C415-01	DOORS, WINDOWS, HATCHES & MANHOLES SCHEDULE	DRAWING
556-C420-01	DECK FITTINGS	DRAWING
556-C425-01	WALKWAYS, RAILINGS, GRATINGS & FLOOR PLATES	DRAWING
556-C427-01	VERTICAL & INCLINED LADDERS	DRAWING
556-C430-01	DECK COVERINGS	DRAWING
556-C435-01	JOINER WORK	DRAWING
556-C436-01	INSULATION & SHEATHING	DRAWING
556-C437-01	FURNITURE & FURNISHINGS	DRAWING
556-C445-01	LIFESAVING & SAFETY	DRAWING
556-C460-01	NAMEPLATES, NOTICES & MARKINGS	DRAWING
556-C480-01	TELEVISION ANTENNA SYSTEM SCHEMATIC	DRAWING
556-C605-01	PROPULSION CONTROL SYSTEM SCHEMATIC	DRAWING
556-C606-01	PROPELLER & NOZZLE	DRAWING
556-C610-01	SHAFTING ARRANGEMENT & INSTALLATION DETAILS	DRAWING
556-C612-01	STEERING RUDDER DETAILS & ARRANGEMENT	DRAWING
556-C612-02	FLANKING RUDDER DETAILS & ARRANGEMENT	DRAWING
556-C615-01	STEERING SYSTEM	DRAWING
556-C630-01	FUEL OIL SYSTEM	DRAWING

556-C635-01		LUBE OIL SYSTEM	DRAWING
556-C636-01		WASTE OIL SYSTEM	DRAWING
556-C637-01		OILY WATER SYSTEM	DRAWING
556-C640-01		COOLING WATER SYSTEM	DRAWING
556-C650-01		EXHAUST SYSTEMS	DRAWING
556-C660-01		BILGE & BALLAST SYSTEMS	DRAWING
556-C665-01		POTABLE WATER SYSTEM	DRAWING
556-C667-01		SANITARY, SEWAGE & GREYWATER SYS	DRAWING
556-C669-01		DRAINAGE SYSTEMS	DRAWING
556-C670-01		VENTS, SOUNDS & OVERFLOWS	DRAWING
556-C675-01		FIRE MAIN SYSTEM	DRAWING
556-C677-01		FIXED FIRE EXTINGUISHING SYSTEM	DRAWING
556-C678-01		FIRE DETECTION & ALARM SYSTEM	DRAWING
556-C679-01	*	FIRE CONTROL PLAN	DRAWING
556-C685-01		HEATING, VENTILATION & AIR CONDITIONING SYSTEM	DRAWING
556-C685-02		ENGINE ROOM HEATING & VENTILATION	DRAWING
556-C685-03		HVAC SYSTEM CALCULATIONS	CALCULATIONS
556-C690-01		COMPRESSED AIR SYSTEM	DRAWING
556-C692-01		GENERAL ALARM SYSTEM	DRAWING
556-C692-02		BILGE ALARM SYSTEM SCHEMATIC	DRAWING
556-C692-03		MISCELLANEOUS ALARM SCHEMATIC	DRAWING
556-C710-01		AC SYSTEM LOAD ANALYSIS	DRAWING
556-C710-02		DC SYSTEM LOAD ANALYSIS	DRAWING
556-C715-01		FAULT CURRENT ANALYSIS	CALCULATIONS
556-C720-01		ONE LINE DIAGRAM (AC & DC)	DRAWING
556-C725-01		CABLE SCHEDULE & VOLTAGE DROP ANALYSIS	DRAWING
556-C730-01		LIGHTING AND RECEPTACLE PLAN	DRAWING
556-C740-01		SWITCHGEAR	DRAWING
556-C760-01		SHORE & OFF-VESSEL POWER DETAILS	DRAWING
556-C765-01		TELEPHONE & DATA COMMUNICATIONS SYSTEM SCHEMATIC	DRAWING
556-C770-01		NAVIGATION EQUIPMENT	DRAWING
556-C780-01		GENERAL ALARM SYSTEM	DRAWING
556-C780-02		BILGE ALARM SYSTEM SCHEMATIC	DRAWING
556-C780-03		MISCELLANEOUS ALARM SCHEMATIC	DRAWING
556-C780-04		CO MONITORING & ALARM SYSTEM	DRAWING

CLIN 0003

658-C000-01	TITLE SHEET	DRAWING
658-C000-02 *	DRAWING INDEX	DRAWING
658-C105-01	LINES PLAN	DRAWING
658-C105-02	FRAMES & OFFSETS	DRAWING
658-C115-01	WEIGHT ESTIMATE	CALCULATIONS
658-C115-02	DECKHOUSE WEIGHT ESTIMATE	CALCULATIONS
658-C115-03	INCLINING EXPERIMENT & DEADWEIGHT SURVEY	REPORT
658-C130-01	TANK CAPACITY PLAN	DRAWING
658-C130-02 *	SOUNDING TABLES	TABLES
658-C145-01	TONNAGE MEASUREMENT DIAGRAM	DRAWING
658-C150-01	DAMAGE STABILITY	CALCULATIONS
658-C155-01	INTACT STABILITY	CALCULATIONS
658-C170-01	DRY DOCKING PLAN	DRAWING
658-C180-01	NOISE STUDY	REPORT
658-C205-01	OUTBOARD PROFILE	DRAWING
658-C215-01	GENERAL ARRANGEMENTS	DRAWING
658-C233-01	PILOTHOUSE ARRANGEMENT & DETAILS	DRAWING
658-C245-01	HOLD & MACHINERY ARRANGEMENTS	DRAWING
658-C255-01 *	CONSOLE ARRANGEMENTS	DRAWING
658-C301-01	MIDSHIP SECTION	DRAWING
658-C301-02	INBOARD PROFILE	DRAWING
658-C305-01	LONGITUDINAL STRUCTURE	DRAWING
658-C305-02	TRANSVERSE FRAMING & DETAILS	DRAWING
658-C307-01	DECK & BOTTOM STRUCTURE	DRAWING
658-C307-02	SIDE SHELL STRUCTURE	DRAWING
658-C309-01	TRANSVERSE BULKHEADS	DRAWING
658-C313-01	FLOATING DECKHOUSE DESIGN	DRAWING
658-C313-02	ISOLATOR SELECTION & FOUNDATION CALCULATIONS	CALCULATIONS
658-C315-01	DECKHOUSE STRUCTURE	DRAWING
658-C316-01	STACK CONSTRUCTION & DETAILS	DRAWING
658-C317-01	MASTS	DRAWING
658-C320-01	TANK DETAILS	DRAWING
658-C325-01	SEA CHEST CONSTRUCTION & DETAILS	DRAWING
658-C326-01	TRANSDUCER WELL CONSTRUCTION	DRAWING
658-C330-01	FOUNDATIONS	DRAWING
658-C399-01	DESIGN COMPENDIUM	CALCULATIONS
658-C406-01	PAINT SCHEDULE	DRAWING
658-C410-01	HULL OUTFITTING	DRAWING

658-C410-02		TOWKNEE CONSTRUCTION	DRAWING
658-C415-01		DOORS, WINDOWS, HATCHES & MANHOLES SCHEDULE	DRAWING
658-C420-01		DECK FITTINGS	DRAWING
658-C425-01		WALKWAYS, RAILINGS, GRATINGS & FLOOR PLATES	DRAWING
658-C427-01		VERTICAL & INCLINED LADDERS	DRAWING
658-C430-01		DECK COVERINGS	DRAWING
658-C435-01		JOINER WORK	DRAWING
658-C436-01		INSULATION & SHEATHING	DRAWING
658-C437-01		FURNITURE & FURNISHINGS	DRAWING
658-C445-01		LIFESAVING & SAFETY	DRAWING
658-C460-01		NAMEPLATES, NOTICES & MARKINGS	DRAWING
658-C480-01		TELEVISION ANTENNA SYSTEM SCHEMATIC	DRAWING
658-C605-01		PROPULSION CONTROL SYSTEM SCHEMATIC	DRAWING
658-C606-01		PROPELLER & NOZZLE	DRAWING
658-C610-01		SHAFTING ARRANGEMENT & INSTALLATION DETAILS	DRAWING
658-C612-01		STEERING RUDDER DETAILS & ARRANGEMENT	DRAWING
658-C612-02		FLANKING RUDDER DETAILS & ARRANGEMENT	DRAWING
658-C615-01		STEERING SYSTEM	DRAWING
658-C630-01		FUEL OIL SYSTEM	DRAWING
658-C635-01		LUBE OIL SYSTEM	DRAWING
658-C636-01		WASTE OIL SYSTEM	DRAWING
658-C637-01		OILY WATER SYSTEM	DRAWING
658-C640-01		COOLING WATER SYSTEM	DRAWING
658-C650-01		EXHAUST SYSTEMS	DRAWING
658-C660-01		BILGE & BALLAST SYSTEMS	DRAWING
658-C667-01		SANITARY, SEWAGE & GREYWATER SYS	DRAWING
658-C669-01		DRAINAGE SYSTEMS	DRAWING
658-C670-01		VENTS, SOUNDS & OVERFLOWS	DRAWING
658-C675-01		FIRE MAIN SYSTEM	DRAWING
658-C677-01		FIXED FIRE EXTINGUISHING SYSTEM	DRAWING
658-C678-01		FIRE DETECTION & ALARM SYSTEM	DRAWING
658-C679-01	*	FIRE CONTROL PLAN	DRAWING
658-C685-01		HEATING, VENTILATION & AIR CONDITIONING SYSTEM	DRAWING
658-C685-02		ENGINE ROOM HEATING & VENTILATION	DRAWING

658-C685-03	HVAC SYSTEM CALCULATIONS	CALCULATIONS
658-C690-01	COMPRESSED AIR SYSTEM	DRAWING
658-C692-01	GENERAL ALARM SYSTEM	DRAWING
658-C692-02	BILGE ALARM SYSTEM SCHEMATIC	DRAWING
658-C692-03	MISCELLANEOUS ALARM SCHEMATIC	DRAWING
658-C710-01	AC SYSTEM LOAD ANALYSIS	DRAWING
658-C710-02	DC SYSTEM LOAD ANALYSIS	DRAWING
658-C715-01	FAULT CURRENT ANALYSIS	CALCULATIONS
658-C720-01	ONE LINE DIAGRAM (AC & DC)	DRAWING
658-C725-01	CABLE SCHEDULE & VOLTAGE DROP ANALYSIS	DRAWING
658-C730-01	LIGHTING AND RECEPTACLE PLAN	DRAWING
658-C740-01	SWITCHGEAR	DRAWING
658-C760-01	SHORE & OFF-VESSEL POWER DETAILS	DRAWING
658-C765-01	TELEPHONE & DATA COMMUNICATIONS SYSTEM SCHEMATIC	DRAWING
658-C770-01	NAVIGATION EQUIPMENT	DRAWING
658-C780-01	GENERAL ALARM SYSTEM	DRAWING
658-C780-02	BILGE ALARM SYSTEM SCHEMATIC	DRAWING
658-C780-03	MISCELLANEOUS ALARM SCHEMATIC	DRAWING
658-C780-04	CO MONITORING & ALARM SYSTEM	DRAWING

CLIN 0004

622-C000-01	TITLE SHEET	DRAWING
622-C000-02 *	DRAWING INDEX	DRAWING
622-C105-01	LINES PLAN	DRAWING
622-C105-02	FRAMES & OFFSETS	DRAWING
622-C115-01	WEIGHT ESTIMATE	CALCULATIONS
622-C115-02	DECKHOUSE WEIGHT ESTIMATE	CALCULATIONS
622-C115-03	INCLINING EXPERIMENT & DEADWEIGHT SURVEY	REPORT
622-C130-01	TANK CAPACITY PLAN	DRAWING
622-C130-02 *	SOUNDING TABLES	TABLES
622-C145-01	TONNAGE MEASUREMENT DIAGRAM	DRAWING
622-C150-01	DAMAGE STABILITY	CALCULATIONS
622-C155-01	INTACT STABILITY	CALCULATIONS
622-C170-01	DRY DOCKING PLAN	DRAWING
622-C180-01	NOISE STUDY	REPORT
622-C205-01	OUTBOARD PROFILE	DRAWING
622-C215-01	GENERAL ARRANGEMENTS	DRAWING
622-C233-01	PILOTHOUSE ARRANGEMENT & DETAILS	DRAWING

622-C245-01	HOLD & MACHINERY ARRANGEMENTS	DRAWING
622-C255-01 *	CONSOLE ARRANGEMENTS	DRAWING
622-C301-01	MIDSHIP SECTION	DRAWING
622-C301-02	INBOARD PROFILE	DRAWING
622-C305-01	LONGITUDINAL STRUCTURE	DRAWING
622-C305-02	TRANSVERSE FRAMING & DETAILS	DRAWING
622-C307-01	DECK & BOTTOM STRUCTURE	DRAWING
622-C307-02	SIDE SHELL STRUCTURE	DRAWING
622-C309-01	TRANSVERSE BULKHEADS	DRAWING
622-C313-01	FLOATING DECKHOUSE DESIGN	DRAWING
622-C313-02	ISOLATOR SELECTION & FOUNDATION CALCULATIONS	CALCULATIONS
622-C315-01	DECKHOUSE STRUCTURE	DRAWING
622-C316-01	STACK CONSTRUCTION & DETAILS	DRAWING
622-C317-01	MASTS	DRAWING
622-C320-01	TANK DETAILS	DRAWING
622-C325-01	SEA CHEST CONSTRUCTION & DETAILS	DRAWING
622-C326-01	TRANSDUCER WELL CONSTRUCTION	DRAWING
622-C330-01	FOUNDATIONS	DRAWING
622-C399-01	DESIGN COMPENDIUM	CALCULATIONS
622-C406-01	PAINT SCHEDULE	DRAWING
622-C410-01	HULL OUTFITTING	DRAWING
622-C410-02	TOWKNEE CONSTRUCTION	DRAWING
622-C415-01	DOORS, WINDOWS, HATCHES & MANHOLES SCHEDULE	DRAWING
622-C420-01	DECK FITTINGS	DRAWING
622-C425-01	WALKWAYS, RAILINGS, GRATINGS & FLOOR PLATES	DRAWING
622-C427-01	VERTICAL & INCLINED LADDERS	DRAWING
622-C430-01	DECK COVERINGS	DRAWING
622-C435-01	JOINER WORK	DRAWING
622-C436-01	INSULATION & SHEATHING	DRAWING
622-C437-01	FURNITURE & FURNISHINGS	DRAWING
622-C445-01	LIFESAVING & SAFETY	DRAWING
622-C460-01	NAMEPLATES, NOTICES & MARKINGS	DRAWING
622-C480-01	TELEVISION ANTENNA SYSTEM SCHEMATIC	DRAWING
622-C605-01	PROPULSION CONTROL SYSTEM SCHEMATIC	DRAWING
622-C606-01	PROPELLER & NOZZLE	DRAWING
622-C610-01	SHAFTING ARRANGEMENT & INSTALLATION DETAILS	DRAWING

622-C612-01		STEERING RUDDER DETAILS & ARRANGEMENT	DRAWING
622-C612-02		FLANKING RUDDER DETAILS & ARRANGEMENT	DRAWING
622-C615-01		STEERING SYSTEM	DRAWING
622-C630-01		FUEL OIL SYSTEM	DRAWING
622-C635-01		LUBE OIL SYSTEM	DRAWING
622-C636-01		WASTE OIL SYSTEM	DRAWING
622-C637-01		OILY WATER SYSTEM	DRAWING
622-C640-01		COOLING WATER SYSTEM	DRAWING
622-C650-01		EXHAUST SYSTEMS	DRAWING
622-C660-01		BILGE & BALLAST SYSTEMS	DRAWING
622-C667-01		SANITARY, SEWAGE & GREYWATER SYS	DRAWING
622-C669-01		DRAINAGE SYSTEMS	DRAWING
622-C670-01		VENTS, SOUNDS & OVERFLOWS	DRAWING
622-C675-01		FIRE MAIN SYSTEM	DRAWING
622-C677-01		FIXED FIRE EXTINGUISHING SYSTEM	DRAWING
622-C678-01		FIRE DETECTION & ALARM SYSTEM	DRAWING
622-C679-01	*	FIRE CONTROL PLAN	DRAWING
622-C685-01		HEATING, VENTILATION & AIR CONDITIONING SYSTEM	DRAWING
622-C685-02		ENGINE ROOM HEATING & VENTILATION	DRAWING
622-C685-03		HVAC SYSTEM CALCULATIONS	CALCULATIONS
622-C690-01		COMPRESSED AIR SYSTEM	DRAWING
622-C692-01		GENERAL ALARM SYSTEM	DRAWING
622-C692-02		BILGE ALARM SYSTEM SCHEMATIC	DRAWING
622-C692-03		MISCELLANEOUS ALARM SCHEMATIC	DRAWING
622-C710-01		AC SYSTEM LOAD ANALYSIS	DRAWING
622-C710-02		DC SYSTEM LOAD ANALYSIS	DRAWING
622-C715-01		FAULT CURRENT ANALYSIS	CALCULATIONS
622-C720-01		ONE LINE DIAGRAM (AC & DC)	DRAWING
622-C725-01		CABLE SCHEDULE & VOLTAGE DROP ANALYSIS	DRAWING
622-C730-01		LIGHTING AND RECEPTACLE PLAN	DRAWING
622-C740-01		SWITCHGEAR	DRAWING
622-C760-01		SHORE & OFF-VESSEL POWER DETAILS	DRAWING
622-C765-01		TELEPHONE & DATA COMMUNICATIONS SYSTEM SCHEMATIC	DRAWING
622-C770-01		NAVIGATION EQUIPMENT	DRAWING
622-C780-01		GENERAL ALARM SYSTEM	DRAWING
622-C780-02		BILGE ALARM SYSTEM SCHEMATIC	DRAWING
622-C780-03		MISCELLANEOUS ALARM SCHEMATIC	DRAWING

* To be developed during the "CONSTRUCT, TEST & DELIVER" phase of the Contract.

H14 "AS-BUILT" DRAWINGS

In order to provide a record of each "As-Built" vessel the Contractor shall update the FINAL DESIGN drawings, calculations, reports, and documents to clearly show the construction, details and systems of each vessel at the time of its delivery.

All of the drawings, reports and documents shown on the Submittal Schedule required by Clause H11 and the Drawing Index required by Clause H12 will be updated and corrected to form an "As-Built" record of each vessel.

The "As-Built" materials for each vessel shall be delivered as follows:

o Prior to FINAL INSPECTION, the Contractor shall submit one set of prints of the "As-Built" drawings for review and approval.

o Prior to PROVISIONAL ACCEPTANCE, the Contractor shall provide the following:

- Two sets of black or blue line prints of all "As-Built" drawings.
- One set of high quality (original) Mylar reproducibles of all "As-Built" drawings.
- Two sets of 35 mm "Silver" microfilms of the "As-Built" drawings mounted on MDC Standard aperture cards (cards will be furnished by the COR upon request by the Contractor).
- Two sets of electronic files of all calculations and reports. The files shall be provided on 4-3/4 650 MB 74 min digital compact disk (CD) in Adobe Acrobat "*.pdf" file format. Each set of calculations or complete report shall be a separate electronic file with a filename which conforms to the file naming convention below. Compression utilities such as PKZIP® may not be used.
- Two sets of electronic files of all CADD prepared drawings. The files shall be provided on 4-3/4 650 MB 74 min digital compact disk(CD) in AutoCAD R14 dwg file format or higher. Each drawing sheet shall be a separate electronic file with a filename which conforms to the file naming convention below. Compression utilities such as

PKZIP® may not be used.

Each complete set of files on CD shall be labeled, indexed in numerical order by filename furnished in protective plastic sleeves and on the CD cover sheet.

Files furnished on CD shall be encased in standard plastic jewel boxes. Slim line jewel cases will not be acceptable.

Filenames: Drawing files shall be named based on the drawing phase, WBS number, task number, sheet number, and revision number. The following example will illustrate the naming convention:

● For the third sheet of a multi-sheet drawing with a drawing number of 556-A720-02 and a revision of "C" the drawing filename would be A720023C.

The direct relationship between the drawing number and the drawing filename is as follows:

	Drawing Number	Drawing Filename
Design Phase	The fourth character, A in the example.	The first character, A.
WBS Indicator	The fifth through seventh characters, 720 in the example.	The second through fourth characters, 720.
Task Number	The eighth and ninth characters, 02 in the example.	The fifth and sixth characters, 02.
Sheet Number	The tenth character, 3 in the example.	The seventh character, 3.
Revision Indicator	The eleventh character, C in the example.	The eighth character, C.

File Extension .DWG

==========

Dwg. Number	A 720 - 02	Sheet 3	Revision C
Dwg. Filename	A 720 02	3	C .DWG

The Government shall have unlimited use of the drawings listed on the drawing index for repair and maintenance purposes only.

H15 SUBSTITUTIONS

"Substitution" as used in this clause, is an administrative action, not resulting in a contract change of cost or time.

Prior to issuance of a NTP with "Construct, Test and Deliver," the Contractor shall prepare and submit a comprehensive list and analysis of any Contractor proposed substitutions of the equipment and materials required in the contract.

The Substitution List shall be limited to equipment and materials specifically required by the contract. Equipment and Materials where the contractor has selection responsibility (i.e. "similar to") are not to be included in the list.

Each proposed substitution shall be accompanied with a detailed analysis and comparison of the equipment or materials specified and the equipment or materials proposed, including features, dimensions, performance characteristics, benefit to the Government, and the compelling reason why the substitution should be made. In the absence of compelling reasons for making the substitution, the contractor's proposal may be denied.

Should the substitution be accepted, the Contractor shall be responsible for integrating the substitution into the design at no increase in contract cost or no extension of contract completion. Such modifications to the design must be completed, submitted for approval, revised as necessary and accepted by the COR prior to issuing a NTP with Construct, Test and Deliver.

The Contractor bears ultimate responsibility for satisfactory performance of all systems impacted or affected by an accepted substitution as well as the operation of each completed vessel, as affected by the substitution.

Once a NTP with Construct, Test and Deliver has been issued, substitutions will not be considered.

H16 MANUFACTURER OR SUBCONTRACTOR DRAWINGS AND MANUALS

For each vessel, the Contractor shall provide three complete sets of drawings and manuals for each piece of machinery and equipment provided by the Contractor; that clearly describe the operation, construction, maintenance, repair, adjustment, lubrication, parts lists and "trouble shooting" of every item of machinery and equipment. This shall include Detailed Fabrication Drawings where they exist.

Manuals shall be in the English language with all dimensions in the foot-pound-second systems of units. Manuals shall be no larger than 8 inches x 11 inches, and bound in hard covers of durable materials.

Manufacturer's or subcontractor's drawings may be included in the manual but must be folded to page size.

Drawings not suitable for inclusion in the manuals must be considered as engineering and design drawings and shall be prepared and submitted in accordance with the requirements of Clause H13, ENGINEERING AND DRAWINGS.

At least 30 days prior to FINAL INSPECTION of each vessel, one set of the manuals shall be submitted to the Contracting Officer's Representative for review, comment and/or approval. This set of manuals will be returned to the Contractor with approval or comments.

Final submittal of the manuals shall consist of three sets of the manuals and must be completed prior to PROVISIONAL ACCEPTANCE of each vessel.

If photocopies (Xerox or similar) of parts lists, text, diagrams, etc., are furnished, one of the sets shall be a "Master" and must be made up of all "original" sheets and be clearly identified as the "Master" copy. Photocopies will be clear with high black/white contrast, sharp lines, full sheet reproduction, and no background shadow or clutter.

Where catalog "cut-sheets" are provided, all information not pertinent to the equipment or machinery provided shall be obliterated.

H17 OPERATOR'S MANUAL

The Contractor shall prepare and furnish an Operator's Manual customized for each vessel, which is intended to be a guide to the operation, maintenance, and utilization of the various systems on the vessel and the vessel itself.

The manual shall be arranged such that an operator can get a quick overview and understanding of a system and its operation, with specific steps and guidelines to clearly affect system actuation, control and shutdown.

The manual shall also include specific maintenance instructions for each system, and item of equipment.

The manual shall contain simplified and reduced size arrangement and schematic and/or diagrammatic-on-arrangement drawings of each vessel system.

The manual shall be bound in hard cover binders of a durable material.

Three copies of the manual shall be provided prior to Final Acceptance of each vessel. One copy shall be the "Master" copy and shall contain the original typed or reproducible version of the manual. An electronic copy of the "Master" shall be provided.

H18 RECORD PHOTOGRAPHS

A. CONSTRUCTION PROGRESS PHOTOGRAPHS

The Contractor shall provide monthly photographs deliverable in digital format. The photographs shall document the construction progress, the launching, and tests and trials of each vessel.

The photographs shall be provided via e-mail. Photographs shall be JPG file format of at least SVGA Resolution, 24-bit color depth, and at a compression ratio no greater than 25% (75% Quality).

For each vessel, approximately 15-20 photographs shall be provided monthly. The quantity of photographs shall be commensurate with the level of production.

B. FINAL PHOTOGRAPHS

1. Digital Photography Requirements

For each vessel, a minimum of 50 different digital photograph interior shots showing all deckhouse and machinery spaces shall be provided by the Contractor. The interior shots shall be taken from different angles in each space to show the equipment arrangement and space layout. The digital photograph files for each vessel shall be provided on 4-3/4 650 MB 74 min digital compact disk(CD), 2 complete copies shall be provided to the Government. Individual sets shall be supplied for each vessel.

2. Color Film Photography Requirements

The Contractor shall furnish the services of a professional photographer to take regular color photographs of each completed vessel.

For each vessel, a minimum of 10 different exterior photographs, using color photograph film, shall be taken to include:

a. Profile view of each side
b. Profile view of each end
c. Profile views of each vessel corner
d. Plan or overhead view of the vessel

For each vessel, the Contractor shall provide one negative and ten prints for each of two exterior shots, which will be selected by the COR upon review of shipyard exterior photos. Color prints shall be 8-inch x 10-inch. (Total of 20 prints).

For each vessel, the COR shall select two shots from the exterior view photos, which shall be custom printed in 11 x 14 size, professionally mounted, double matted and framed under clear glass in suitable wooden frame. Two sets of each picture shall be furnished to the Contracting Officer's Representative (total of four matted and framed photos), for each vessel.

H19 GOVERNMENT PROPERTY

All Government-Furnished equipment and equipment for which the Government has made payment or partial payment shall be considered Government Property.

The Contractor shall accept all risk for Government property in his possession.

The Contractor shall maintain an inventory of all Government Property, update and submit the inventory monthly.

All Government Property shall be stored in enclosed, weather tight secure, warehouse buildings. Security shall consist of restricted access, locked and fenced storage. Warehouse buildings shall be heated above freezing and ventilated to prevent condensation or sweating.

H20 PROGRESS PAYMENT BASED ON PERCENTAGE OR STAGE OF COMPLETION

The Government shall pay the Contractor the contract price as provided in this contract.

The Government shall make progress payments monthly as the work proceeds, or at more frequent intervals as determined by the Contracting Officer, on estimates of work accomplished which meets standards of quality established under the contract, as accepted by the Contracting Officer. If requested by the Contracting Officer, the Contractor shall furnish a breakdown of the total contract price showing the amount included therein for each principal category of work, in such detail as requested, to provide a basis for determining progress payments. In the preparation of estimates, the Contracting Officer may authorize payment for material delivered to the site and at locations other than the site may also be taken into consideration if---

- Consideration is specifically authorized by this contract; and
- The Contractor furnishes satisfactory evidence that it has acquired title to such material and that the material will be used to perform this contract.

If the Contracting Officer finds that satisfactory progress was achieved during any period for which progress payment is to be made, the Contracting Officer shall authorize payment to be made in full. However, if satisfactory progress has not been made, the Contracting Officer may retain a maximum of fifteen percent (15%) of the amount of the payment until satisfactory progress is achieved. When the work is substantially complete, the Contracting Officer may retain from previously withheld funds and future progress payments that amount the Contracting Officer considers adequate for protection of the Government and shall release to the Contractor all remaining withheld funds.

All material and work covered by progress payments made shall, at the time of payment, become the sole property of the Government, but this shall not be considered as---

- Relieving the Contractor from the sole responsibility for all material and work upon which payments have been made or the restoration of any damaged work; or
- Waiving the right of the Government to require the fulfillment of all of the terms of the contract.

In making these progress payments, the Government shall, upon request, reimburse the Contractor for the amount of premiums paid for performance and payment bonds (including co-insurance and reinsurance agreements, when applicable) after the Contractor has furnished evidence of full payment to the surety. The retainage provision preceding shall not apply to that portion of progress payments attributed to bond premiums.

The Government shall pay the amount due the Contractor under this contract after---

- Completion and acceptance of all work; and
- Presentation of a properly executed voucher.

Notwithstanding any other provision of this contract, progress payments shall not exceed eighty percent (80%) on work accomplished on undefinitized contract actions. A "contract action" is any action resulting in a contract as defined in FAR Subpart 2.1, including contract modifications for additional supplies or services, but not including contract modifications that are within the scope and under the terms of the contract, such as contract modifications issued pursuant to the Changes Clause, or funding and other administrative changes.

SECTION I Contract Clauses

CLAUSES INCORPORATED BY FULL TEXT

52.202-1 DEFINITIONS. (DEC 2001)

(a) Agency head or head of the agency means the Secretary (Attorney General, Administrator, Governor, Chairperson, or other chief official, as appropriate) of the agency, unless otherwise indicated, including any deputy or assistant chief official of the executive agency.

(b) Commercial component means any component that is a commercial item.

(c) Commercial item means--

(1) Any item, other than real property, that is of a type customarily used by the public or by non-governmental entities for purposes other than governmental purposes, and that--

(i) Has been sold, leased, or licensed to the general public; or

(ii) Has been offered for sale, lease, or license to the general public;

(2) Any item that evolved from an item described in paragraph (c)(1) of this clause through advances in technology or performance and that is not yet available in the commercial marketplace, but will be available in the commercial marketplace in time to satisfy the delivery requirements under a Government solicitation;

(3) Any item that would satisfy a criterion expressed in paragraphs (c)(1) or (c)(2) of this clause, but for--

(i) Modifications of a type customarily available in the commercial marketplace; or

(ii) Minor modifications of a type not customarily available in the commercial marketplace made to meet Federal Government requirements. “Minor” modifications means modifications that do not significantly alter the nongovernmental function or essential physical characteristics of an item or component, or change the purpose of a process. Factors to be considered in determining whether a modification is minor include the value and size of the modification and the comparative value and size of the final product. Dollar values and percentages may be used as guideposts, but are not conclusive evidence that a modification is minor;

(4) Any combination of items meeting the requirements of paragraphs (c)(1), (2), (3), or (5) of this clause that are of a type customarily combined and sold in combination to the general public;

(5) Installation services, maintenance services, repair services, training services, and other services if--

(i) Such services are procured for support of an item referred to in paragraph (c)(1), (2), (3), or (4) of this definition, regardless of whether such services are provided by the same source or at the same time as the item; and

(ii) The source of such services provides similar services contemporaneously to the general public under terms and conditions similar to those offered to the Federal Government;

(6) Services of a type offered and sold competitively in substantial quantities in the commercial marketplace based on established catalog or market prices for specific tasks performed under standard commercial terms and conditions. This does not include services that are sold based on hourly rates without an established catalog or market price for a specific service performed. For purposes of these services--

(i) Catalog price means a price included in a catalog, price list, schedule, or other form that is regularly maintained by the manufacturer or vendor, is either published or otherwise available for inspection by customers, and states prices at which sales are currently, or were last, made to a significant number of buyers constituting the general public; and

(ii) Market prices means current prices that are established in the course of ordinary trade between buyers and sellers free to bargain and that can be substantiated through competition or from sources independent of the offerors.

(7) Any item, combination of items, or service referred to in subparagraphs (c)(1) through (c)(6), notwithstanding the fact that the item, combination of items, or service is transferred between or among separate divisions, subsidiaries, or affiliates of a Contractor; or

(8) A nondevelopmental item, if the procuring agency determines the item was developed exclusively at private expense and sold in substantial quantities, on a competitive basis, to multiple State and local Governments.

(d) Component means any item supplied to the Government as part of an end item or of another component, except that for use in 52.225-9, and 52.225-11 see the definitions in 52.225-9(a) and 52.225-11(a).

(e) Contracting Officer means a person with the authority to enter into, administer, and/or terminate contracts and make related determinations and findings. The term includes certain authorized representatives of the Contracting Officer acting within the limits of their authority as delegated by the Contracting Officer.

(f) Nondevelopmental item means--

(1) Any previously developed item of supply used exclusively for governmental purposes by a Federal agency, a State or local government, or a foreign government with which the United States has a mutual defense cooperation agreement;

(2) Any item described in paragraph (f)(1) of this definition that requires only minor modification or modifications of a type customarily available in the commercial marketplace in order to meet the requirements of the procuring department or agency; or

(3) Any item of supply being produced that does not meet the requirements of paragraph (f)(1) or (f)(2) solely because the item is not yet in use.

(g) Except as otherwise provided in this contract, the term "subcontracts" includes, but is not limited to, purchase orders and changes and modifications to purchase orders under this contract.

(End of clause)

52.203-3 GRATUITIES (APR 1984)

(a) The right of the Contractor to proceed may be terminated by written notice if, after notice and hearing, the agency head or a designee determines that the Contractor, its agent, or another representative--

(1) Offered or gave a gratuity (e.g., an entertainment or gift) to an officer, official, or employee of the Government; and

(2) Intended, by the gratuity, to obtain a contract or favorable treatment under a contract.

(b) The facts supporting this determination may be reviewed by any court having lawful jurisdiction.

(c) If this contract is terminated under paragraph (a) of this clause, the Government is entitled--

(1) To pursue the same remedies as in a breach of the contract; and

(2) In addition to any other damages provided by law, to exemplary damages of not less than 3 nor more than 10 times the cost incurred by the Contractor in giving gratuities to the person concerned, as determined by the agency head or a designee. (This subparagraph (c)(2) is applicable only if this contract uses money appropriated to the Department of Defense.)

(d) The rights and remedies of the Government provided in this clause shall not be exclusive and are in addition to any other rights and remedies provided by law or under this contract.

(End of clause)

52.203-5 COVENANT AGAINST CONTINGENT FEES (APR 1984)

(a) The Contractor warrants that no person or agency has been employed or retained to solicit or obtain this contract upon an agreement or understanding for a contingent fee, except a bona fide employee or agency. For breach or violation of this warranty, the Government shall have the right to annul this contract without liability or, in its discretion, to deduct from the contract price

or consideration, or otherwise recover, the full amount of the contingent fee.

(b) "Bona fide agency," as used in this clause, means an established commercial or selling agency, maintained by a contractor for the purpose of securing business, that neither exerts nor proposes to exert improper influence to solicit or obtain Government contracts nor holds itself out as being able to obtain any Government contract or contracts through improper influence.

"Bona fide employee," as used in this clause, means a person, employed by a contractor and subject to the contractor's supervision and control as to time, place, and manner of performance, who neither exerts nor proposes to exert improper influence to solicit or obtain Government contracts nor holds out as being able to obtain any Government contract or contracts through improper influence.

"Contingent fee," as used in this clause, means any commission, percentage, brokerage, or other fee that is contingent upon the success that a person or concern has in securing a Government contract.

"Improper influence," as used in this clause, means any influence that induces or tends to induce a Government employee or officer to give consideration or to act regarding a Government contract on any basis other than the merits of the matter.

(End of clause)

52.203-6 RESTRICTIONS ON SUBCONTRACTOR SALES TO THE GOVERNMENT (JUL 1995)

(a) Except as provided in (b) of this clause, the Contractor shall not enter into any agreement with an actual or prospective subcontractor, nor otherwise act in any manner, which has or may have the effect of restricting sales by such subcontractors directly to the Government of any item or process (including computer software) made or furnished by the subcontractor under this contract or under any follow-on production contract.

(b) The prohibition in (a) of this clause does not preclude the Contractor from asserting rights that are otherwise authorized by law or regulation.

(c) The Contractor agrees to incorporate the substance of this clause, including this paragraph (c), in all subcontracts under this contract which exceed $100,000.

(End of clause)

52.203-7 ANTI-KICKBACK PROCEDURES. (JUL 1995)

(a) Definitions.

"Kickback," as used in this clause, means any money, fee, commission, credit, gift, gratuity,

thing of value, or compensation of any kind which is provided, directly or indirectly, to any prime Contractor, prime Contractor employee, subcontractor, or subcontractor employee for the purpose of improperly obtaining or rewarding favorable treatment in connection with a prime contract or in connection with a subcontract relating to a prime contract.

"Person," as used in this clause, means a corporation, partnership, business association of any kind, trust, joint-stock company, or individual.

"Prime contract," as used in this clause, means a contract or contractual action entered into by the United States for the purpose of obtaining supplies, materials, equipment, or services of any kind.

"Prime Contractor," as used in this clause, means a person who has entered into a prime contract with the United States.

"Prime Contractor employee," as used in this clause, means any officer, partner, employee, or agent of a prime Contractor.

"Subcontract," as used in this clause, means a contract or contractual action entered into by a prime Contractor or subcontractor for the purpose of obtaining supplies, materials, equipment, or services of any kind under a prime contract.

"Subcontractor," as used in this clause, (1) means any person, other than the prime Contractor, who offers to furnish or furnishes any supplies, materials, equipment, or services of any kind under a prime contract or a subcontract entered into in connection with such prime contract, and (2) includes any person who offers to furnish or furnishes general supplies to the prime Contractor or a higher tier subcontractor.

"Subcontractor employee," as used in this clause, means any officer, partner, employee, or agent of a subcontractor.

(b) The Anti-Kickback Act of 1986 (41 U.S.C. 51-58) (the Act), prohibits any person from -

(1) Providing or attempting to provide or offering to provide any kickback;

(2) Soliciting, accepting, or attempting to accept any kickback; or

(3) Including, directly or indirectly, the amount of any kickback in the contract price charged by a prime Contractor to the United States or in the contract price charged by a subcontractor to a prime Contractor or higher tier subcontractor.

(c)(1) The Contractor shall have in place and follow reasonable procedures designed to prevent and detect possible violations described in paragraph (b) of this clause in its own operations and direct business relationships.

(2) When the Contractor has reasonable grounds to believe that a violation described in paragraph (b) of this clause may have occurred, the Contractor shall promptly report in writing the possible violation. Such reports shall be made to the inspector general of the contracting agency, the head of the contracting agency if the agency does not have an inspector general, or the Department of Justice.

(3) The Contractor shall cooperate fully with any Federal agency investigating a possible violation described in paragraph (b) of this clause.

(4) The Contracting Officer may (i) offset the amount of the kickback against any monies owed by the United States under the prime contract and/or (ii) direct that the Prime Contractor withhold, from sums owed a subcontractor under the prime contract, the amount of any kickback. The Contracting Officer may order the monies withheld under subdivision (c)(4)(ii) of this clause be paid over to the Government unless the Government has already offset those monies under subdivision (c)(4)(i) of this clause. In either case, the Prime Contractor shall notify the Contracting Officer when the monies are withheld.

(5) The Contractor agrees to incorporate the substance of this clause, including this subparagraph (c)(5) but excepting subparagraph (c)(1), in all subcontracts under this contract which exceed $100,000.

(End of clause)

52.203-8 CANCELLATION, RESCISSION, AND RECOVERY OF FUNDS FOR ILLEGAL OR IMPROPER ACTIVITY (JAN 1997)

(a) If the Government receives information that a contractor or a person has engaged in conduct constituting a violation of subsection (a), (b), (c), or (d) of Section 27 of the Office of Federal Procurement Policy Act (41 U.S.C. 423) (the Act), as amended by section 4304 of the 1996 National Defense Authorization Act for Fiscal Year 1996 (Pub. L. 104-106), the Government may--

(1) Cancel the solicitation, if the contract has not yet been awarded or issued; or

(2) Rescind the contract with respect to which--

(i) The Contractor or someone acting for the Contractor has been convicted for an offense where the conduct constitutes a violation of subsection 27(a) or (b) of the Act for the purpose of either--

(A) Exchanging the information covered by such subsections for anything of value; or

(B) Obtaining or giving anyone a competitive advantage in the award of a Federal agency procurement contract; or

(ii) The head of the contracting activity has determined, based upon a preponderance of the evidence, that the Contractor or someone acting for the Contractor has engaged in conduct constituting an offense punishable under subsections 27(e)(1) of the Act.

(b) If the Government rescinds the contract under paragraph (a) of this clause, the Government is entitled to recover, in addition to any penalty prescribed by law, the amount expended under the contract.

(c) The rights and remedies of the Government specified herein are not exclusive, and are in addition to any other rights and remedies provided by law, regulation, or under this contract.

(End of clause)

52.203-10 PRICE OR FEE ADJUSTMENT FOR ILLEGAL OR IMPROPER ACTIVITY (JAN 1997)

(a) The Government, at its election, may reduce the price of a fixed-price type contract and the total cost and fee under a cost-type contract by the amount of profit or fee determined as set forth in paragraph (b) of this clause if the head of the contracting activity or designee determines that there was a violation of subsection 27 (a), (b), or (c) of the Office of Federal Procurement Policy Act, as amended (41 U.S.C. 423), as implemented in section 3.104 of the Federal Acquisition Regulation.

(b) The price or fee reduction referred to in paragraph (a) of this clause shall be--

(1) For cost-plus-fixed-fee contracts, the amount of the fee specified in the contract at the time of award;

(2) For cost-plus-incentive-fee contracts, the target fee specified in the contract at the time of award, notwithstanding any minimum fee or "fee floor" specified in the contract;

(3) For cost-plus-award-fee contracts--

(i) The base fee established in the contract at the time of contract award;

(ii) If no base fee is specified in the contract, 30 percent of the amount of each award fee otherwise payable to the Contractor for each award fee evaluation period or at each award fee determination point.

(4) For fixed-price-incentive contracts, the Government may--

(i) Reduce the contract target price and contract target profit both by an amount equal to the initial target profit specified in the contract at the time of contract award; or

(ii) If an immediate adjustment to the contract target price and contract target profit would have a significant adverse impact on the incentive price revision relationship under the contract, or adversely affect the contract financing provisions, the Contracting Officer may defer such adjustment until establishment of the total final price of the contract. The total final price established in accordance with the incentive price revision provisions of the contract shall be reduced by an amount equal to the initial target profit specified in the contract at the time of contract award and such reduced price shall be the total final contract price.

(5) For firm-fixed-price contracts, by 10 percent of the initial contract price or a profit amount determined by the Contracting Officer from records or documents in existence prior to the date of the contract award.

(c) The Government may, at its election, reduce a prime contractor's price or fee in accordance with the procedures of paragraph (b) of this clause for violations of the Act by its subcontractors by an amount not to exceed the amount of profit or fee reflected in the subcontract at the time the subcontract was first definitively priced.

(d) In addition to the remedies in paragraphs (a) and (c) of this clause, the Government may terminate this contract for default. The rights and remedies of the Government specified herein are not exclusive, and are in addition to any other rights and remedies provided by law or under this contract.

(End of clause)

52.203-12 LIMITATION ON PAYMENTS TO INFLUENCE CERTAIN FEDERAL TRANSACTIONS (JUN 1997)

(a) Definitions.

"Agency," as used in this clause, means executive agency as defined in 2.101.

"Covered Federal action," as used in this clause, means any of the following Federal actions:

(1) The awarding of any Federal contract.

(2) The making of any Federal grant.

(3) The making of any Federal loan.

(4) The entering into of any cooperative agreement.

(5) The extension, continuation, renewal, amendment, or modification of any Federal contract, grant, loan, or cooperative agreement.

"Indian tribe" and "tribal organization," as used in this clause, have the meaning provided in section 4 of the Indian Self-Determination and Education Assistance Act (25 U.S.C. 450B) and include Alaskan Natives.

"Influencing or attempting to influence," as used in this clause, means making, with the intent to influence, any communication to or appearance before an officer or employee of any agency, a Member of Congress, an officer or employee of Congress, or an employee of a Member of Congress in connection with any covered Federal action.

"Local government," as used in this clause, means a unit of government in a State and, if chartered, established, or otherwise recognized by a State for the performance of a governmental duty, including a local public authority, a special district, an intrastate district, a council of governments, a sponsor group representative organization, and any other instrumentality of a local government.

"Officer or employee of an agency," as used in this clause, includes the following individuals who are employed by an agency:

(1) An individual who is appointed to a position in the Government under Title 5, United States Code, including a position under a temporary appointment.

(2) A member of the uniformed services, as defined in subsection 101(3), Title 37, United States Code.

(3) A special Government employee, as defined in section 202, Title 18, United States Code.

(4) An individual who is a member of a Federal advisory committee, as defined by the Federal Advisory Committee Act, Title 5, United States Code, appendix 2.

"Person," as used in this clause, means an individual, corporation, company, association, authority, firm, partnership, society, State, and local government, regardless of whether such entity is operated for profit, or not for profit. This term excludes an Indian tribe, tribal organization, or any other Indian organization with respect to expenditures specifically permitted by other Federal law.

"Reasonable compensation," as used in this clause, means, with respect to a regularly employed officer or employee of any person, compensation that is consistent with the normal compensation for such officer or employee for work that is not furnished to, not funded by, or not furnished in cooperation with the Federal Government.

"Reasonable payment," as used in this clause, means, with respect to professional and other technical services, a payment in an amount that is consistent with the amount normally paid for such services in the private sector.

"Recipient," as used in this clause, includes the Contractor and all subcontractors. This term excludes an Indian tribe, tribal organization, or any other Indian organization with respect to expenditures specifically permitted by other Federal law.

"Regularly employed," as used in this clause, means, with respect to an officer or employee of a person requesting or receiving a Federal contract, an officer or employee who is employed by such person for at least 130 working days within 1 year immediately preceding the date of the submission that initiates agency consideration of such person for receipt of such contract. An officer or employee who is employed by such person for less than 130 working days within 1 year immediately preceding the date of the submission that initiates agency consideration of such person shall be considered to be regularly employed as soon as he or she is employed by such person for 130 working days.

"State," as used in this clause, means a State of the United States, the District of Columbia, the Commonwealth of Puerto Rico, a territory or possession of the United States, an agency or instrumentality of a State, and multi-State, regional, or interstate entity having governmental duties and powers.

(b) Prohibitions.

(1) Section 1352 of Title 31, United States Code, among other things, prohibits a recipient of a Federal contract, grant, loan, or cooperative agreement from using appropriated funds to pay any person for influencing or attempting to influence an officer or employee of any agency, a Member of Congress, an officer or employee of Congress, or an employee of a Member of Congress in connection with any of the following covered Federal actions: the awarding of any Federal contract; the making of any Federal grant; the making of any Federal loan; the entering into of any cooperative agreement; or the modification of any Federal contract, grant, loan, or cooperative agreement.

(2) The Act also requires Contractors to furnish a disclosure if any funds other than Federal appropriated funds (including profit or fee received under a covered Federal transaction) have been paid, or will be paid, to any person for influencing or attempting to influence an officer or employee of any agency, a Member of Congress, an officer or employee of Congress, or an employee of a Member of Congress in connection with a Federal contract, grant, loan, or cooperative agreement.

(3) The prohibitions of the Act do not apply under the following conditions:

(i) Agency and legislative liaison by own employees.

(A) The prohibition on the use of appropriated funds, in subparagraph (b)(1) of this clause, does not apply in the case of a payment of reasonable compensation made to an officer or employee of a person requesting or receiving a covered Federal action if the payment is for agency and legislative liaison activities not directly related to a covered Federal action.

(B) For purposes of subdivision (b)(3)(i)(A) of this clause, providing any information specifically requested by an agency or Congress is permitted at any time.

(C) The following agency and legislative liaison activities are permitted at any time where they are not related to a specific solicitation for any covered Federal action:

(1) Discussing with an agency the qualities and characteristics (including individual demonstrations) of the person's products or services, conditions or terms of sale, and service capabilities.

(2) Technical discussions and other activities regarding the application or adaptation of the person's products or services for an agency's use.

(D) The following agency and legislative liaison activities are permitted where they are prior to formal solicitation of any covered Federal action--

(1) Providing any information not specifically requested but necessary for an agency to make an informed decision about initiation of a covered Federal action;

(2) Technical discussions regarding the preparation of an unsolicited proposal prior to its official submission; and

(3) Capability presentations by persons seeking awards from an agency pursuant to the provisions of the Small Business Act, as amended by Pub. L. 95-507, and subsequent amendments.

(E) Only those services expressly authorized by subdivision (b)(3)(i)(A) of this clause are permitted under this clause.

(ii) Professional and technical services.

(A) The prohibition on the use of appropriated funds, in subparagraph (b)(1) of this clause, does not apply in the case of--

(1) A payment of reasonable compensation made to an officer or employee of a person requesting or receiving a covered Federal action or an extension, continuation, renewal, amendment, or modification of a covered Federal action, if payment is for professional or technical services rendered directly in the preparation, submission, or negotiation of any bid, proposal, or application for that Federal action or for meeting requirements imposed by or pursuant to law as a condition for receiving that Federal action.

(2) Any reasonable payment to a person, other than an officer or employee of a person requesting or receiving a covered Federal action or an extension, continuation, renewal, amendment, or modification of a covered Federal action if the payment is for professional or technical services rendered directly in the preparation, submission, or negotiation of any bid, proposal, or application for that Federal action or for meeting requirements imposed by or pursuant to law as

a condition for receiving that Federal action. Persons other than officers or employees of a person requesting or receiving a covered Federal action include consultants and trade associations.

(B) For purposes of subdivision (b)(3)(ii)(A) of this clause, "professional and technical services" shall be limited to advice and analysis directly applying any professional or technical discipline. For example, drafting of a legal document accompanying a bid or proposal by a lawyer is allowable. Similarly, technical advice provided by an engineer on the performance or operational capability of a piece of equipment rendered directly in the negotiation of a contract is allowable. However, communications with the intent to influence made by a professional (such as a licensed lawyer) or a technical person (such as a licensed accountant) are not allowable under this section unless they provide advice and analysis directly applying their professional or technical expertise and unless the advice or analysis is rendered directly and solely in the preparation, submission or negotiation of a covered Federal action. Thus, for example, communications with the intent to influence made by a lawyer that do not provide legal advice or analysis directly and solely related to the legal aspects of his or her client's proposal, but generally advocate one proposal over another are not allowable under this section because the lawyer is not providing professional legal services. Similarly, communications with the intent to influence made by an engineer providing an engineering analysis prior to the preparation or submission of a bid or proposal are not allowable under this section since the engineer is providing technical services but not directly in the preparation, submission or negotiation of a covered Federal action.

(C) Requirements imposed by or pursuant to law as a condition for receiving a covered Federal award include those required by law or regulation and any other requirements in the actual award documents.

(D) Only those services expressly authorized by subdivisions (b)(3)(ii)(A)(1) and (2) of this clause are permitted under this clause.

(E) The reporting requirements of FAR 3.803(a) shall not apply with respect to payments of reasonable compensation made to regularly employed officers or employees of a person.

(c) Disclosure.

(1) The Contractor who requests or receives from an agency a Federal contract shall file with that agency a disclosure form, OMB standard form LLL, Disclosure of Lobbying Activities, if such person has made or has agreed to make any payment using nonappropriated funds (to include profits from any covered Federal action), which would be prohibited under subparagraph (b)(1) of this clause, if paid for with appropriated funds.

(2) The Contractor shall file a disclosure form at the end of each calendar quarter in which there occurs any event that materially affects the accuracy of the information contained in any disclosure form previously filed by such person under subparagraph (c)(1) of this clause. An event that materially affects the accuracy of the information reported includes--

(i) A cumulative increase of $25,000 or more in the amount paid or expected to be paid for influencing or attempting to influence a covered Federal action; or

(ii) A change in the person(s) or individual(s) influencing or attempting to influence a covered Federal action; or

(iii) A change in the officer(s), employee(s), or Member(s) contacted to influence or attempt to influence a covered Federal action.

(3) The Contractor shall require the submittal of a certification, and if required, a disclosure form by any person who requests or receives any subcontract exceeding $100,000 under the Federal contract.

(4) All subcontractor disclosure forms (but not certifications) shall be forwarded from tier to tier until received by the prime Contractor. The prime Contractor shall submit all disclosures to the Contracting Officer at the end of the calendar quarter in which the disclosure form is submitted by the subcontractor. Each subcontractor certification shall be retained in the subcontract file of the awarding Contractor.

(d) Agreement. The Contractor agrees not to make any payment prohibited by this clause.

(e) Penalties.

(1) Any person who makes an expenditure prohibited under paragraph (a) of this clause or who fails to file or amend the disclosure form to be filed or amended by paragraph (b) of this clause shall be subject to civil penalties as provided for by 31 U.S.C. 1352. An imposition of a civil penalty does not prevent the Government from seeking any other remedy that may be applicable.

(2) Contractors may rely without liability on the representation made by their subcontractors in the certification and disclosure form.

(f) Cost allowability. Nothing in this clause makes allowable or reasonable any costs which would otherwise be unallowable or unreasonable. Conversely, costs made specifically unallowable by the requirements in this clause will not be made allowable under any other provision.

(End of clause)

52.204-4 PRINTED OR COPIED DOUBLE-SIDED ON RECYCLED PAPER (AUG 2000)

(a) Definitions. As used in this clause--

“Postconsumer material” means a material or finished product that has served its intended use and has been discarded for disposal or recovery, having completed its life as a consumer item. Postconsumer material is a part of the broader category of “recovered material.” For paper and

paper products, postconsumer material means “postconsumer fiber” defined by the U.S. Environmental Protection Agency (EPA) as--

(1) Paper, paperboard, and fibrous materials from retail stores, office buildings, homes, and so forth, after they have passed through their end-usage as a consumer item, including: used corrugated boxes; old newspapers; old magazines; mixed waste paper; tabulating cards; and used cordage; or

(2) All paper, paperboard, and fibrous materials that enter and are collected from municipal solid waste; but not

(3) Fiber derived from printers' over-runs, converters' scrap, and over-issue publications.

“Printed or copied double-sided” means printing or reproducing a document so that information is on both sides of a sheet of paper.

“Recovered material,” for paper and paper products, is defined by EPA in its Comprehensive Procurement Guideline as “recovered fiber” and means the following materials:

(1) Postconsumer fiber; and

(2) Manufacturing wastes such as--

(i) Dry paper and paperboard waste generated after completion of the papermaking process (that is, those manufacturing operations up to and including the cutting and trimming of the paper machine reel into smaller rolls or rough sheets) including: envelope cuttings, bindery trimmings, and other paper and paperboard waste resulting from printing, cutting, forming, and other converting operations; bag, box, and carton manufacturing wastes; and butt rolls, mill wrappers, and rejected unused stock; and

(ii) Repulped finished paper and paperboard from obsolete inventories of paper and paperboard manufacturers, merchants, wholesalers, dealers, printers, converters, or others.

(b) In accordance with Section 101 of Executive Order 13101 of September 14, 1998, Greening the Government through Waste Prevention, Recycling, and Federal Acquisition, the Contractor is encouraged to submit paper documents, such as offers, letters, or reports, that are printed or copied double-sided on recycled paper that meet minimum content standards specified in Section 505 of Executive Order 13101, when not using electronic commerce methods to submit information or data to the Government.

(c) If the Contractor cannot purchase high-speed copier paper, offset paper, forms bond, computer printout paper, carbonless paper, file folders, white wove envelopes, writing and office paper, book paper, cotton fiber paper, and cover stock meeting the 30 percent postconsumer material standard for use in submitting paper documents to the Government, it should use paper containing no less than 20 percent postconsumer material. This lesser standard should be used

only when paper meeting the 30 percent postconsumer material standard is not obtainable at a reasonable price or does not meet reasonable performance standards.

(End of clause)

52.209-6 PROTECTING THE GOVERNMENT'S INTEREST WHEN SUBCONTRACTING WITH CONTRACTORS DEBARRED, SUSPENDED, OR PROPOSED FOR DEBARMENT (JUL 1995)

(a) The Government suspends or debars Contractors to protect the Government's interests. The Contractor shall not enter into any subcontract in excess of the $25,000 with a Contractor that is debarred, suspended, or proposed for debarment unless there is a compelling reason to do so.

(b) The Contractor shall require each proposed first-tier subcontractor, whose subcontract will exceed $25,000, to disclose to the Contractor, in writing, whether as of the time of award of the subcontract, the subcontractor, or its principles, is or is not debarred, suspended, or proposed for debarment by the Federal Government.

(c) A corporate officer or a designee of the Contractor shall notify the Contracting Officer, in writing, before entering into a subcontract with a party that is debarred, suspended, or proposed for debarment (see FAR 9.404 for information on the List of Parties Excluded from Federal Procurement and Nonprocurement Programs). The notice must include the following:

(1) The name of the subcontractor.

(2) The Contractor's knowledge of the reasons for the subcontractor being on the List of Parties Excluded from Federal Procurement and Nonprocurement Programs.

(3) The compelling reason(s) for doing business with the subcontractor notwithstanding its inclusion on the List of Parties Excluded from Federal Procurement and Nonprocurement Programs.

(4) The systems and procedures the Contractor has established to ensure that it is fully protecting the Government's interests when dealing with such subcontractor in view of the specific basis for the party's debarment, suspension, or proposed debarment.

(End of clause)

52.211-5 MATERIAL REQUIREMENTS (AUG 2000)

(a) Definitions.

As used in this clause--

New means composed of previously unused components, whether manufactured from virgin material, recovered material in the form of raw material, or materials and by-products generated

from, and reused within, an original manufacturing process; provided that the supplies meet contract requirements, including but not limited to, performance, reliability, and life expectancy.

Reconditioned means restored to the original normal operating condition by readjustments and material replacement.

Recovered material means waste materials and by-products recovered or diverted from solid waste, but the term does not include those materials and by-products generated from, and commonly reused within, an original manufacturing process.

Remanufactured means factory rebuilt to original specifications.

Virgin material means--

(1) Previously unused raw material, including previously unused copper, aluminum, lead, zinc, iron, other metal or metal ore; or

(2) Any undeveloped resource that is, or with new technology will become, a source of raw materials.

(b) Unless this contract otherwise requires virgin material or supplies composed of or manufactured from virgin material, the Contractor shall provide supplies that are new, reconditioned, or remanufactured, as defined in this clause.

(c) A proposal to provide unused former Government surplus property shall include a complete description of the material, the quantity, the name of the Government agency from which acquired, and the date of acquisition.

(d) A proposal to provide used, reconditioned, or remanufactured supplies shall include a detailed description of such supplies and shall be submitted to the Contracting Officer for approval.

(e) Used, reconditioned, or remanufactured supplies, or unused former Government surplus property, may be used in contract performance if the Contractor has proposed the use of such supplies, and the Contracting Officer has authorized their use.

(End of clause)

52.215-2 AUDIT AND RECORDS--NEGOTIATION (JUN 1999)

(a) As used in this clause, "records" includes books, documents, accounting procedures and practices, and other data, regardless of type and regardless of whether such items are in written form, in the form of computer data, or in any other form.

(b) Examination of costs. If this is a cost-reimbursement, incentive, time-and-materials, labor-hour, or price redeterminable contract, or any combination of these, the Contractor shall maintain

and the Contracting Officer, or an authorized representative of the Contracting Officer, shall have the right to examine and audit all records and other evidence sufficient to reflect properly all costs claimed to have been incurred or anticipated to be incurred directly or indirectly in performance of this contract. This right of examination shall include inspection at all reasonable times of the Contractor's plants, or parts of them, engaged in performing the contract.

(c) Cost or pricing data. If the Contractor has been required to submit cost or pricing data in connection with any pricing action relating to this contract, the Contracting Officer, or an authorized representative of the Contracting Officer, in order to evaluate the accuracy, completeness, and currency of the cost or pricing data, shall have the right to examine and audit all of the Contractor's records, including computations and projections, related to--

(1) The proposal for the contract, subcontract, or modification;

(2) The discussions conducted on the proposal(s), including those related to negotiating;

(3) Pricing of the contract, subcontract, or modification; or

(4) Performance of the contract, subcontract or modification.

(d) Comptroller General--(1) The Comptroller General of the United States, or an authorized representative, shall have access to and the right to examine any of the Contractor's directly pertinent records involving transactions related to this contract or a subcontract hereunder.

(2) This paragraph may not be construed to require the Contractor or subcontractor to create or maintain any record that the Contractor or subcontractor does not maintain in the ordinary course of business or pursuant to a provision of law.

(e) Reports. If the Contractor is required to furnish cost, funding, or performance reports, the Contracting Officer or an authorized representative of the Contracting Officer shall have the right to examine and audit the supporting records and materials, for the purpose of evaluating (1) the effectiveness of the Contractor's policies and procedures to produce data compatible with the objectives of these reports and (2) the data reported.

(f) Availability. The Contractor shall make available at its office at all reasonable times the records, materials, and other evidence described in paragraphs (a), (b), (c), (d), and (e) of this clause, for examination, audit, or reproduction, until 3 years after final payment under this contract or for any shorter period specified in Subpart 4.7, Contractor Records Retention, of the Federal Acquisition Regulation (FAR), or for any longer period required by statute or by other clauses of this contract. In addition--

(1) If this contract is completely or partially terminated, the Contractor shall make available the records relating to the work terminated until 3 years after any resulting final termination settlement; and

(2) The Contractor shall make available records relating to appeals under the Disputes clause or to litigation or the settlement of claims arising under or relating to this contract until such appeals, litigation, or claims are finally resolved.

(g) The Contractor shall insert a clause containing all the terms of this clause, including this paragraph (g), in all subcontracts under this contract that exceed the simplified acquisition threshold, and--

(1) That are cost-reimbursement, incentive, time-and-materials, labor-hour, or price-redeterminable type or any combination of these;

(2) For which cost or pricing data are required; or

(3) That require the subcontractor to furnish reports as discussed in paragraph (e) of this clause.

The clause may be altered only as necessary to identify properly the contracting parties and the Contracting Officer under the Government prime contract.

(End of clause)

52.215-8 ORDER OF PRECEDENCE--UNIFORM CONTRACT FORMAT (OCT 1997)

Any inconsistency in this solicitation or contract shall be resolved by giving precedence in the following order:

(a) The Schedule (excluding the specifications).

(b) Representations and other instructions.

(c) Contract clauses.

(d) Other documents, exhibits, and attachments.

(e) The specifications.

(End of clause)

52.215-11 PRICE REDUCTION FOR DEFECTIVE COST OR PRICING DATA--MODIFICATIONS (OCT 1997)

(a) This clause shall become operative only for any modification to this contract involving a pricing adjustment expected to exceed the threshold for submission of cost or pricing data at FAR 15.403-4, except that this clause does not apply to any modification if an exception under FAR 15.403-1 applies.

(b) If any price, including profit or fee, negotiated in connection with any modification under this clause, or any cost reimbursable under this contract, was increased by any significant amount because (1) the Contractor or a subcontractor furnished cost or pricing data that were not complete, accurate, and current as certified in its Certificate of Current Cost or Pricing Data, (2) a subcontractor or prospective subcontractor furnished the Contractor cost or pricing data that were not complete, accurate, and current as certified in the Contractor's Certificate of Current Cost or Pricing Data, or (3) any of these parties furnished data of any description that were not accurate, the price or cost shall be reduced accordingly and the contract shall be modified to reflect the reduction. This right to a price reduction is limited to that resulting from defects in data relating to modifications for which this clause becomes operative under paragraph (a) of this clause.

(c) Any reduction in the contract price under paragraph (b) of this clause due to defective data from a prospective subcontractor that was not subsequently awarded the subcontract shall be limited to the amount, plus applicable overhead and profit markup, by which--

(1) The actual subcontract; or

(2) The actual cost to the Contractor, if there was no subcontract, was less than the prospective subcontract cost estimate submitted by the Contractor; provided, that the actual subcontract price was not itself affected by defective cost or pricing data.

(d)(1) If the Contracting Officer determines under paragraph (b) of this clause that a price or cost reduction should be made, the Contractor agrees not to raise the following matters as a defense:

(i) The Contractor or subcontractor was a sole source supplier or otherwise was in a superior bargaining position and thus the price of the contract would not have been modified even if accurate, complete, and current cost or pricing data had been submitted.

(ii) The Contracting Officer should have known that the cost or pricing data in issue were defective even though the Contractor or subcontractor took no affirmative action to bring the character of the data to the attention of the Contracting Officer.

(iii) The contract was based on an agreement about the total cost of the contract and there was no agreement about the cost of each item procured under the contract.

(iv) The Contractor or subcontractor did not submit a Certificate of Current Cost or Pricing Data.

(2)(i) Except as prohibited by subdivision (d)(2)(ii) of this clause, an offset in an amount determined appropriate by the Contracting Officer based upon the facts shall be allowed against the amount of a contract price reduction if--

(A) The Contractor certifies to the Contracting Officer that, to the best of the Contractor's knowledge and belief, the Contractor is entitled to the offset in the amount requested; and

(B) The Contractor proves that the cost or pricing data were available before the “as of” date specified on its Certificate of Current Cost or Pricing Data, and that the data were not submitted before such date.

(ii) An offset shall not be allowed if--

(A) The understated data were known by the Contractor to be understated before the “as of” date specified on its Certificate of Current Cost or Pricing Data; or

(B) The Government proves that the facts demonstrate that the contract price would not have increased in the amount to be offset even if the available data had been submitted before the “as of” date specified on its Certificate of Current Cost or Pricing Data.

(e) If any reduction in the contract price under this clause reduces the price of items for which payment was made prior to the date of the modification reflecting the price reduction, the Contractor shall be liable to and shall pay the United States at the time such overpayment is repaid--

(1) Simple interest on the amount of such overpayment to be computed from the date(s) of overpayment to the Contractor to the date the Government is repaid by the Contractor at the applicable underpayment rate effective for each quarter prescribed by the Secretary of the Treasury under 26 U.S.C. 6621(a)(2); and

A penalty equal to the amount of the overpayment, if the Contractor or subcontractor knowingly submitted cost or pricing data that were incomplete, inaccurate, or noncurrent.

(End of clause)

52.215-13 SUBCONTRACTOR COST OR PRICING DATA--MODIFICATIONS (OCT 1997)

(a) The requirements of paragraphs (b) and (c) of this clause shall--

(1) Become operative only for any modification to this contract involving a pricing adjustment expected to exceed the threshold for submission of cost or pricing data at FAR 15.403-4; and

(2) Be limited to such modifications.

(b) Before awarding any subcontract expected to exceed the threshold for submission of cost or pricing data at FAR 15.403-4, on the date of agreement on price or the date of award, whichever is later; or before pricing any subcontract modification involving a pricing adjustment expected to exceed the threshold for submission of cost or pricing data at FAR 15.403-4, the Contractor shall require the subcontractor to submit cost or pricing data (actually or by specific identification in writing), unless an exception under FAR 15.403-1 applies.

(c) The Contractor shall require the subcontractor to certify in substantially the form prescribed in FAR 15.406-2 that, to the best of its knowledge and belief, the data submitted under paragraph (b) of this clause were accurate, complete, and current as of the date of agreement on the negotiated price of the subcontract or subcontract modification.

The Contractor shall insert the substance of this clause, including this paragraph (d), in each subcontract that exceeds the threshold for submission of cost or pricing data at FAR 15.403-4 on the date of agreement on price or the date of award, whichever is later.

(End of clause)

52.215-14 INTEGRITY OF UNIT PRICES (OCT 1997)

(a) Any proposal submitted for the negotiation of prices for items of supplies shall distribute costs within contracts on a basis that ensures that unit prices are in proportion to the items' base cost (e.g., manufacturing or acquisition costs). Any method of distributing costs to line items that distorts unit prices shall not be used. For example, distributing costs equally among line items is not acceptable except when there is little or no variation in base cost. Nothing in this paragraph requires submission of cost or pricing data not otherwise required by law or regulation.

(b) When requested by the Contracting Officer, the Offeror/Contractor shall also identify those supplies that it will not manufacture or to which it will not contribute significant value.

The Contractor shall insert the substance of this clause, less paragraph (b), in all subcontracts for other than: acquisitions at or below the simplified acquisition threshold in FAR Part 2; construction or architect-engineer services under FAR Part 36; utility services under FAR Part 41; services where supplies are not required; commercial items; and petroleum products.

(End of clause)

52.215-21 REQUIREMENTS FOR COST OR PRICING DATA OR INFORMATION OTHER THAN COST OR PRICING DATA--MODIFICATIONS (OCT 1997)

(a) Exceptions from cost or pricing data. (1) In lieu of submitting cost or pricing data for modifications under this contract, for price adjustments expected to exceed the threshold set forth at FAR 15.403-4 on the date of the agreement on price or the date of the award, whichever is later, the Contractor may submit a written request for exception by submitting the information described in the following subparagraphs. The Contracting Officer may require additional supporting information, but only to the extent necessary to determine whether an exception should be granted, and whether the price is fair and reasonable--

(i) Identification of the law or regulation establishing the price offered. If the price is controlled under law by periodic rulings, reviews, or similar actions of a governmental body, attach a copy of the controlling document, unless it was previously submitted to the contracting office.

(ii) Information on modifications of contracts or subcontracts for commercial items. (A) If--

(1) The original contract or subcontract was granted an exception from cost or pricing data requirements because the price agreed upon was based on adequate price competition or prices set by law or regulation, or was a contract or subcontract for the acquisition of a commercial item; and

(2) The modification (to the contract or subcontract) is not exempted based on one of these exceptions, then the Contractor may provide information to establish that the modification would not change the contract or subcontract from a contract or subcontract for the acquisition of a commercial item to a contract or subcontract for the acquisition of an item other than a commercial item.

(B) For a commercial item exception, the Contractor shall provide, at a minimum, information on prices at which the same item or similar items have previously been sold that is adequate for evaluating the reasonableness of the price of the modification. Such information may include--

(1) For catalog items, a copy of or identification of the catalog and its date, or the appropriate pages for the offered items, or a statement that the catalog is on file in the buying office to which the proposal is being submitted. Provide a copy or describe current discount policies and price lists (published or unpublished), e.g., wholesale, original equipment manufacturer, or reseller. Also explain the basis of each offered price and its relationship to the established catalog price, including how the proposed price relates to the price of recent sales in quantities similar to the proposed quantities.

(2) For market-priced items, the source and date or period of the market quotation or other basis for market price, the base amount, and applicable discounts. In addition, describe the nature of the market.

(3) For items included on an active Federal Supply Service Multiple Award Schedule contract, proof that an exception has been granted for the schedule item.

(2) The Contractor grants the Contracting Officer or an authorized representative the right to examine, at any time before award, books, records, documents, or other directly pertinent records to verify any request for an exception under this clause, and the reasonableness of price. For items priced using catalog or market prices, or law or regulation , access does not extend to cost or profit information or other data relevant solely to the Contractor's determination of the prices to be offered in the catalog or marketplace.

(b) Requirements for cost or pricing data. If the Contractor is not granted an exception from the requirement to submit cost or pricing data, the following applies:

(1) The Contractor shall submit cost or pricing data and supporting attachments in accordance with Table 15-2 of FAR 15.408.

As soon as practicable after agreement on price, but before award (except for unpriced actions), the Contractor shall submit a Certificate of Current Cost or Pricing Data, as prescribed by FAR 15.406-2.

(End of clause)

52.217-7 OPTION FOR INCREASED QUANTITY--SEPARATELY PRICED LINE ITEM (MAR 1989)

The Government may require the delivery of the numbered line item, identified in the Schedule as an option item, in the quantity and at the price stated in the Schedule. The Contracting Officer may exercise the option by written notice to the Contractor within 180 calendar days of award of the contract for the third vessel and 270 calendar days of award for the fourth vessel. Delivery of added items shall continue at the same rate that like items are called for under the contract, unless the parties otherwise agree.

(End of clause)

52.219-4 NOTICE OF PRICE EVALUATION PREFERENCE FOR HUBZONE SMALL BUSINESS CONCERNS (JAN 1999)

(a) Definition. HUBZone small business concern, as used in this clause, means a small business concern that appears on the List of Qualified HUBZone Small Business Concerns maintained by the Small Business Administration.

(b) Evaluation preference. (1) Offers will be evaluated by adding a factor of 10 percent to the price of all offers, except--

(i) Offers from HUBZone small business concerns that have not waived the evaluation preference;

(ii) Otherwise successful offers from small business concerns;

(iii) Otherwise successful offers of eligible products under the Trade Agreements Act when the dollar threshold for application of the Act is exceeded (see 25.402 of the Federal Acquisition Regulation (FAR)); and

(iv) Otherwise successful offers where application of the factor would be inconsistent with a Memorandum of Understanding or other international agreement with a foreign government.

(2) The factor of 10 percent shall be applied on a line item basis or to any group of items on which award may be made. Other evaluation factors described in the solicitation shall be applied before application of the factor.

(3) A concern that is both a HUBZone small business concern and a small disadvantaged business concern will receive the benefit of both the HUBZone small business price evaluation preference and the small disadvantaged business price evaluation adjustment (see FAR clause

52.219-23). Each applicable price evaluation preference or adjustment shall be calculated independently against an offeror's base offer.

These individual preference amounts shall be added together to arrive at the total evaluated price for that offer.

(c) Waiver of evaluation preference. A HUBZone small business concern may elect to waive the evaluation preference, in which case the factor will be added to its offer for evaluation purposes. The agreements in paragraph (d) of this clause do not apply if the offeror has waived the evaluation preference.

___ Offeror elects to waive the evaluation preference.

(d) Agreement. A HUBZone small business concern agrees that in the performance of the contract, in the case of a contract for

(1) Services (except construction), at least 50 percent of the cost of personnel for contract performance will be spent for employees of the concern or employees of other HUBZone small business concerns;

(2) Supplies (other than procurement from a nonmanufacturer of such supplies), at least 50 percent of the cost of manufacturing, excluding the cost of materials, will be performed by the concern or other HUBZone small business concerns;

(3) General construction, at least 15 percent of the cost of the contract performance incurred for personnel will be will be spent on the concern's employees or the employees of other HUBZone small business concerns; or

(4) Construction by special trade contractors, at least 25 percent of the cost of the contract performance incurred for personnel will be spent on the concern's employees or the employees of other HUBZone small business concerns.

(e) A HUBZone joint venture agrees that in the performance of the contract, the applicable percentage specified in paragraph (d) of this clause will be performed by the HUBZone small business participant or participants.

(f) A HUBZone small business concern nonmanufacturer agrees to furnish in performing this contract only end items manufactured or produced by HUBZone small business manufacturer concerns. This paragraph does not apply in connection with construction or service contracts.

(End of clause)

52.219-8 UTILIZATION OF SMALL BUSINESS CONCERNS (OCT 2000)

(a) It is the policy of the United States that small business concerns, veteran-owned small business concerns, service-disabled veteran-owned small business concerns, HUBZone small

business concerns, small disadvantaged business concerns, and women-owned small business concerns shall have the maximum practicable opportunity to participate in performing contracts let by any Federal agency, including contracts and subcontracts for subsystems, assemblies, components, and related services for major systems. It is further the policy of the United States that its prime contractors establish procedures to ensure the timely payment of amounts due pursuant to the terms of their subcontracts with small business concerns, veteran-owned small business concerns, service-disabled veteran-owned small business concerns, HUBZone small business concerns, small disadvantaged business concerns, and women-owned small business concerns.

(b) The Contractor hereby agrees to carry out this policy in the awarding of subcontracts to the fullest extent consistent with efficient contract performance. The Contractor further agrees to cooperate in any studies or surveys as may be conducted by the United States Small Business Administration or the awarding agency of the United States as may be necessary to determine the extent of the Contractor's compliance with this clause.

Definitions. As used in this contract--

HUBZone small business concern means a small business concern that appears on the List of Qualified HUBZone Small Business Concerns maintained by the Small Business Administration.

Service-disabled veteran-owned small business concern--

(1) Means a small business concern--

(i) Not less than 51 percent of which is owned by one or more service-disabled veterans or, in the case of any publicly owned business, not less than 51 percent of the stock of which is owned by one or more service-disabled veterans; and

(ii) The management and daily business operations of which are controlled by one or more service-disabled veterans or, in the case of a veteran with permanent and severe disability, the spouse or permanent caregiver of such veteran.

(2) Service-disabled veteran means a veteran, as defined in 38 U.S.C. 101(2), with a disability that is service-connected, as defined in 38 U.S.C. 101(16).

Small business concern means a small business as defined pursuant to Section 3 of the Small Business Act and relevant regulations promulgated pursuant thereto.

Small disadvantaged business concern means a small business concern that represents, as part of its offer that--

(1) It has received certification as a small disadvantaged business concern consistent with 13 CFR part 124, subpart B;

(2) No material change in disadvantaged ownership and control has occurred since its certification;

(3) Where the concern is owned by one or more individuals, the net worth of each individual upon whom the certification is based does not exceed $750,000 after taking into account the applicable exclusions set forth at 13 CFR 124.104(c)(2); and

(4) It is identified, on the date of its representation, as a certified small disadvantaged business in the database maintained by the Small Business Administration (PRO-Net).

Veteran-owned small business concern means a small business concern--

(1) Not less than 51 percent of which is owned by one or more veterans (as defined at 38 U.S.C. 101(2)) or, in the case of any publicly owned business, not less than 51 percent of the stock of which is owned by one or more veterans; and

(2) The management and daily business operations of which are controlled by one or more veterans.

Women-owned small business concern means a small business concern--

(1) That is at least 51 percent owned by one or more women, or, in the case of any publicly owned business, at least 51 percent of the stock of which is owned by one or more women; and

(2) Whose management and daily business operations are controlled by one or more women.

(d) Contractors acting in good faith may rely on written representations by their subcontractors regarding their status as a small business concern, a veteran-owned small business concern, a service-disabled veteran-owned small business concern, a HUBZone small business concern, a small disadvantaged business concern, or a women-owned small business concern.

(End of clause)

52.219-9 SMALL BUSINESS SUBCONTRACTING PLAN (JAN 2002)

(a) This clause does not apply to small business concerns.

(b) Definitions. As used in this clause--

Commercial item means a product or service that satisfies the definition of commercial item in section 2.101 of the Federal Acquisition Regulation.

Commercial plan means a subcontracting plan (including goals) that covers the offeror's fiscal year and that applies to the entire production of commercial items sold by either the entire company or a portion thereof (e.g., division, plant, or product line).

Individual contract plan means a subcontracting plan that covers the entire contract period (including option periods), applies to a specific contract, and has goals that are based on the offeror's planned subcontracting in support of the specific contract, except that indirect costs incurred for common or joint purposes may be allocated on a prorated basis to the contract.

Master plan means a subcontracting plan that contains all the required elements of an individual contract plan, except goals, and may be incorporated into individual contract plans, provided the master plan has been approved.

Subcontract means any agreement (other than one involving an employer-employee relationship) entered into by a Federal Government prime Contractor or subcontractor calling for supplies or services required for performance of the contract or subcontract.

(c) The offeror, upon request by the Contracting Officer, shall submit and negotiate a subcontracting plan, where applicable, that separately addresses subcontracting with small business, veteran-owned small business, service-disabled veteran-owned small business, HUBZone small business concerns, small disadvantaged business, and women-owned small business concerns. If the offeror is submitting an individual contract plan, the plan must separately address subcontracting with small business, veteran-owned small business, HUBZone small business, small disadvantaged business, and women-owned small business concerns, with a separate part for the basic contract and separate parts for each option (if any). The plan shall be included in and made a part of the resultant contract. The subcontracting plan shall be negotiated within the time specified by the Contracting Officer. Failure to submit and negotiate the subcontracting plan shall make the offeror ineligible for award of a contract.

(d) The offeror's subcontracting plan shall include the following:

(1) Goals, expressed in terms of percentages of total planned subcontracting dollars, for the use of small business, veteran-owned small business, service-disabled veteran-owned small business, HUBZone small business, small disadvantaged business, and women-owned small business concerns as subcontractors. The offeror shall include all subcontracts that contribute to contract performance, and may include a proportionate share of products and services that are normally allocated as indirect costs.

(2) A statement of--

(i) Total dollars planned to be subcontracted for an individual contract plan; or the offeror's total projected sales, expressed in dollars, and the total value of projected subcontracts to support the sales for a commercial plan;

(ii) Total dollars planned to be subcontracted to small business concerns;

(iii) Total dollars planned to be subcontracted to veteran-owned small business concerns;

(iv) Total dollars planned to be subcontracted to HUBZone small business concerns;

(v) Total dollars planned to be subcontracted to small disadvantaged business concerns; and

(vi) Total dollars planned to be subcontracted to women-owned small business concerns.

(3) A description of the principal types of supplies and services to be subcontracted, and an identification of the types planned for subcontracting to--

(i) Small business concerns;

(ii) Veteran-owned small business concerns;

(iii) HUBZone small business concerns;

(iv) Small disadvantaged business concerns; and

(v) Women-owned small business concerns.

(4) A description of the method used to develop the subcontracting goals in paragraph (d)(1) of this clause.

(5) A description of the method used to identify potential sources for solicitation purposes (e.g., existing company source lists, the Procurement Marketing and Access Network (PRO-Net) of the Small Business Administration (SBA), veterans service organizations, the National Minority Purchasing Council Vendor Information Service, the Research and Information Division of the Minority Business Development Agency in the Department of Commerce, or small, HUBZone, small disadvantaged, and women-owned small business trade associations). A firm may rely on the information contained in PRO-Net as an accurate representation of a concern's size and ownership characteristics for the purposes of maintaining a small, veteran-owned small, HUBZone small, small disadvantaged, and women-owned small business source list. Use of PRO-Net as its source list does not relieve a firm of its responsibilities (e.g., outreach, assistance, counseling, or publicizing subcontracting opportunities) in this clause.

(6) A statement as to whether or not the offeror in included indirect costs in establishing subcontracting goals, and a description of the method used to determine the proportionate share of indirect costs to be incurred with—

(i) Small business concerns;

(ii) Veteran-owned small business concerns;

(iii) HUBZone small business concerns;

(iv) Small disadvantaged business concerns; and

(v) Women-owned small business concerns.

(7) The name of the individual employed by the offeror who will administer the offeror's subcontracting program, and a description of the duties of the individual.

(8) A description of the efforts the offeror will make to assure that small business, veteran-owned small business, service-disabled veteran-owned small business, HUBZone small business, small disadvantaged business and women-owned small business concerns have an equitable opportunity to compete for subcontracts.

(9) Assurances that the offeror will include the clause of this contract entitled ``Utilization of Small Business Concerns'' in all subcontracts that offer further subcontracting opportunities, and that the offeror will require all subcontractors (except small business concerns) that receive subcontracts in excess of $500,000 ($1,000,000 for construction of any public facility) to adopt a subcontracting plan that complies with the requirements of this clause.

(10) Assurances that the offeror will--

(i) Cooperate in any studies or surveys as may be required;

(ii) Submit periodic reports so that the Government can determine the extent of compliance by the offeror with the subcontracting plan;

(iii) Submit Standard Form (SF) 294, Subcontracting Report for Individual Contracts, and/or SF 295, Summary Subcontract Report, in accordance with paragraph (j) of this clause. The reports shall provide information on subcontract awards to small business concerns, veteran-owned small business concerns, service-disabled veteran-owned small business concerns, small disadvantaged business concerns, women-owned small business concerns, and Historically Black Colleges and Universities and Minority Institutions. Reporting shall be in accordance with the instructions on the forms or as provided in agency regulations.

(iv) Ensure that its subcontractors agree to submit SF 294 and SF 295.

(11) A description of the types of records that will be maintained concerning procedures that have been adopted to comply with the requirements and goals in the plan, including establishing source lists; and a description of the offeror's efforts to locate small business, veteran-owned small business, service-disabled veteran-owned small business, HUBZone small business, small disadvantaged business, and women-owned small business concerns and award subcontracts to them. The records shall include at least the following (on a plant-wide or company-wide basis, unless otherwise indicated)

(i) Source lists (e.g., PRO-Net), guides, and other data that identify small business, veteran-owner small business, service-disabled veteran-owned small business, HUBZone small business, small disadvantaged business, and women-owned small business concerns.

(ii) Organizations contacted in an attempt to locate sources that are small business, veteran-owned small business, service-disabled veteran-owned small business, HUBZone small business, small disadvantaged business, or women-owned small business concerns.

(iii) Records on each subcontract solicitation resulting in an award of more than $100,000, indicating--

(A) Whether small business concerns were solicited and, if not, why not;

(B) Whether veteran-owned small business concerns were solicited and, if not, why not;

(C) Whether HUBZone small business concerns were solicited and, if not, why not;

(D) Whether small disadvantaged business concerns were solicited and, if not, why not;

(E) Whether women-owned small business concerns were solicited and, if not, why not; and

(F) If applicable, the reason award was not made to a small business concern.

(iv) Records of any outreach efforts to contact--

(A) Trade associations;

(B) Business development organizations;

(C) Conferences and trade fairs to locate small, HUBZone small, small disadvantaged, and women-owned small business sources; and

(D) Veterans service organizations.

(v) Records of internal guidance and encouragement provided to buyers through--

(A) Workshops, seminars, training, etc.; and

(B) Monitoring performance to evaluate compliance with the program's requirements.

(vi) On a contract-by-contract basis, records to support award data submitted by the offeror to the Government, including the name, address, and business size of each subcontractor. Contractors having commercial plans need not comply with this requirement.

(e) In order to effectively implement this plan to the extent consistent with efficient contract performance, the Contractor shall perform the following functions:

(1) Assist small business, veteran-owner small business, service-disabled veteran-owned small business, HUBZone small business, small disadvantaged business, and women-owned small business concerns by arranging solicitations, time for the preparation of bids, quantities, specifications, and delivery schedules so as to facilitate the participation by such concerns. Where the Contractor's lists of potential small business, veteran-owner small business, service-disabled veteran-owned small business, HUBZone small business, small disadvantaged business,

and women-owned small business subcontractors are excessively long, reasonable effort shall be made to give all such small business concerns an opportunity to compete over a period of time.

(2) Provide adequate and timely consideration of the potentialities of small business, veteran-owner small business, service-disabled veteran-owned small business, HUBZone small business, small disadvantaged business, and women-owned small business concerns in all ``make-or-buy'' decisions.

(3) Counsel and discuss subcontracting opportunities with representatives of small business, veteran-owner small business, service-disabled veteran-owned small business, HUBZone small business, small disadvantaged business, and women-owned small business firms.

(4) Provide notice to subcontractors concerning penalties and remedies for misrepresentations of business status as small, veteran-owner small business, HUBZone small, small disadvantaged, or women-owned small business for the purpose of obtaining a subcontract that is to be included as part or all of a goal contained in the Contractor's subcontracting plan.

(f) A master plan on a plant or division-wide basis that contains all the elements required by paragraph (d) of this clause, except goals, may be incorporated by reference as a part of the subcontracting plan required of the offeror by this clause; provided--

(1) the master plan has been approved, (2) the offeror ensures that the master plan is updated as necessary and provides copies of the approved master plan, including evidence of its approval, to the Contracting Officer, and (3) goals and any deviations from the master plan deemed necessary by the Contracting Officer to satisfy the requirements of this contract are set forth in the individual subcontracting plan.

(g) A commercial plan is the preferred type of subcontracting plan for contractors furnishing commercial items. The commercial plan shall relate to the offeror's planned subcontracting generally, for both commercial and Government business, rather than solely to the Government contract. Commercial plans are also preferred for subcontractors that provide commercial items under a prime contract, whether or not the prime contractor is supplying a commercial item.

(h) Prior compliance of the offeror with other such subcontracting plans under previous contracts will be considered by the Contracting Officer in determining the responsibility of the offeror for award of the contract.

(i) The failure of the Contractor or subcontractor to comply in good faith with (1) the clause of this contract entitled "Utilization Of Small Business Concerns," or (2) an approved plan required by this clause, shall be a material breach of the contract.

(j) The Contractor shall submit the following reports:

(1) Standard Form 294, Subcontracting Report for Individual Contracts. This report shall be submitted to the Contracting Officer semiannually and at contract completion. The report covers subcontract award data related to this contract. This report is not required for commercial plans.

(2) Standard Form 295, Summary Subcontract Report. This report encompasses all of the contracts with the awarding agency. It must be submitted semi-annually for contracts with the Department of Defense and annually for contracts with civilian agencies. If the reporting activity is covered by a commercial plan, the reporting activity must report annually all subcontract awards under that plan. All reports submitted at the close of each fiscal year (both individual and commercial plans) shall include a breakout, in the Contractor's format, of subcontract awards, in whole dollars, to small disadvantaged business concerns by North American Industry Classification System (NAICS) Industry Subsector. For a commercial plan, the Contractor may obtain from each of its subcontractors a predominant NAICS Industry Subsector and report all awards to that subcontractor under its predominant NAICS Industry Subsector.

(End of clause)

52.219-16 LIQUIDATED DAMAGES-SUBCONTRACTING PLAN (JAN 1999)

(a) Failure to make a good faith effort to comply with the subcontracting plan, as used in this clause, means a willful or intentional failure to perform in accordance with the requirements of the subcontracting plan approved under the clause in this contract entitled "Small Business Subcontracting Plan," or willful or intentional action to frustrate the plan.

(b) Performance shall be measured by applying the percentage goals to the total actual subcontracting dollars or, if a commercial plan is involved, to the pro rata share of actual subcontracting dollars attributable to Government contracts covered by the commercial plan. If, at contract completion or, in the case of a commercial plan, at the close of the fiscal year for which the plan is applicable, the Contractor has failed to meet its subcontracting goals and the Contracting Officer decides in accordance with paragraph (c) of this clause that the Contractor failed to make a good faith effort to comply with its subcontracting plan, established in accordance with the clause in this contract entitled “Small Business Subcontracting Plan,” the Contractor shall pay the Government liquidated damages in an amount stated. The amount of probable damages attributable to the Contractor's failure to comply shall be an amount equal to the actual dollar amount by which the Contractor failed to achieve each subcontract goal.

(c) Before the Contracting Officer makes a final decision that the Contractor has failed to make such good faith effort, the Contracting Officer shall give the Contractor written notice specifying the failure and permitting the Contractor to demonstrate what good faith efforts have been made and to discuss the matter. Failure to respond to the notice may be taken as an admission that no valid explanation exists. If, after consideration of all the pertinent data, the Contracting Officer finds that the Contractor failed to make a good faith effort to comply with the subcontracting plan, the Contracting Officer shall issue a final decision to that effect and require that the Contractor pay the Government liquidated damages as provided in paragraph (b) of this clause.

(d) With respect to commercial plans, the Contracting Officer who approved the plan will perform the functions of the Contracting Officer under this clause on behalf of all agencies with contracts covered by the commercial plan.

(e) The Contractor shall have the right of appeal, under the clause in this contract entitled Disputes, from any final decision of the Contracting Officer.

(f) Liquidated damages shall be in addition to any other remedies that the Government may have.

(End of clause)

52.222-1 NOTICE TO THE GOVERNMENT OF LABOR DISPUTES (FEB 1997)

If the Contractor has knowledge that any actual or potential labor dispute is delaying or threatens to delay the timely performance of this contract, the Contractor shall immediately give notice, including all relevant information, to the Contracting Officer.

(End of clause)

52.222-3 CONVICT LABOR (AUG 1996)

The Contractor agrees not to employ in the performance of this contract any person undergoing a sentence of imprisonment which has been imposed by any court of a State, the District of Columbia, the Commonwealth of Puerto Rico, the Virgin Islands, Guam, American Samoa, the Commonwealth of the Northern Mariana Islands, or the Trust Territory of the Pacific Islands. This limitation, however, shall not prohibit the employment by the Contractor in the performance of this contract of persons on parole or probation to work at paid employment during the term of their sentence or persons who have been pardoned or who have served their terms. Nor shall it prohibit the employment by the Contractor in the performance of this contract of persons confined for violation of the laws of any of the States, the District of Columbia, the Commonwealth of Puerto Rico, the Virgin Islands, Guam, American Samoa, the Commonwealth of the Northern Mariana Islands, or the Trust Territory of the Pacific Islands who are authorized to work at paid employment in the community under the laws of such jurisdiction, if--

(a)(1) The worker is paid or is in an approved work training program on a voluntary basis;

(2) Representatives of local union central bodies or similar labor union organizations have been consulted;

(3) Such paid employment will not result in the displacement of employed workers, or be applied in skills, crafts, or trades in which there is a surplus of available gainful labor in the locality, or impair existing contracts for services; and

(4) The rates of pay and other conditions of employment will not be less than those paid or provided for work of a similar nature in the locality in which the work is being performed; and

(b) The Attorney General of the United States has certified that the work-release laws or regulations of the jurisdiction involved are in conformity with the requirements of Executive Order 11755, as amended by Executive Orders 12608 and 12943.

(End of clause)

52.222-19 CHILD LABOR--COOPERATION WITH AUTHORITIES AND REMEDIES (DEC 2001)

(a) Applicability. This clause does not apply to the extent that the Contractor is supplying end products mined, produced, or manufactured in--

(1) Canada, and the anticipated value of the acquisition is $25,000 or more;

(2) Israel, and the anticipated value of the acquisition is $50,000 or more;

(3) Mexico, and the anticipated value of the acquisition is $54,372 or more; or

(4) Aruba, Austria, Belgium, Denmark, Finland, France, Germany, Greece, Hong Kong, Iceland, Ireland, Italy, Japan, Korea, Liechtenstein, Luxembourg, Netherlands, Norway, Portugal, Singapore, Spain, Sweden, Switzerland, or the United Kingdom and the anticipated value of the acquisition is $177,000 or more.

(b) Cooperation with Authorities. To enforce the laws prohibiting the manufacture or importation of products mined, produced, or manufactured by forced or indentured child labor, authorized officials may need to conduct investigations to determine whether forced or indentured child labor was used to mine, produce, or manufacture any product furnished under this contract. If the solicitation includes the provision 52.222-18, Certification Regarding Knowledge of Child Labor for Listed End Products, or the equivalent at 2.212-3(i), the Contractor agrees to cooperate fully with authorized officials of the contracting agency, the Department of the Treasury, or the Department of Justice by providing reasonable access to records, documents, persons, or premises upon reasonable request by the authorized officials.

(c) Violations. The Government may impose remedies set forth in paragraph (d) for the following violations:

(1) The Contractor has submitted a false certification regarding knowledge of the use of forced or indentured child labor for listed end products.

(2) The Contractor has failed to cooperate, if required, in accordance with paragraph (b) of this clause, with an investigation of the use of forced or indentured child labor by an Inspector General, Attorney General, or the Secretary of the Treasury.

(3) The Contractor uses forced or indentured child labor in its mining, production, or manufacturing processes.

(4) The Contractor has furnished under the contract end products or components that have been mined, produced, or manufactured wholly or in part by forced or indentured child labor. (The Government will not pursue remedies at paragraph (d)(2) or paragraph (d)(3) of this clause unless sufficient evidence indicates that the Contractor knew of the violation.)

(d) Remedies. (1) The Contracting Officer may terminate the contract.

(2) The suspending official may suspend the Contractor in accordance with procedures in FAR Subpart 9.4.

(3) The debarring official may debar the Contractor for a period not to exceed 3 years in accordance with the procedures in FAR Subpart 9.4.

(End of clause)

52.222-20 WALSH-HEALEY PUBLIC CONTRACTS ACT (DEC 1996)

If this contract is for the manufacture or furnishing of materials, supplies, articles or equipment in an amount that exceeds or may exceed $10,000, and is subject to the Walsh-Healey Public Contracts Act, as amended (41 U.S.C. 35-45), the following terms and conditions apply:

(a) All stipulations required by the Act and regulations issued by the Secretary of Labor (41 CFR Chapter 50) are incorporated by reference. These stipulations are subject to all applicable rulings and interpretations of the Secretary of Labor that are now, or may hereafter, be in effect.

(b) All employees whose work relates to this contract shall be paid not less than the minimum wage prescribed by regulations issued by the Secretary of Labor (41 CFR 50-202.2). Learners, student learners, apprentices, and handicapped workers may be employed at less than the prescribed minimum wage (see 41 CFR 50-202.3) to the same extent that such employment is permitted under Section 14 of the Fair Labor Standards Act (41 U.S.C. 40).

(End of clause)

52.222-21 PROHIBITION OF SEGREGATED FACILITIES (FEB 1999)

(a) Segregated facilities, as used in this clause, means any waiting rooms, work areas, rest rooms and wash rooms, restaurants and other eating areas, time clocks, locker rooms and other storage or dressing areas, parking lots, drinking fountains, recreation or entertainment areas, transportation, and housing facilities provided for employees, that are segregated by explicit directive or are in fact segregated on the basis of race, color, religion, sex, or national origin because of written or oral policies or employee custom. The term does not include separate or single-user rest rooms or necessary dressing or sleeping areas provided to assure privacy between the sexes.

(b) The Contractor agrees that it does not and will not maintain or provide for its employees any segregated facilities at any of its establishments, and that it does not and will not permit its employees to perform their services at any location under its control where segregated facilities are maintained. The Contractor agrees that a breach of this clause is a violation of the Equal Opportunity clause in this contract.

(c) The Contractor shall include this clause in every subcontract and purchase order that is subject to the Equal Opportunity clause of this contract.

(End of clause)

52.222-26 EQUAL OPPORTUNITY (APR 2002)

(a) Definition. United States, as used in this clause, means the 50 States, the District of Columbia, Puerto Rico, the Northern Mariana Islands, American Samoa, Guam, the U.S. Virgin Islands, and Wake Island.

(b) If, during any 12-month period (including the 12 months preceding the award of this contract), the Contractor has been or is awarded nonexempt Federal contracts and/or subcontracts that have an aggregate value in excess of $10,000, the Contractor shall comply with paragraphs (b)(1) through (b)(11) of this clause, except for work performed outside the United States by employees who were not recruited within the United States. Upon request, the Contractor shall provide information necessary to determine the applicability of this clause.

(1) The Contractor shall not discriminate against any employee or applicant for employment because of race, color, religion, sex, or national origin. However, it shall not be a violation of this clause for the Contractor to extend a publicly announced preference in employment to Indians living on or near an Indian reservation, in connection with employment opportunities on or near an Indian reservation, as permitted by 41 CFR 60-1.5.

(2) The Contractor shall take affirmative action to ensure that applicants are employed, and that employees are treated during employment, without regard to their race, color, religion, sex, or national origin. This shall include, but not be limited to, (i) employment, (ii) upgrading, (iii) demotion, (iv) transfer, (v) recruitment or recruitment advertising, (vi) layoff or termination, (vii) rates of pay or other forms of compensation, and (viii) selection for training, including apprenticeship.

(3) The Contractor shall post in conspicuous places available to employees and applicants for employment the notices to be provided by the Contracting Officer that explain this clause.

(4) The Contractor shall, in all solicitations or advertisements for employees placed by or on behalf of the Contractor, state that all qualified applicants will receive consideration for employment without regard to race, color, religion, sex, or national origin.

(5) The Contractor shall send, to each labor union or representative of workers with which it has a collective bargaining agreement or other contract or understanding, the notice to be provided by the Contracting Officer advising the labor union or workers' representative of the Contractor's commitments under this clause, and post copies of the notice in conspicuous places available to employees and applicants for employment.

(6) The Contractor shall comply with Executive Order 11246, as amended, and the rules, regulations, and orders of the Secretary of Labor.

(7) The Contractor shall furnish to the contracting agency all information required by Executive Order 11246, as amended, and by the rules, regulations, and orders of the Secretary of Labor. The Contractor shall also file Standard Form 100 (EEO-1), or any successor form, as prescribed in 41 CFR part 60-1. Unless the Contractor has filed within the 12 months preceding the date of contract award, the Contractor shall, within 30 days after contract award, apply to either the regional Office of Federal Contract Compliance Programs (OFCCP) or the local office of the Equal Employment Opportunity Commission for the necessary forms.

(8) The Contractor shall permit access to its premises, during normal business hours, by the contracting agency or the OFCCP for the purpose of conducting on-site compliance evaluations and complaint investigations. The Contractor shall permit the Government to inspect and copy any books, accounts, records (including computerized records), and other material that may be relevant to the matter under investigation and pertinent to compliance with Executive Order 11246, as amended, and rules and regulations that implement the Executive Order.

(9) If the OFCCP determines that the Contractor is not in compliance with this clause or any rule, regulation, or order of the Secretary of Labor, this contract may be canceled, terminated, or suspended in whole or in part and the Contractor may be declared ineligible for further Government contracts, under the procedures authorized in Executive Order 11246, as amended. In addition, sanctions may be imposed and remedies invoked against the Contractor as provided in Executive Order 11246, as amended; in the rules, regulations, and orders of the Secretary of Labor; or as otherwise provided by law.

(10) The Contractor shall include the terms and conditions of subparagraphs (b)(1) through (11) of this clause in every subcontract or purchase order that is not exempted by the rules, regulations, or orders of the Secretary of Labor issued under Executive Order 11246, as amended, so that these terms and conditions will be binding upon each subcontractor or vendor.

(11) The Contractor shall take such action with respect to any subcontract or purchase order as the contracting officer may direct as a means of enforcing these terms and conditions, including sanctions for noncompliance; provided, that if the Contractor becomes involved in, or is threatened with, litigation with a subcontractor or vendor as a result of any direction, the Contractor may request the United States to enter into the litigation to protect the interests of the United States.

(c) Notwithstanding any other clause in this contract, disputes relative to this clause will be governed by the procedures in 41 CFR 60-1.1.

(End of clause)

52.222-35 EQUAL OPPORTUNITY FOR SPECIAL DISABLED VETERANS, VETERANS OF THE VIETNAM ERA AND OTHER ELIGIBLE VETERANS (DEC 2001)

(a) Definitions. As used in this clause--

All employment openings means all positions except executive and top management, those positions that will be filled from within the Contractor's organization, and positions lasting 3 days or less. This term includes full-time employment, temporary employment of more than 3 days duration, and part-time employment.

Executive and top management means any employee--

(1) Whose primary duty consists of the management of the enterprise in which the individual is employed or of a customarily recognized department or subdivision thereof;

(2) Who customarily and regularly directs the work of two or more other employees;

(3) Who has the authority to hire or fire other employees or whose suggestions and recommendations as to the hiring or firing and as to the advancement and promotion or any other change of status of other employees will be given particular weight;

(4) Who customarily and regularly exercises discretionary powers; and

(5) Who does not devote more than 20 percent or, in the case of an employee of a retail or service establishment, who does not devote more than 40 percent of total hours of work in the work week to activities that are not directly and closely related to the performance of the work described in paragraphs (1) through (4) of this definition. This paragraph (5) does not apply in the case of an employee who is in sole charge of an establishment or a physically separated branch establishment, or who owns at least a 20 percent interest in the enterprise in which the individual is employed.

Other eligible veteran means any other veteran who served on active duty during a war or in a campaign or expedition for which a campaign badge has been authorized.

Positions that will be filled from within the Contractor's organization means employment openings for which the Contractor will give no consideration to persons outside the Contractor's organization (including any affiliates, subsidiaries, and parent companies) and includes any openings the Contractor proposes to fill from regularly established “recall” lists. The exception does not apply to a particular opening once an employer decides to consider applicants outside of its organization.

Qualified special disabled veteran means a special disabled veteran who satisfies the requisite skill, experience, education, and other job-related requirements of the employment position such veteran holds or desires, and who, with or without reasonable accommodation, can perform the essential functions of such position.

Special disabled veteran means--

(1) A veteran who is entitled to compensation (or who but for the receipt of military retired pay would be entitled to compensation) under laws administered by the Department of Veterans Affairs for a disability--

(i) Rated at 30 percent or more; or

(ii) Rated at 10 or 20 percent in the case of a veteran who has been determined under 38 U.S.C. 3106 to have a serious employment handicap (i.e., a significant impairment of the veteran's ability to prepare for, obtain, or retain employment consistent with the veteran's abilities, aptitudes, and interests); or

(2) A person who was discharged or released from active duty because of a service-connected disability.

Veteran of the Vietnam era means a person who--

(1) Served on active duty for a period of more than 180 days and was discharged or released from active duty with other than a dishonorable discharge, if any part of such active duty occurred--

(i) In the Republic of Vietnam between February 28, 1961, and May 7, 1975; or

(ii) Between August 5, 1964, and May 7, 1975, in all other cases; or

(2) Was discharged or released from active duty for a service-connected disability if any part of the active duty was performed--

(i) In the Republic of Vietnam between February 28, 1961, and May 7, 1975; or

(ii) Between August 5, 1964, and May 7, 1975, in all other cases.
(b) General. (1) The Contractor shall not discriminate against the individual because the individual is a special disabled veteran, a veteran of the Vietnam era, or other eligible veteran, regarding any position for which the employee or applicant for employment is qualified. The Contractor shall take affirmative action to employ, advance in employment, and otherwise treat qualified special disabled veterans, veterans of the Vietnam era, and other eligible veterans without discrimination based upon their disability or veterans' status in all employment practices such as--

(i) Recruitment, advertising, and job application procedures;

(ii) Hiring, upgrading, promotion, award of tenure, demotion, transfer, layoff, termination, right of return from layoff and rehiring;

(iii) Rate of pay or any other form of compensation and changes in compensation;

(iv) Job assignments, job classifications, organizational structures, position descriptions, lines of progression, and seniority lists;

(v) Leaves of absence, sick leave, or any other leave;

(vi) Fringe benefits available by virtue of employment, whether or not administered by the Contractor;

(vii) Selection and financial support for training, including apprenticeship, and on-the-job training under 38 U.S.C. 3687, professional meetings, conferences, and other related activities, and selection for leaves of absence to pursue training;

(viii) Activities sponsored by the Contractor including social or recreational programs; and

(ix) Any other term, condition, or privilege of employment.

(2) The Contractor shall comply with the rules, regulations, and relevant orders of the Secretary of Labor issued under the Vietnam Era Veterans' Readjustment Assistance Act of 1972 (the Act), as amended (38 U.S.C. 4211 and 4212).

(c) Listing openings. (1) The Contractor shall immediately list all employment openings that exist at the time of the execution of this contract and those which occur during the performance of this contract, including those not generated by this contract, and including those occurring at an establishment of the Contractor other than the one where the contract is being performed, but excluding those of independently operated corporate affiliates, at an appropriate local public employment service office of the State wherein the opening occurs. Listing employment openings with the U.S. Department of Labor's America's Job Bank shall satisfy the requirement to list jobs with the local employment service office.

(2) The Contractor shall make the listing of employment openings with the local employment service office at least concurrently with using any other recruitment source or effort and shall involve the normal obligations of placing a bona fide job order, including accepting referrals of veterans and nonveterans. This listing of employment openings does not require hiring any particular job applicant or hiring from any particular group of job applicants and is not intended to relieve the Contractor from any requirements of Executive orders or regulations concerning nondiscrimination in employment.

(3) Whenever the Contractor becomes contractually bound to the listing terms of this clause, it shall advise the State public employment agency in each State where it has establishments of the name and location of each hiring location in the State. As long as the Contractor is contractually bound to these terms and has so advised the State agency, it need not advise the State agency of subsequent contracts. The Contractor may advise the State agency when it is no longer bound by this contract clause.

(d) Applicability. This clause does not apply to the listing of employment openings that occur and are filled outside the 50 States, the District of Columbia, the Commonwealth of Puerto Rico, the Commonwealth of the Northern Mariana Islands, American Samoa, Guam, the Virgin Islands of the United States, and Wake Island.

(e) Postings. (1) The Contractor shall post employment notices in conspicuous places that are available to employees and applicants for employment.

(2) The employment notices shall--

(i) State the rights of applicants and employees as well as the Contractor's obligation under the law to take affirmative action to employ and advance in employment qualified employees and applicants who are special disabled veterans, veterans of the Vietnam era, and other eligible veterans; and

(ii) Be in a form prescribed by the Deputy Assistant Secretary for Federal Contract Compliance Programs, Department of Labor (Deputy Assistant Secretary of Labor), and provided by or through the Contracting Officer.

(3) The Contractor shall ensure that applicants or employees who are special disabled veterans are informed of the contents of the notice (e.g., the Contractor may have the notice read to a visually disabled veteran, or may lower the posted notice so that it can be read by a person in a wheelchair).

(4) The Contractor shall notify each labor union or representative of workers with which it has a collective bargaining agreement, or other contract understanding, that the Contractor is bound by the terms of the Act and is committed to take affirmative action to employ, and advance in employment, qualified special disabled veterans, veterans of the Vietnam era, and other eligible veterans.

(f) Noncompliance. If the Contractor does not comply with the requirements of this clause, the Government may take appropriate actions under the rules, regulations, and relevant orders of the Secretary of Labor issued pursuant to the Act.

(g) Subcontracts. The Contractor shall insert the terms of this clause in all subcontracts or purchase orders of $25,000 or more unless exempted by rules, regulations, or orders of the Secretary of Labor. The Contractor shall act as specified by the Deputy Assistant Secretary of Labor to enforce the terms, including action for noncompliance.

(End of clause)

52.222-36 AFFIRMATIVE ACTION FOR WORKERS WITH DISABILITIES (JUN 1998)

(a) General. (1) Regarding any position for which the employee or applicant for employment is qualified, the Contractor shall not discriminate against any employee or applicant because of physical or mental disability. The Contractor agrees to take affirmative action to employ, advance in employment, and otherwise treat qualified individuals with disabilities without discrimination based upon their physical or mental disability in all employment practices such as--

(i) Recruitment, advertising, and job application procedures;

(ii) Hiring, upgrading, promotion, award of tenure, demotion, transfer, layoff, termination, right of return from layoff, and rehiring;

(iii) Rates of pay or any other form of compensation and changes in compensation;

(iv) Job assignments, job classifications, organizational structures, position descriptions, lines of progression, and seniority lists;

(v) Leaves of absence, sick leave, or any other leave;

(vi) Fringe benefits available by virtue of employment, whether or not administered by the Contractor;

(vii) Selection and financial support for training, including apprenticeships, professional meetings, conferences, and other related activities, and selection for leaves of absence to pursue training;

(viii) Activities sponsored by the Contractor, including social or recreational programs; and

(ix) Any other term, condition, or privilege of employment.

(2) The Contractor agrees to comply with the rules, regulations, and relevant orders of the Secretary of Labor (Secretary) issued under the Rehabilitation Act of 1973 (29 U.S.C. 793) (the Act), as amended.

(b) Postings. (1) The Contractor agrees to post employment notices stating--

(i) The Contractor's obligation under the law to take affirmative action to employ and advance in employment qualified individuals with disabilities; and

(ii) The rights of applicants and employees.

(2) These notices shall be posted in conspicuous places that are available to employees and applicants for employment. The Contractor shall ensure that applicants and employees with disabilities are informed of the contents of the notice (e.g., the Contractor may have the notice read to a visually disabled individual, or may lower the posted notice so that it might be read by a person in a wheelchair). The notices shall be in a form prescribed by the Deputy Assistant Secretary for Federal Contract Compliance of the U.S. Department of Labor (Deputy Assistant Secretary) and shall be provided by or through the Contracting Officer.

(3) The Contractor shall notify each labor union or representative of workers with which it has a collective bargaining agreement or other contract understanding, that the Contractor is bound by the terms of Section 503 of the Act and is committed to take affirmative action to employ, and advance in employment, qualified individuals with physical or mental disabilities.

(c) Noncompliance. If the Contractor does not comply with the requirements of this clause, appropriate actions may be taken under the rules, regulations, and relevant orders of the Secretary issued pursuant to the Act.

(d) Subcontracts. The Contractor shall include the terms of this clause in every subcontract or purchase order in excess of $10,000 unless exempted by rules, regulations, or orders of the Secretary. The Contractor shall act as specified by the Deputy Assistant Secretary to enforce the terms, including action for noncompliance.

(End of clause)

52.222-37 EMPLOYMENT REPORTS ON SPECIAL DISABLED VETERANS, VETERANS OF THE VIETNAM ERA, AND OTHER ELIGIBLE VETERANS (DEC 2001)

(a) Unless the Contractor is a State or local government agency, the Contractor shall report at least annually, as required by the Secretary of Labor, on--

(1) The number of special disabled veterans, the number of veterans of the Vietnam era, and other eligible veterans in the workforce of the Contractor by job category and hiring location; and

(2) The total number of new employees hired during the period covered by the report, and of the total, the number of special disabled veterans, the number of veterans of the Vietnam era, and the number of other eligible veterans; and

(3) The maximum number and the minimum number of employees of the Contractor during the period covered by the report.

(b) The Contractor shall report the above items by completing the Form VETS-100, entitled "Federal Contractor Veterans" Employment Report (VETS-100 Report)".

(c) The Contractor shall submit VETS-100 Reports no later than September 30 of each year beginning September 30, 1988.

(d) The employment activity report required by paragraph (a)(2) of this clause shall reflect total hires during the most recent 12-month period as of the ending date selected for the employment profile report required by paragraph (a)(1) of this clause. Contractors may select an ending date--

(1) As of the end of any pay period between July 1 and August 31 of the year the report is due; or

(2) As of December 31, if the Contractor has prior written approval from the Equal Employment Opportunity Commission to do so for purposes of submitting the Employer Information Report EEO-1 (Standard Form 100).

(e) The Contractor shall base the count of veterans reported according to paragraph (a) of this clause on voluntary disclosure. Each Contractor subject to the reporting requirements at 38

U.S.C. 4212 shall invite all special disabled veterans, veterans of the Vietnam era, and other eligible veterans who wish to benefit under the affirmative action program at 38 U.S.C. 4212 to identify themselves to the Contractor. The invitation shall state that--

(1) The information is voluntarily provided;

(2) The information will be kept confidential;

(3) Disclosure or refusal to provide the information will not subject the applicant or employee to any adverse treatment; and

(4) The information will be used only in accordance with the regulations promulgated under 38 U.S.C. 4212.

(f) The Contractor shall insert the terms of this clause in all subcontracts or purchase orders of $25,000 or more unless exempted by rules, regulations, or orders of the Secretary of Labor.

(End of clause)

52.223-6 DRUG-FREE WORKPLACE (MAY 2001)

(a) Definitions. As used in this clause --

"Controlled substance" means a controlled substance in schedules I through V of section 202 of the Controlled Substances Act (21 U.S.C. 812) and as further defined in regulation at 21 CFR 1308.11 - 1308.15.

"Conviction" means a finding of guilt (including a plea of nolo contendere) or imposition of sentence, or both, by any judicial body charged with the responsibility to deter- mine violations of the Federal or State criminal drug statutes.

"Criminal drug statute" means a Federal or non-Federal criminal statute involving the manufacture, distribution, dispensing, possession, or use of any controlled substance.

"Drug-free workplace" means the site(s) for the performance of work done by the Contractor in connection with a specific contract where employees of the Contractor are prohibited from engaging in the unlawful manufacture, distribution, dispensing, possession, or use of a controlled substance.

"Employee" means an employee of a Contractor directly engaged in the performance of work under a Government contract. "Directly engaged" is defined to include all direct cost employees and any other Contractor employee who has other than a minimal impact or involvement in contract performance.

"Individual" means an offeror/contractor that has no more than one employee including the offeror/contractor.

(b) The Contractor, if other than an individual, shall-- within 30 days after award (unless a longer period is agreed to in writing for contracts of 30 days or more performance duration), or as soon as possible for contracts of less than 30 days performance duration--

(1) Publish a statement notifying its employees that the unlawful manufacture, distribution, dispensing, possession, or use of a controlled substance is prohibited in the Contractor's workplace and specifying the actions that will be taken against employees for violations of such prohibition;

(2) Establish an ongoing drug-free awareness program to inform such employees about--

(i) The dangers of drug abuse in the workplace;

(ii) The Contractor's policy of maintaining a drug-free workplace;

(iii) Any available drug counseling, rehabilitation, and employee assistance programs; and

(iv) The penalties that may be imposed upon employees for drug abuse violations occurring in the workplace;

(3) Provide all employees engaged in performance of the contract with a copy of the statement required by subparagraph (b)(1) of this clause;

(4) Notify such employees in writing in the statement required by subparagraph (b)(1) of this clause that, as a condition of continued employment on this contract, the employee will--

(i) Abide by the terms of the statement; and

(ii) Notify the employer in writing of the employee's conviction under a criminal drug statute for a violation occurring in the workplace no later than 5 days after such conviction.

(5) Notify the Contracting Officer in writing within 10 days after receiving notice under subdivision (b)(4)(ii) of this clause, from an employee or otherwise receiving actual notice of such conviction. The notice shall include the position title of the employee;

(6) Within 30 days after receiving notice under subdivision (b)(4)(ii) of this clause of a conviction, take one of the following actions with respect to any employee who is convicted of a drug abuse violation occurring in the workplace:

(i) Taking appropriate personnel action against such employee, up to and including termination; or

(ii) Require such employee to satisfactorily participate in a drug abuse assistance or rehabilitation program approved for such purposes by a Federal, State, or local health, law enforcement, or other appropriate agency; and

(7) Make a good faith effort to maintain a drug-free workplace through implementation of subparagraphs (b)(1) though (b)(6) of this clause.

(c) The Contractor, if an individual, agrees by award of the contract or acceptance of a purchase order, not to engage in the unlawful manufacture, distribution, dispensing, possession, or use of a controlled substance while performing this contract.

(d) In addition to other remedies available to the Government, the Contractor's failure to comply with the requirements of paragraph (b) or (c) of this clause may, pursuant to FAR 23.506, render the Contractor subject to suspension of contract payments, termination of the contract for default, and suspension or debarment.

(End of clause)

52.223-14 TOXIC CHEMICAL RELEASE REPORTING (OCT 2000)

(a) Unless otherwise exempt, the Contractor, as owner or operator of a facility used in the performance of this contract, shall file by July 1 for the prior calendar year an annual Toxic Chemical Release Inventory Form (Form R) as described in sections 313(a) and (g) of the Emergency Planning and Community Right-to-Know Act of 1986 (EPCRA) (42 U.S.C. 11023(a) and (g)), and section 6607 of the Pollution Prevention Act of 1990 (PPA) (42 U.S.C. 13106). The Contractor shall file, for each facility subject to the Form R filing and reporting requirements, the annual Form R throughout the life of the contract.

(b) A Contractor owned or operated facility used in the performance of this contract is exempt from the requirement to file an annual Form R if--

(1) The facility does not manufacture, process, or otherwise use any toxic chemicals listed under section 313(c) of EPCRA, 42 U.S.C. 11023(c);

(2) The facility does not have 10 or more full-time employees as specified in section 313(b)(1)(A) of EPCRA, 42 U.S.C. 11023(b)(1)(A);

(3) The facility does not meet the reporting thresholds of toxic chemicals established under of EPCRA, 42 U.S.C. 11023(f) (including the alternate thresholds at 40 CFR 372.27, provided an appropriate certification form has been filed with EPA);

(4) The facility does not fall within Standard Industrial Classification Code (SIC) major groups 20 through 39 or their corresponding North American Industry Classification System (NAICS) sectors 31 through 33; or

(5) The facility is not located within any State of the United States, the District of Columbia, the Commonwealth of Puerto Rico, Guam, American Samoa, the United States Virgin Islands, the Northern Mariana Islands, or any other territory or possession over which the United States has jurisdiction.

(c) If the Contractor has certified to an exemption in accordance with one or more of the criteria in paragraph (b) of this clause, and after award of the contract circumstances change so that any of its owned or operated facilities used in the performance of this contract is no longer exempt--

(1) The Contractor shall notify the Contracting Officer; and

(2) The Contractor, as owner or operator of a facility used in the performance of this contract that is no longer exempt, shall (i) submit a Toxic Chemical Release Inventory Form (Form R) on or before July 1 for the prior calendar year during which the facility becomes eligible; and (ii) continue to file the annual Form R for the life of the contract for such facility.

(d) The Contracting Officer may terminate this contract or take other action as appropriate, if the Contractor fails to comply accurately and fully with the EPCRA and PPA toxic chemical release filing and reporting requirements.

(e) Except for acquisitions of commercial items, as defined in FAR Part 2, the Contractor shall--

(1) For competitive subcontracts expected to exceed $100,000 (including all options), include a solicitation provision substantially the same as the provision at FAR 52.223-13, Certification of Toxic Chemical Release Reporting; and

(2) Include in any resultant subcontract exceeding $100,000 (including all options), the substance of this clause, except this paragraph (e).

(End of clause)

52.225-13 RESTRICTIONS ON CERTAIN FOREIGN PURCHASES (JUL 2000)

(a) The Contractor shall not acquire, for use in the performance of this contract, any supplies or services originating from sources within, or that were located in or transported from or through, countries whose products are banned from importation into the United States under regulations of the Office of Foreign Assets Control, Department of the Treasury. Those countries are Cuba, Iran, Iraq, Libya, North Korea, Sudan, the territory of Afghanistan controlled by the Taliban, and Serbia (excluding the territory of Kosovo).

(b) The Contractor shall not acquire for use in the performance of this contract any supplies or services from entities controlled by the government of Iraq.

(c) The Contractor shall insert this clause, including this paragraph (c), in all subcontracts.

(End of clause)

52.226-1 UTILIZATION OF INDIAN ORGANIZATIONS AND INDIAN-OWNED ECONOMIC ENTERPRISES (JUN 2000)

(a) Definitions. As used in this clause:

"Indian" means any person who is a member of any Indian tribe, band, group, pueblo or community that is recognized by the Federal Government as eligible for services from the Bureau of Indian Affairs (BIA) in accordance with 25 U.S.C. 1452(c) and any ``Native" as defined in the Alaska Native Claims Settlement Act (43 U.S.C. 1601).

"Indian organization" means the governing body of any Indian tribe or entity established or recognized by the governing body of an Indian tribe for the purposes of 25 U.S.C., chapter 17.

"Indian-owned economic enterprise" means any Indian-owned (as determined by the Secretary of the Interior) commercial, industrial, or business activity established or organized for the purpose of profit, provided that Indian ownership constitutea not less than 51 percent of the enterprise.

"Indian tribe" means any Indian tribe, band, group, pueblo or community, including native villages and native groups (including corporations organized by Kenai, Juneau, Sitka, and Kodiak) as defined in the Alaska Native Claims Settlement Act, that is recognized by the Federal Government as eligible for services from BIA in accordance with 25 U.S.C. 1542(c).

"Interested party" means a prime contractor or an actual or prospective offeror whose direct economic interest would be affected by the award of a subcontract or by the failure to award a subcontract.

(b) The Contractor shall use its best efforts to give Indian organizations and Indian-owned economic enterprises (25 U.S.C. 1544) the maximum practicable opportunity to participate in the subcontracts it awards to the fullest extent consistent with efficient performance of its contract.

(1) The Contracting Officer and the Contractor, acting in good faith, may rely on the representation of an Indian organization or Indian-owned economic enterprise as to its eligibility, unless an
interested party challenges its status or the Contracting Officer has independent reason to question that status. In the event of a challenge to the representation of a subcontractor, the Contracting Officer will refer the matter to the U.S. Department of the Interior, Bureau of Indian Affairs (BIA), Attn: Chief, Division of
Contracting and Grants Administration, 1849 C Street, NW., MS 2626-MIB, Washington, DC 20240-4000.

The BIA will determine the eligibility and notify the Contracting Officer. No incentive payment will be made within 50 working days of subcontract award or while a challenge is pending. If a subcontractor is determined to be an ineligible participant, no incentive payment will be made under the Indian Incentive Program.

(2) The Contractor may request an adjustment under the Indian Incentive Program to the following:

(i) The estimated cost of a cost-type contract.

(ii) The target cost of a cost-plus-incentive-fee prime contract.

(iii) The target cost and ceiling price of a fixed-price incentive prime contract.

(iv) The price of a firm-fixed-price prime contract.

(3) The amount of the adjustment to the prime contract is 5 percent of the estimated cost, target cost, or firm-fixed-price included in the subcontract initially awarded to the Indian organization or Indian-owned economic enterprise.

(4) The Contractor has the burden of proving the amount claimed and must assert its request for an adjustment prior to completion of contract performance.

(c) The Contracting Officer, subject to the terms and conditions of the contract and the availability of funds, will authorize an incentive payment of 5 percent of the amount paid to the subcontractor. The Contracting Officer will seek funding in accordance with agency procedures.

(End of clause)

52.227-1 AUTHORIZATION AND CONSENT (JUL 1995)

(a) The Government authorizes and consents to all use and manufacture, in performing this contract or any subcontract at any tier, of any invention described in and covered by a United States patent (1) embodied in the structure or composition of any article the delivery of which is accepted by the Government under this contract or (2) used in machinery, tools, or methods whose use necessarily results from compliance by the Contractor or a subcontractor with (i) specifications or written provisions forming a part of this contract or (ii) specific written instructions given by the Contracting Officer directing the manner of performance. The entire liability to the Government for infringement of a patent of the United States shall be determined solely by the provisions of the indemnity clause, if any, included in this contract or any subcontract hereunder (including any lower-tier subcontract), and the Government assumes liability for all other infringement to the extent of the authorization and consent hereinabove granted.

(b) The Contractor agrees to include, and require inclusion of, this clause, suitably modified to identify the parties, in all subcontracts at any tier for supplies or services (including construction, architect-engineer services, and materials, supplies, models, samples, and design or testing services expected to exceed the simplified acquisition threshold (however, omission of this clause from any subcontract, including those at or below the simplified acquisition threshold, does not affect this authorization and consent.)

(End of clause)

52.227-2 NOTICE AND ASSISTANCE REGARDING PATENT AND COPYRIGHT INFRINGEMENT (AUG 1996)

(a) The Contractor shall report to the Contracting Officer, promptly and in reasonable written detail, each notice or claim of patent or copyright infringement based on the performance of this contract of which the Contractor has knowledge.

(b) In the event of any claim or suit against the Government on account of any alleged patent or copyright infringement arising out of the performance of this contract or out of the use of any supplies furnished or work or services performed under this contract, the Contractor shall furnish to the Government, when requested by the Contracting Officer, all evidence and information in possession of the Contractor pertaining to such suit or claim. Such evidence and information shall be furnished at the expense of the Government except where the Contractor has agreed to indemnify the Government.

(c) The Contractor agrees to include, and require inclusion of, this clause in all subcontracts at any tier for supplies or services (including construction and architect-engineer subcontracts and those for material, supplies, models, samples, or design or testing services) expected to exceed the simplified acquisition threshold at (FAR) 2.101.to exceed the dollar amount set forth in 13.000 of the Federal Acquisition Regulation (FAR).

(End of clause)

52.227-3 PATENT INDEMNITY (APR 1984)

(a) The Contractor shall indemnify the Government and its officers, agents, and employees against liability, including costs, for infringement of any United States patent (except a patent issued upon an application that is now or may hereafter be withheld from issue pursuant to a Secrecy Order under 35 U.S.C. 181) arising out of the manufacture or delivery of supplies, the performance of services, or the construction, alteration, modification, or repair of real property (hereinafter referred to as "construction work") under this contract, or out of the use or disposal by or for the account of the Government of such supplies or construction work.

(b) This indemnity shall not apply unless the Contractor shall have been informed as soon as practicable by the Government of the suit or action alleging such infringement and shall have been given such opportunity as is afforded by applicable laws, rules, or regulations to participate in its defense. Further, this indemnity shall not apply to (1) an infringement resulting from compliance with specific written instructions of the Contracting Officer directing a change in the supplies to be delivered or in the materials or equipment to be used, or directing a manner of performance of the contract not normally used by the Contractor, (2) an infringement resulting from addition to or change in supplies or components furnished or construction work performed that was made subsequent to delivery or performance, or (3) a claimed infringement that is unreasonably settled without the consent of the Contractor, unless required by final decree of a court of competent jurisdiction.

(End of clause)

52.229-3 FEDERAL, STATE, AND LOCAL TAXES (JAN 1991)

(a) "Contract date," as used in this clause, means the date set for bid opening or, if this is a negotiated contract or a modification, the effective date of this contract or modification.

"All applicable Federal, State, and local taxes and duties," as used in this clause, means all taxes and duties, in effect on the contract date, that the taxing authority is imposing and collecting on the transactions or property covered by this contract.

"After-imposed Federal tax," as used in this clause, means any new or increased Federal excise tax or duty, or tax that was exempted or excluded on the contract date but whose exemption was later revoked or reduced during the contract period, on the transactions or property covered by this contract that the Contractor is required to pay or bear as the result of legislative, judicial, or administrative action taking effect after the contract date. It does not include social security tax or other employment taxes.
"After-relieved Federal tax," as used in this clause, means any amount of Federal excise tax or duty, except social security or other employment taxes, that would otherwise have been payable on the transactions or property covered by this contract, but which the Contractor is not required to pay or bear, or for which the Contractor obtains a refund or drawback, as the result of legislative, judicial, or administrative action taking effect after the contract date.

(b) The contract price includes all applicable Federal, State, and local taxes and duties.

(c) The contract price shall be increased by the amount of any after-imposed Federal tax, provided the Contractor warrants in writing that no amount for such newly imposed Federal excise tax or duty or rate increase was included in the contract price, as a contingency reserve or otherwise.

(d) The contract price shall be decreased by the amount of any after-relieved Federal tax.

(e) The contract price shall be decreased by the amount of any Federal excise tax or duty, except social security or other employment taxes, that the Contractor is required to pay or bear, or does not obtain a refund of, through the Contractor's fault, negligence, or failure to follow instructions of the Contracting Officer.

(f) No adjustment shall be made in the contract price under this clause unless the amount of the adjustment exceeds $250.

(g) The Contractor shall promptly notify the Contracting Officer of all matters relating to any Federal excise tax or duty that reasonably may be expected to result in either an increase or decrease in the contract price and shall take appropriate action as the Contracting Officer directs.

(h) The Government shall, without liability, furnish evidence appropriate to establish exemption from any Federal, State, or local tax when the Contractor requests such evidence and a reasonable basis exists to sustain the exemption.

(End of clause)

52.229-5 TAXES--CONTRACTS PERFORMED IN U.S. POSSESSIONS OR PUERTO RICO (APR 1984)

The term "local taxes," as used in the Federal, State, and local taxes clause of this contract, includes taxes imposed by a possession of the United States or by Puerto Rico.

(End of clause)

52.232-1 PAYMENTS (APR 1984)

The Government shall pay the Contractor, upon the submission of proper invoices or vouchers, the prices stipulated in this contract for supplies delivered and accepted or services rendered and accepted, less any deductions provided in this contract. Unless otherwise specified in this contract, payment shall be made on partial deliveries accepted by the Government if--

(a) The amount due on the deliveries warrants it; or

(b) The Contractor requests it and the amount due on the deliveries is at least $1,000 or 50 percent of the total contract price.

52.232-8 DISCOUNTS FOR PROMPT PAYMENT (FEB 2002)

(a) Discounts for prompt payment will not be considered in the evaluation of offers. However, any offered discount will form a part of the award, and will be taken if payment is made within the discount period indicated in the offer by the offeror. As an alternative to offering a discount for prompt payment in conjunction with the offer, offerors awarded contracts may include discounts for prompt payment on individual invoices.

(b) In connection with any discount offered for prompt payment, time shall be computed from the date of the invoice. If the Contractor has not placed a date on the invoice, the due date shall be calculated from the date the designated billing office receives a proper invoice, provided the agency annotates such invoice with the date of receipt at the time of receipt. For the purpose of computing the discount earned, payment shall be considered to have been made on the date that appears on the payment check or, for an electronic funds transfer, the specified payment date. When the discount date falls on a Saturday, Sunday, or legal holiday when Federal Government offices are closed and Government business is not expected to be conducted, payment may be made on the following business day.

(End of clause)

52.232-9 LIMITATION ON WITHHOLDING OF PAYMENTS (APR 1984)

If more than one clause or Schedule term of this contract authorizes the temporary withholding of amounts otherwise payable to the Contractor for supplies delivered or services performed, the total of the amounts withheld at any one time shall not exceed the greatest amount that may be withheld under any one clause or Schedule term at that time; provided, that this limitation shall not apply to--

(a) Withholdings pursuant to any clause relating to wages or hours of employees;

(b) Withholdings not specifically provided for by this contract;

(c) The recovery of overpayments; and

(d) Any other withholding for which the Contracting Officer determines that this limitation is inappropriate.

52.232-11 EXTRAS (APR 1984)

Except as otherwise provided in this contract, no payment for extras shall be made unless such extras and the price therefore have been authorized in writing by the Contracting Officer.

(End of clause)

52.232-17 INTEREST (JUNE 1996)

(a) Except as otherwise provided in this contract under a Price Reduction for Defective Cost or Pricing Data clause or a Cost Accounting Standards clause, all amounts that become payable by the Contractor to the Government under this contract (net of any applicable tax credit under the Internal Revenue Code (26 U.S.C. 1481)) shall bear simple interest from the date due until paid unless paid within 30 days of becoming due. The interest rate shall be the interest rate established by the Secretary of the Treasury as provided in Section 12 of the Contract Disputes Act of 1978 (Public Law 95-563), which is applicable to the period in which the amount becomes due, as provided in paragraph (b) of this clause, and then at the rate applicable for each six-month period as fixed by the Secretary until the amount is paid. reproduce, prepare derivative works, distribute copies to the public, and (b) Amounts shall be due at the earliest of the following dates:

(1) The date fixed under this contract.

(2) The date of the first written demand for payment consistent with this contract, including any demand resulting from a default termination.

(3) The date the Government transmits to the Contractor a proposed supplemental agreement to confirm completed negotiations establishing the amount of debt.

(4) If this contract provides for revision of prices, the date of written notice to the Contractor stating the amount of refund payable in connection with a pricing proposal or a negotiated pricing agreement not confirmed by contract modification.

(c) The interest charge made under this clause may be reduced under the procedures prescribed in 32.614-2 of the Federal Acquisition Regulation in effect on the date of this contract.

(End of clause)

52.232-23 ASSIGNMENT OF CLAIMS (JAN 1986)

(a) The Contractor, under the Assignment of Claims Act, as amended, 31 U.S.C. 3727, 41 U.S.C. 15 (hereafter referred to as "the Act"), may assign its rights to be paid amounts due or to become due as a result of the performance of this contract to a bank, trust company, or other financing institution, including any Federal lending agency. The assignee under such an assignment may thereafter further assign or reassign its right under the original assignment to any type of financing institution described in the preceding sentence.

(b) Any assignment or reassignment authorized under the Act and this clause shall cover all unpaid amounts payable under this contract, and shall not be made to more than one party, except that an assignment or reassignment may be made to one party as agent or trustee for two or more parties participating in the financing of this contract.

(c) The Contractor shall not furnish or disclose to any assignee under this contract any classified document (including this contract) or information related to work under this contract until the Contracting Officer authorizes such action in writing.

(End of clause)

52.232-25 PROMPT PAYMENT (FEB 2002)

Notwithstanding any other payment clause in this contract, the Government will make invoice payments under the terms and conditions specified in this clause. The Government considers payment as being made on the day a check is dated or the date of an electronic funds transfer (EFT). Definitions of pertinent terms are set forth in sections 2.101, 32.001, and 32.902 of the Federal Acquisition Regulation. All days referred to in this clause are calendar days, unless otherwise specified. (However, see paragraph (a)(4) of this clause concerning payments due on Saturdays, Sundays, and legal holidays.)

(a) Invoice payments--(1) Due date. (i) Except as indicated in paragraphs (a)(2) and (c) of this clause, the due date for making invoice payments by the designated payment office is the later of the following two events:

(A) The 30th day after the designated billing office receives a proper invoice from the Contractor (except as provided in paragraph (a)(1)(ii) of this clause).

(B) The 30th day after Government acceptance of supplies delivered or services performed. For a final invoice, when the payment amount is subject to contract settlement actions, acceptance is deemed to occur on the effective date of the contract settlement.

(ii) If the designated billing office fails to annotate the invoice with the actual date of receipt at the time of receipt, the invoice payment due date is the 30th day after the date of the Contractor's invoice, provided the designated billing office receives a proper invoice and there is no disagreement over quantity, quality, or Contractor compliance with contract requirements.

(2) Certain food products and other payments. (i) Due dates on Contractor invoices for meat, meat food products, or fish; perishable agricultural commodities; and dairy products, edible fats or oils, and food products prepared from edible fats or oils are--

(A) For meat or meat food products, as defined in section 2(a)(3) of the Packers and Stockyard Act of 1921 (7 U.S.C. 182(3)), and as further defined in Pub. L. 98-181, including any edible fresh or frozen poultry meat, any perishable poultry meat food product, fresh eggs, and any perishable egg product, as close as possible to, but not later than, the 7th day after product delivery.

(B) For fresh or frozen fish, as defined in section 204(3) of the Fish and Seafood Promotion Act of 1986 (16 U.S.C. 4003(3)), as close as possible to, but not later than, the 7th day after product delivery.

C) For perishable agricultural commodities, as defined in section 1(4) of the Perishable Agricultural Commodities Act of 1930 (7 U.S.C. 499a(4)), as close as possible to, but not later than, the 10th day after product delivery, unless another date is specified in the contract.

(D) For dairy products, as defined in section 111(e) of the Dairy Production Stabilization Act of 1983 (7 U.S.C. 4502(e)), edible fats or oils, and food products prepared from edible fats or oils, as close as possible to, but not later than, the 10th day after the date on which a proper invoice has been received. Liquid milk, cheese, certain processed cheese products, butter, yogurt, ice cream, mayonnaise, salad dressings, and other similar products, fall within this classification. Nothing in the Act limits this classification to refrigerated products. When questions arise regarding the proper classification of a specific product, prevailing industry practices will be followed in specifying a contract payment due date. The burden of proof that a classification of a specific product is, in fact, prevailing industry practice is upon the Contractor making the representation.

(ii) If the contract does not require submission of an invoice for payment (e.g., periodic lease payments), the due date will be as specified in the contract.

(3) Contractor's invoice. The Contractor shall prepare and submit invoices to the designated billing office specified in the contract. A proper invoice must include the items listed in paragraphs (a)(3)(i) through (a)(3)(x) of this clause. If the invoice does not comply with these requirements, the designated billing office will return it within 7 days after receipt (3 days for

meat, meat food products, or fish; 5 days for perishable agricultural commodities, dairy products, edible fats or oils, and food products prepared from edible fats or oils), with the reasons why it is not a proper invoice. The Government will take into account untimely notification when computing any interest penalty owed the Contractor.

(i) Name and address of the Contractor.

(ii) Invoice date and invoice number. (The Contractor should date invoices as close as possible to the date of the mailing or transmission.)

(iii) Contract number or other authorization for supplies delivered or services performed (including order number and contract line item number).

(iv) Description, quantity, unit of measure, unit price, and extended price of supplies delivered or services performed.

(v) Shipping and payment terms (e.g., shipment number and date of shipment, discount for prompt payment terms). Bill of lading number and weight of shipment will be shown for shipments on Government bills of lading.

(vi) Name and address of Contractor official to whom payment is to be sent (must be the same as that in the contract or in a proper notice of assignment).

(vii) Name (where practicable), title, phone number, and mailing address of person to notify in the event of a defective invoice.

(viii) Taxpayer Identification Number (TIN). The Contractor shall include its TIN on the invoice only if required elsewhere in this contract.

(ix) Electronic funds transfer (EFT) banking information.

(A) The Contractor shall include EFT banking information on the invoice only if required elsewhere in this contract.

(B) If EFT banking information is not required to be on the invoice, in order for the invoice to be a proper invoice, the Contractor shall have submitted correct EFT banking information in accordance with the applicable solicitation provision (e.g., 52.232-38, Submission of Electronic Funds Transfer Information with Offer), contract clause (e.g., 52.232-33, Payment by Electronic Funds Transfer--Central Contractor Registration, or 52.232-34, Payment by Electronic Funds Transfer--Other Than Central Contractor Registration), or applicable agency procedures.

(C) EFT banking information is not required if the Government waived the requirement to pay by EFT.

(x) Any other information or documentation required by the contract (e.g., evidence of shipment).

(4) Interest penalty. The designated payment office will pay an interest penalty automatically, without request from the Contractor, if payment is not made by the due date and the conditions listed in paragraphs (a)(4)(i) through (a)(4)(iii) of this clause are met, if applicable. However, when the due date falls on a Saturday, Sunday, or legal holiday, the designated payment office may make payment on the following working day without incurring a late payment interest penalty.

(i) The designated billing office received a proper invoice.

(ii) The Government processed a receiving report or other Government documentation authorizing payment, and there was no disagreement over quantity, quality, or Contractor compliance with any contract term or condition.

(iii) In the case of a final invoice for any balance of funds due the Contractor for supplies delivered or services performed, the amount was not subject to further contract settlement actions between the Government and the Contractor.

(5) Computing penalty amount. The Government will compute the interest penalty in accordance with the Office of Management and Budget prompt payment regulations at 5 CFR part 1315.

(i) For the sole purpose of computing an interest penalty that might be due the Contractor, Government acceptance is deemed to occur constructively on the 7th day (unless otherwise specified in this contract) after the Contractor delivers the supplies or performs the services in accordance with the terms and conditions of the contract, unless there is a disagreement over quantity, quality, or Contractor compliance with a contract provision. If actual acceptance occurs within the constructive acceptance period, the Government will base the determination of an interest penalty on the actual date of acceptance. The constructive acceptance requirement does not, however, compel Government officials to accept supplies or services, perform contract administration functions, or make payment prior to fulfilling their responsibilities.

(ii) The prompt payment regulations at 5 CFR 1315.10(c) do not require the Government to pay interest penalties if payment delays are due to disagreement between the Government and the Contractor over the payment amount or other issues involving contract compliance, or on amounts temporarily withheld or retained in accordance with the terms of the contract. The Government and the Contractor shall resolve claims involving disputes and any interest that may be payable in accordance with the clause at FAR 52.233-1, Disputes.

(6) Discounts for prompt payment. The designated payment office will pay an interest penalty automatically, without request from the Contractor, if the Government takes a discount for prompt payment improperly. The Government will calculate the interest penalty in accordance with the prompt payment regulations at 5 CFR part 1315.

(7) Additional interest penalty. (i) The designated payment office will pay a penalty amount, calculated in accordance with the prompt payment regulations at 5 CFR part 1315 in addition to the interest penalty amount only if--

(A) The Government owes an interest penalty of $1 or more;

(B) The designated payment office does not pay the interest penalty within 10 days after the date the invoice amount is paid; and

(C) The Contractor makes a written demand to the designated payment office for additional penalty payment, in accordance with paragraph (a)(7)(ii) of this clause, postmarked not later than 40 days after the invoice amount is paid.

(ii)(A) The Contractor shall support written demands for additional penalty payments with the following data. The Government will not request any additional data. The Contractor shall--

(1) Specifically assert that late payment interest is due under a specific invoice, and request payment of all overdue late payment interest penalty and such additional penalty as may be required;

(2) Attach a copy of the invoice on which the unpaid late payment interest is due; and

(3) State that payment of the principal has been received, including the date of receipt.

(B) If there is no postmark or the postmark is illegible--

(1) The designated payment office that receives the demand will annotate it with the date of receipt, provided the demand is received on or before the 40th day after payment was made; or

(2) If the designated payment office fails to make the required annotation, the Government will determine the demand's validity based on the date the Contractor has placed on the demand, provided such date is no later than the 40th day after payment was made.

(iii) The additional penalty does not apply to payments regulated by other Government regulations (e.g., payments under utility contracts subject to tariffs and regulation).

(b) Contract financing payment. If this contract provides for contract financing, the Government will make contract financing payments in accordance with the applicable contract financing clause.

(c) Fast payment procedure due dates. If this contract contains the clause at 52.213-1, Fast Payment Procedure, payments will be made within 15 days after the date of receipt of the invoice.

(d) Overpayments. If the Contractor becomes aware of a duplicate payment or that the Government has otherwise overpaid on an invoice payment, the Contractor shall immediately notify the Contracting Officer and request instructions for disposition of the overpayment.

(End of clause)

52.232-33 PAYMENT BY ELECTRONIC FUNDS TRANSFER—CENTRAL CONTRACTOR REGISTRATION (MAY 1999)

(a) Method of payment. (1) All payments by the Government under this contract shall be made by electronic funds transfer (EFT), except as provided in paragraph (a)(2) of this clause. As used in this clause, the term “EFT” refers to the funds transfer and may also include the payment information transfer.

(2) In the event the Government is unable to release one or more payments by EFT, the Contractor agrees to either--

(i) Accept payment by check or some other mutually agreeable method of payment; or

(ii) Request the Government to extend the payment due date until such time as the Government can make payment by EFT (but see paragraph (d) of this clause).

(b) Contractor's EFT information. The Government shall make payment to the Contractor using the EFT information contained in the Central Contractor Registration (CCR) database. In the event that the EFT information changes, the Contractor shall be responsible for providing the updated information to the CCR database.

(c) Mechanisms for EFT payment. The Government may make payment by EFT through either the Automated Clearing House (ACH) network, subject to the rules of the National Automated Clearing House Association, or the Fedwire Transfer System. The rules governing Federal payments through the ACH are contained in 31 CFR part 210.

(d) Suspension of payment. If the Contractor's EFT information in the CCR database is incorrect, then the Government need not make payment to the Contractor under this contract until correct EFT information is entered into the CCR database; and any invoice or contract financing request shall be deemed not to be a proper invoice for the purpose of prompt payment under this contract. The prompt payment terms of the contract regarding notice of an improper invoice and delays in accrual of interest penalties apply.

(e) Contractor EFT arrangements. If the Contractor has identified multiple payment receiving points (i.e., more than one remittance address and/or EFT information set) in the CCR database, and the Contractor has not notified the Government of the payment receiving point applicable to this contract, the Government shall make payment to the first payment receiving point (EFT information set or remittance address as applicable) listed in the CCR database.

(f) Liability for uncompleted or erroneous transfers. (1) If an uncompleted or erroneous transfer occurs because the Government used the Contractor's EFT information incorrectly, the Government remains responsible for--

(i) Making a correct payment;

(ii) Paying any prompt payment penalty due; and

(iii) Recovering any erroneously directed funds.

(2) If an uncompleted or erroneous transfer occurs because the Contractor's EFT information was incorrect, or was revised within 30 days of Government release of the EFT payment transaction instruction to the Federal Reserve System, and--

(i) If the funds are no longer under the control of the payment office, the Government is deemed to have made payment and the Contractor is responsible for recovery of any erroneously directed funds; or

(ii) If the funds remain under the control of the payment office, the Government shall not make payment, and the provisions of paragraph (d) of this clause shall apply.

(g) EFT and prompt payment. A payment shall be deemed to have been made in a timely manner in accordance with the prompt payment terms of this contract if, in the EFT payment transaction instruction released to the Federal Reserve System, the date specified for settlement of the payment is on or before the prompt payment due date, provided the specified payment date is a valid date under the rules of the Federal Reserve System.

(h) EFT and assignment of claims. If the Contractor assigns the proceeds of this contract as provided for in the assignment of claims terms of this contract, the Contractor shall require as a condition of any such assignment, that the assignee shall register in the CCR database and shall be paid by EFT in accordance with the terms of this clause. In all respects, the requirements of this clause shall apply to the assignee as if it were the Contractor. EFT information that shows the ultimate recipient of the transfer to be other than the Contractor, in the absence of a proper assignment of claims acceptable to the Government, is incorrect EFT information within the meaning of paragraph (d) of this clause.

(i) Liability for change of EFT information by financial agent. The Government is not liable for errors resulting from changes to EFT information made by the Contractor's financial agent.

(j) Payment information. The payment or disbursing office shall forward to the Contractor available payment information that is suitable for transmission as of the date of release of the EFT instruction to the Federal Reserve System. The Government may request the Contractor to designate a desired format and method(s) for delivery of payment information from a list of formats and methods the payment office is capable of executing. However, the Government does not guarantee that any particular format or method of delivery is available at any particular payment office and retains the latitude to use the format and delivery method most convenient to the Government. If the Government makes payment by check in accordance with paragraph (a) of this clause, the Government shall mail the payment information to the remittance address contained in the CCR database.

(End of Clause)

52.233-1 DISPUTES. (DEC 1998)

(a) This contract is subject to the Contract Disputes Act of 1978, as amended (41 U.S.C. 601-613).

(b) Except as provided in the Act, all disputes arising under or relating to this contract shall be resolved under this clause.

(c) "Claim," as used in this clause, means a written demand or written assertion by one of the contracting parties seeking, as a matter of right, the payment of money in a sum certain, the adjustment or interpretation of contract terms, or other relief arising under or relating to this contract. A claim arising under a contract, unlike a claim relating to that contract, is a claim that can be resolved under a contract clause that provides for the relief sought by the claimant. However, a written demand or written assertion by the Contractor seeking the payment of money exceeding $100,000 is not a claim under the Act until certified as required by subparagraph (d)(2) of this clause. A voucher, invoice, or other routine request for payment that is not in dispute when submitted is not a claim under the Act. The submission may be converted to a claim under the Act, by complying with the submission and certification requirements of this clause, if it is disputed either as to liability or amount or is not acted upon in a reasonable time.

(d)(1) A claim by the Contractor shall be made in writing and, unless otherwise stated in this contract, submitted within 6 years after accrual of the claim to the Contracting Officer for a written decision. A claim by the Government against the Contractor shall be subject to a written decision by the Contracting Officer.

(2)(i) The contractors shall provide the certification specified in subparagraph (d)(2)(iii) of this clause when submitting any claim -

(A) Exceeding $100,000; or

(B) Regardless of the amount claimed, when using -

(1) Arbitration conducted pursuant to 5 U.S.C. 575-580; or

(2) Any other alternative means of dispute resolution (ADR) technique that the agency elects to handle in accordance with the Administrative Dispute Resolution Act (ADRA).

(ii) The certification requirement does not apply to issues in controversy that have not been submitted as all or part of a claim.

(iii) The certification shall state as follows: "I certify that the claim is made in good faith; that the supporting data are accurate and complete to the best of my knowledge and belief; that the amount requested accurately reflects the contract adjustment for which the Contractor believes the Government is liable; and that I am duly authorized to certify the claim on behalf of the Contractor.

(3) The certification may be executed by any person duly authorized to bind the Contractor with respect to the claim.

(e) For Contractor claims of $100,000 or less, the Contracting Officer must, if requested in writing by the Contractor, render a decision within 60 days of the request. For Contractor-certified claims over $100,000, the Contracting Officer must, within 60 days, decide the claim or notify the Contractor of the date by which the decision will be made.

(f) The Contracting Officer's decision shall be final unless the Contractor appeals or files a suit as provided in the Act.

(g) If the claim by the Contractor is submitted to the Contracting Officer or a claim by the Government is presented to the Contractor, the parties, by mutual consent, may agree to use alternative disput resolution (ADR). If the Contractor refuses an offer for ADR, the Contractor shall inform the Contracting Officer, in writing, of the Contractor's specific reasons for rejecting the request.

(h) The Government shall pay interest on the amount found due and unpaid from (1) the date the Contracting Officer receives the claim (certified, if required); or (2) the date that payment otherwise would be due, if that date is later, until the date of payment. With regard to claims having defective certifications, as defined in (FAR) 48 CFR 33.201, interest shall be paid from the date that the Contracting Officer initially receives the claim. Simple interest on claims shall be paid at the rate, fixed by the Secretary of the Treasury as provided in the Act, which is applicable to the period during which the Contracting Officer receives the claim and then at the rate applicable for each 6-month period as fixed by the Treasury Secretary during the pendency of the claim.

(i) The Contractor shall proceed diligently with performance of this contract, pending final resolution of any request for relief, claim, appeal, or action arising under the contract, and comply with any decision of the Contracting Officer.

(End of clause)

52.233-3 PROTEST AFTER AWARD (AUG. 1996)

(a) Upon receipt of a notice of protest (as defined in FAR 33.101) or a determination that a protest is likely (see FAR 33.102(d)), the Contracting Officer may, by written order to the Contractor, direct the Contractor to stop performance of the work called for by this contract. The order shall be specifically identified as a stop-work order issued under this clause. Upon receipt of the order, the Contractor shall immediately comply with its terms and take all reasonable steps to minimize the incurrence of costs allocable to the work covered by the order during the period of work stoppage. Upon receipt of the final decision in the protest, the Contracting Officer shall either--

(1) Cancel the stop-work order; or

(2) Terminate the work covered by the order as provided in the Default, or the Termination for Convenience of the Government, clause of this contract.

(b) If a stop-work order issued under this clause is canceled either before or after a final decision in the protest, the Contractor shall resume work. The Contracting Officer shall make an equitable adjustment in the delivery schedule or contract price, or both, and the contract shall be modified, in writing, accordingly, if--

(1) The stop-work order results in an increase in the time required for, or in the Contractor's cost properly allocable to, the performance of any part of this contract; and

(2) The Contractor asserts its right to an adjustment within 30 days after the end of the period of work stoppage; provided, that if the Contracting Officer decides the facts justify the action, the Contracting Officer may receive and act upon a proposal at any time before final payment under this contract.

(c) If a stop-work order is not canceled and the work covered by the order is terminated for the convenience of the Government, the Contracting Officer shall allow reasonable costs resulting from the stop-work order in arriving at the termination settlement.

(d) If a stop-work order is not canceled and the work covered by the order is terminated for default, the Contracting Officer shall allow, by equitable adjustment or otherwise, reasonable costs resulting from the stop-work order.

(e) The Government's rights to terminate this contract at any time are not affected by action taken under this clause.

(f) If, as the result of the Contractor's intentional or negligent misstatement, misrepresentation, or miscertification, a protest related to this contract is sustained, and the Government pays costs, as provided in FAR 33.102(b)(2) or 33.104(h)(1), the Government may require the Contractor to reimburse the Government the amount of such costs. In addition to any other remedy available, and pursuant to the requirements of Subpart 32.6, the Government may collect this debt by offsetting the amount against any payment due the Contractor under any contract between the Contractor and the Government.

(End of clause)

52.239-1 PRIVACY OR SECURITY SAFEGUARDS (AUG 1996)

(a) The Contractor shall not publish or disclose in any manner, without the Contracting Officer's written consent, the details of any safeguards either designed or developed by the Contractor under this contract or otherwise provided by the Government.-

(b) To the extent required to carry out a program of inspection to safeguard against threats and hazards to the security, integrity, and confidentiality of Government data, the Contractor shall afford the Government access to the Contractor's facilities, installations, technical capabilities,

operations, documentation, records, and databases.-

(c) If new or unanticipated threats or hazards are discovered by either the Government or the Contractor, or if existing safeguards have ceased to function, the discoverer shall immediately bring the situation to the attention of the other party.

(End of clause)

52.242-13 BANKRUPTCY (JUL 1995)

In the event the Contractor enters into proceedings relating to bankruptcy, whether voluntary or involuntary, the Contractor agrees to furnish, by certified mail or electronic commerce method authorized by the contract, written notification of the bankruptcy to the Contracting Officer responsible for administering the contract. This notification shall be furnished within five days of the initiation of the proceedings relating to bankruptcy filing. This notification shall include the date on which the bankruptcy petition was filed, the identity of the court in which the bankruptcy petition was filed, and a listing of Government contract numbers and contracting offices for all Government contracts against which final payment has not been made. This obligation remains in effect until final payment under this contract.

(End of clause)

52.242-17 GOVERNMENT DELAY OF WORK (APR 1984)

(a) If the performance of all or any part of the work of this contract is delayed or interrupted (1) by an act of the Contracting Officer in the administration of this contract that is not expressly or impliedly authorized by this contract, or (2) by a failure of the Contracting Officer to act within the time specified in this contract, or within a reasonable time if not specified, an adjustment (excluding profit) shall be made for any increase in the cost of performance of this contract caused by the delay or interruption and the contract shall be modified in writing accordingly. Adjustment shall also be made in the delivery or performance dates and any other contractual term or condition affected by the delay or interruption. However, no adjustment shall be made under this clause for any delay or interruption to the extent that performance would have been delayed or interrupted by any other cause, including the fault or negligence of the Contractor, or for which an adjustment is provided or excluded under any other term or condition of this contract.

(b) A claim under this clause shall not be allowed (1) for any costs incurred more than 20 days before the Contractor shall have notified the Contracting Officer in writing of the act or failure to act involved, and (2) unless the claim, in an amount stated, is asserted in writing as soon as practicable after the termination of the delay or interruption, but not later than the day of final payment under the contract.

(End of clause)

52.243-1 CHANGES--FIXED-PRICE (AUG 1987)

(a) The Contracting Officer may at any time, by written order, and without notice to the sureties, if any, make changes within the general scope of this contract in any one or more of the following:

(1) Drawings, designs, or specifications when the supplies to be furnished are to be specially manufactured for the Government in accordance with the drawings, designs, or specifications.

(2) Method of shipment or packing.

(3) Place of delivery.

(b) If any such change causes an increase or decrease in the cost of, or the time required for, performance of any part of the work under this contract, whether or not changed by the order, the Contracting Officer shall make an equitable adjustment in the contract price, the delivery schedule, or both, and shall modify the contract.

(c) The Contractor must assert its right to an adjustment under this clause within 30 days from the date of receipt of the written order. However, if the Contracting Officer decides that the facts justify it, the Contracting Officer may receive and act upon a proposal submitted before final payment of the contract.

(d) If the Contractor's proposal includes the cost of property made obsolete or excess by the change, the Contracting Officer shall have the right to prescribe the manner of the disposition of the property.

(e) Failure to agree to any adjustment shall be a dispute under the Disputes clause. However, nothing in this clause shall excuse the Contractor from proceeding with the contract as changed.

(End of clause)

52.244-5 COMPETITION IN SUBCONTRACTING (DEC 1996)

(a) The Contractor shall select subcontractors (including suppliers) on a competitive basis to the maximum practical extent consistent with the objectives and requirements of the contract.

(b) If the Contractor is an approved mentor under the Department of Defense Pilot Mentor-Protege Program (Pub. L. 101–510, section 831 as amended), the Contractor may award subcontracts under this contract on a noncompetitive basis to its proteges.

(End of clause)

52.244-6 SUBCONTRACTS FOR COMMERCIAL ITEMS (MAY 2002)

(a) Definitions. As used this clause--

"Commercial item", has the meaning contained in the clause at 52.202-1, Definitions.

"Subcontract", includes a transfer of commercial items between divisions, subsidiaries, or affiliates of the Contractor or subcontractor at any tier.

(b) To the maximum extent practicable, the Contractor shall incorporate, and require its subcontractors at all tiers to incorporate, commercial items or nondevelopmental items as components of items to be supplied under this contract.

(c)(1) The Contractor shall insert the following clauses in subcontracts for commercial items:

(i) 52.219-8, Utilization of Small Business Concerns (OCT 2000) (15 U.S.C. 637(d)(2) and (3)), in all subcontracts that offer further subcontracting opportunities. If the subcontract (except subcontracts to small business concerns) exceeds $500,000 ($1,000,000 for construction of any public facility), the subcontractor must include 52.219-8 in lower tier subcontracts that offer subcontracting opportunities.

(ii) 52.222-26, Equal Opportunity (APR 2002) (E.O. 11246).

(iii) 52.222-35, Equal Opportunity for Special Disabled Veterans, Veterans of the Vietnam Era and Other Eligible Veterans (DEC 2001) (38 U.S.C. 4212(a)).

(iv) 52.222-36, Affirmative Action for Workers with Disabilities (JUN 1998) (29 U.S.C. 793).

(v) 52.247-64, Preference for Privately Owned U.S.-Flag Commercial Vessels (JUN 2000) (46 U.S.C. Appx 1241) (flowdown not required for subcontracts awarded beginning May 1, 1996).

(2) While not required, the Contractor may flow down to subcontracts for commercial items a minimal number of additional clauses necessary to satisfy its contractual obligations.

(d) The Contractor shall include the terms of this clause, including this paragraph (d), in subcontracts awarded under this contract.

(End of clause)

52.245-2 GOVERNMENT PROPERTY (FIXED-PRICE CONTRACTS) (DEC 1989)

(a) Government-furnished property. (1) The Government shall deliver to the Contractor, for use in connection with and under the terms of this contract, the Government-furnished property described in the Schedule or specifications together with any related data and information that the Contractor may request and is reasonably required for the intended use of the property (hereinafter referred to as "Government-furnished property").

(2) The delivery or performance dates for this contract are based upon the expectation that Government-furnished property suitable for use (except for property furnished "as is") will be

delivered to the Contractor at the times stated in the Schedule or, if not so stated, in sufficient time to enable the Contractor to meet the contract's delivery or performance dates.

(3) If Government-furnished property is received by the Contractor in a condition not suitable for the intended use, the Contractor shall, upon receipt of it, notify the Contracting Officer, detailing the facts, and, as directed by the Contracting Officer and at Government expense, either repair, modify, return, or otherwise dispose of the property. After completing the directed action and upon written request of the Contractor, the Contracting Officer shall make an equitable adjustment as provided in paragraph (h) of this clause.

(4) If Government-furnished property is not delivered to the Contractor by the required time, the Contracting Officer shall, upon the Contractor's timely written request, make a determination of the delay, if any, caused the Contractor and shall make an equitable adjustment in accordance with paragraph (h) of this clause.

(b) Changes in Government-furnished property. (1) The Contracting Officer may, by written notice, (i) decrease the Government-furnished property provided or to be provided under this contract, or (ii) substitute other Government-furnished property for the property to be provided by the Government, or to be acquired by the Contractor for the Government, under this contract. The Contractor shall promptly take such action as the Contracting Officer may direct regarding the removal, shipment, or disposal of the property covered by such notice.

(2) Upon the Contractor's written request, the Contracting Officer shall make an equitable adjustment to the contract in accordance with paragraph (h) of this clause, if the Government has agreed in the Schedule to make the property available for performing this contract and there is any--

(i) Decrease or substitution in this property pursuant to subparagraph (b)(1) of this clause; or

(ii) Withdrawal of authority to use this property, if provided under any other contract or lease.

(c) Title in Government property. (1) The Government shall retain title to all Government-furnished property.

(2) All Government-furnished property and all property acquired by the Contractor, title to which vests in the Government under this paragraph (collectively referred to as "Government property"), are subject to the provisions of this clause. However, special tooling accountable to this contract is subject to the provisions of the Special Tooling clause and is not subject to the provisions of this clause. Title to Government property shall not be affected by its incorporation into or attachment to any property not owned by the Government, nor shall Government property become a fixture or lose its identity as personal property by being attached to any real property.

(3) Title to each item of facilities and special test equipment acquired by the Contractor for the Government under this contract shall pass to and vest in the Government when its use in performing this contract commences or when the Government has paid for it, whichever is earlier, whether or not title previously vested in the Government.

(4) If this contract contains a provision directing the Contractor to purchase material for which the Government will reimburse the Contractor as a direct item of cost under this contract--

(i) Title to material purchased from a vendor shall pass to and vest in the Government upon the vendor's delivery of such material; and

(ii) Title to all other material shall pass to and vest in the Government upon--

(A) Issuance of the material for use in contract performance;

(B) Commencement of processing of the material or its use in contract performance; or

(C) Reimbursement of the cost of the material by the Government, whichever occurs first.

(d) Use of Government property. The Government property shall be used only for performing this contract, unless otherwise provided in this contract or approved by the Contracting Officer.

(e) Property administration. (1) The Contractor shall be responsible and accountable for all Government property provided under this contract and shall comply with Federal Acquisition Regulation (FAR) Subpart 45.5, as in effect on the date of this contract.

(2) The Contractor shall establish and maintain a program for the use, maintenance, repair, protection, and preservation of Government property in accordance with sound industrial practice and the applicable provisions of Subpart 45.5 of the FAR.

(3) If damage occurs to Government property, the risk of which has been assumed by the Government under this contract, the Government shall replace the items or the Contractor shall make such repairs as the Government directs. However, if the Contractor cannot effect such repairs within the time required, the Contractor shall dispose of the property as directed by the Contracting Officer. When any property for which the Government is responsible is replaced or repaired, the Contracting Officer shall make an equitable adjustment in accordance with paragraph (h) of this clause.

(4) The Contractor represents that the contract price does not include any amount for repairs or replacement for which the Government is responsible. Repair or replacement of property for which the Contractor is responsible shall be accomplished by the Contractor at its own expense.

(f) Access. The Government and all its designees shall have access at all reasonable times to the premises in which any Government property is located for the purpose of inspecting the Government property.

(g) Risk of loss. Unless otherwise provided in this contract, the Contractor assumes the risk of, and shall be responsible for, any loss or destruction of, or damage to, Government property upon its delivery to the Contractor or upon passage of title to the Government under paragraph (c) of this clause. However, the Contractor is not responsible for reasonable wear and tear to

Government property or for Government property properly consumed in performing this contract.

(h) Equitable adjustment. When this clause specifies an equitable adjustment, it shall be made to any affected contract provision in accordance with the procedures of the Changes clause. When appropriate, the Contracting Officer may initiate an equitable adjustment in favor of the Government. The right to an equitable adjustment shall be the Contractor's exclusive remedy. The Government shall not be liable to suit for breach of contract for--

(1) Any delay in delivery of Government-furnished property;

(2) Delivery of Government-furnished property in a condition not suitable for its intended use;

(3) A decrease in or substitution of Government-furnished property; or

(4) Failure to repair or replace Government property for which the Government is responsible.

(i) Final accounting and disposition of Government property. Upon completing this contract, or at such earlier dates as may be fixed by the Contracting Officer, the Contractor shall submit, in a form acceptable to the Contracting Officer, inventory schedules covering all items of Government property (including any resulting scrap) not consumed in performing this contract or delivered to the Government. The Contractor shall prepare for shipment, deliver f.o.b. origin, or dispose of the Government property as may be directed or authorized by the Contracting Officer. The net proceeds of any such disposal shall be credited to the contract price or shall be paid to the Government as the Contracting Officer directs.

(j) Abandonment and restoration of Contractor's premises. Unless otherwise provided herein, the Government--

(1) May abandon any Government property in place, at which time all obligations of the Government regarding such abandoned property shall cease; and

(2) Has no obligation to restore or rehabilitate the Contractor's premises under any circumstances (e.g., abandonment, disposition upon completion of need, or upon contract completion). However, if the Government-furnished property (listed in the Schedule or specifications) is withdrawn or is unsuitable for the intended use, or if other Government property is substituted, then the equitable adjustment under paragraph (h) of this clause may properly include restoration or rehabilitation costs.

(k) Communications. All communications under this clause shall be in writing.

(l) Overseas contracts. If this contract is to be performed outside of the United States of America, its territories, or possessions, the words "Government" and "Government-furnished" (wherever they appear in this clause) shall be construed as "United States Government" and "United States Government-furnished," respectively.

(End of clause)

52.246-2 INSPECTION OF SUPPLIES--FIXED-PRICE (AUG 1996)

(a) Definition. "Supplies," as used in this clause, includes but is not limited to raw materials, components, intermediate assemblies, end products, and lots of supplies.

(b) The Contractor shall provide and maintain an inspection system acceptable to the Government covering supplies under this contract and shall tender to the Government for acceptance only supplies that have been inspected in accordance with the inspection system and have been found by the Contractor to be in conformity with contract requirements. As part of the system, the Contractor shall prepare records evidencing all inspections made under the system and the outcome. These records shall be kept complete and made available to the Government during contract performance and for as long afterwards as the contract requires. The Government may perform reviews and evaluations as reasonably necessary to ascertain compliance with this paragraph. These reviews and evaluations shall be conducted in a manner that will not unduly delay the contract work. The right of review, whether exercised or not, does not relieve the Contractor of the obligations under the contract.

(c) The Government has the right to inspect and test all supplies called for by the contract, to the extent practicable, at all places and times, including the period of manufacture, and in any event before acceptance. The Government shall perform inspections and tests in a manner that will not unduly delay the work. The Government assumes no contractual obligation to perform any inspection and test for the benefit of the Contractor unless specifically set forth elsewhere in this contract.

(d) If the Government performs inspection or test on the premises of the Contractor or a subcontractor, the Contractor shall furnish, and shall require subcontractors to furnish, at no increase in contract price, all reasonable facilities and assistance for the safe and convenient performance of these duties. Except as otherwise provided in the contract, the Government shall bear the expense of Government inspections or tests made at other than the Contractor's or subcontractor's premises; provided, that in case of rejection, the Government shall not be liable for any reduction in the value of inspection or test samples.

(e)(1) When supplies are not ready at the time specified by the Contractor for inspection or test, the Contracting Officer may charge to the Contractor the additional cost of inspection or test.

(2) The Contracting Officer may also charge the Contractor for any additional cost of inspection or test when prior rejection makes reinspection or retest necessary.

(f) The Government has the right either to reject or to require correction of nonconforming supplies. Supplies are nonconforming when they are defective in material or workmanship or are otherwise not in conformity with contract requirements. The Government may reject nonconforming supplies with or without disposition instructions.

(g) The Contractor shall remove supplies rejected or required to be corrected. However, the Contracting Officer may require or permit correction in place,promptly after notice, by and at the expense of the Contractor. The Contractor shall not tender for acceptance corrected or rejected supplies without disclosing the former rejection or requirement for correction, and, when required, shall disclose the corrective action taken.

(h) If the Contractor fails to promptly remove, replace, or correct rejected supplies that are required to be removed or to be replaced or corrected, the Government may either (1) by contract or otherwise, remove, replace, or correct the supplies and charge the cost to the Contractor or (2) terminate the contract for default. Unless the Contractor corrects or replaces the supplies within the delivery schedule, the Contracting Officer may require their delivery and make an equitable price reduction. Failure to agree to a price reduction shall be a dispute.

(i)(1) If this contract provides for the performance of Government quality assurance at source, and if requested by the Government, the Contractor shall furnish advance notification of the time (i) when Contractor inspection or tests will be performed in accordance with the terms and conditions of the contract and (ii) when the supplies will be ready for Government inspection.

(2) The Government's request shall specify the period and method of the advance notification and the Government representative to whom it shall be furnished. Requests shall not require more than 2 workdays of advance notification if the Government representative is in residence in the Contractor's plant, nor more than 7 workdays in other instances.

(j) The Government shall accept or reject supplies as promptly as practicable after delivery, unless otherwise provided in the contract. Government failure to inspect and accept or reject the supplies shall not relieve the Contractor from responsibility, nor impose liability on the Government, for nonconforming supplies.

(k) Inspections and tests by the Government do not relieve the Contractor of responsibility for defects or other failures to meet contract requirements discovered before acceptance. Acceptance shall be conclusive, except for latent defects, fraud, gross mistakes amounting to fraud, or as otherwise provided in the contract.

(l) If acceptance is not conclusive for any of the reasons in paragraph (k) hereof, the Government, in addition to any other rights and remedies provided by law, or under other provisions of this contract, shall have the right to require the Contractor (1) at no increase in contract price, to correct or replace the defective or nonconforming supplies at the original point of delivery or at the Contractor's plant at the Contracting Officer's election, and in accordance with a reasonable delivery schedule as may be agreed upon between the Contractor and the Contracting Officer; provided, that the Contracting Officer may require a reduction in contract price if the Contractor fails to meet such delivery schedule, or (2) within a reasonable time after receipt by the Contractor of notice of defects or nonconformance, to repay such portion of the contract as is equitable under the circumstances if the Contracting Officer elects not to require correction or replacement. When supplies are returned to the Contractor, the Contractor shall bear the transportation cost from the original point of delivery to the Contractor's plant and return

to the original point when that point is not the Contractor's plant. If the Contractor fails to perform or act as required in (1) or (2) above and does not cure such failure within a period of 10 days (or such longer period as the Contracting Officer may authorize in writing) after receipt of notice from the Contracting Officer specifying such failure, the Government shall have the right by contract or otherwise to replace or correct such supplies and charge to the Contractor the cost occasioned the Government thereby.

(End of clause)

52.246-18 WARRANTY OF SUPPLIES OF A COMPLEX NATURE (MAY 2001)

(a) Definitions. As used in this clause--

Acceptance means the act of an authorized representative of the Government by which the Government assumes for itself, or as an agent of another, ownership of existing and identified supplies, or approves specific services rendered, as partial or complete performance of the contract.

Supplies means the end items furnished by the Contractor and related services required under this contract. The word does not include ``data."

(b) Contractor's obligations. (1) The Contractor warrants that for one calendar year after final acceptance, all supplies furnished under this contract will be free from defects in material and workmanship and will conform with all requirements of this contract; provided, however, that with respect to Government-furnished property, the Contractor's warranty shall extend only to its proper installation, unless the Contractor performs some modification or other work on the property, in which case the Contractor's warranty shall extend to the modification or other work.

(2) Any supplies or parts thereof corrected or furnished in replacement shall be subject to the conditions of this clause to the same extent as supplies initially delivered. This warranty shall be equal in duration to that set forth in paragraph (b)(1) of this clause and shall run from the date of delivery of the corrected or replaced supplies.

(3) The Contractor shall not be obligated to correct or replace supplies if the facilities, tooling, drawings, or other equipment or supplies necessary to accomplish the correction or replacement have been made unavailable to the Contractor by action of the Government. In the event that correction or replacement has been directed, the Contractor shall promptly notify the Contracting Officer, in writing, of the nonavailability.

(4) The Contractor shall also prepare and furnish to the Government data and reports applicable to any correction required (including revision and updating of all affected data called for under this contract) at no increase in the contract price.

(5) When supplies are returned to the Contractor, the Contractor shall bear the transportation costs from the place of delivery specified in the contract (irrespective of the f.o.b. point or the point of acceptance) to the Contractor's plant and return.

(6) All implied warranties of merchantability and "fitness for a particular purpose" are excluded from any obligation contained in this contract.

(c) Remedies available to the Government. (1) In the event of a breach of the Contractor's warranty in paragraph (b)(1) of this clause, the Government may, at no increase in contract price--

(i) Require the Contractor, at the place of delivery specified in the contract (irrespective of the f.o.b. point or the point of acceptance) or at the Contractor's plant, to repair or replace, at the Contractor's election, defective or nonconforming supplies; or

(ii) Require the Contractor to furnish at the Contractor's plant the materials or parts and installation instructions required to successfully accomplish the correction.

(2) If the Contracting Officer does not require correction or replacement of defective or nonconforming supplies or the Contractor is not obligated to correct or replace under paragraph (b)(3) of this clause, the Government shall be entitled to an equitable reduction in the contract price.

(3) The Contracting Officer shall notify the Contractor in writing of any breach of the warranty in paragraph (b) of this clause within 30 calendar days of discovery. The Contractor shall submit to the Contracting Officer a written recommendation within 15 calendar days as to the corrective action required to remedy the breach. After the notice of breach, but not later than 10 calendar days after receipt of the Contractor's recommendation for corrective action, the Contracting Officer may, in writing, direct correction or replacement as in paragraph (c)(1) of this clause, and the Contractor shall, notwithstanding any disagreement regarding the existence of a breach of warranty, comply with this direction. If it is later determined that the Contractor did not breach the warranty in paragraph (b)(1) of this clause, the contract price will be equitably adjusted.

(4) If supplies are corrected or replaced, the period for notification of a breach of the Contractor's warranty in paragraph (c)(3) of this clause shall be 30 calendar days from the furnishing or return by the Contractor to the Government of the corrected or replaced supplies or parts thereof, or, if correction or replacement is effected by the Contractor at a Government or other activity, for 30 calendar days thereafter.

(5) The rights and remedies of the Government provided in this clause are in addition to and do not limit any rights afforded to the Government by any other clause of the contract.

(End of clause)

52.246-24 LIMITATION OF LIABILITY HIGH-VALUE ITEMS (FEB 1997)

(a) Except as provided in paragraphs (b) through (e) below, and notwithstanding any other provision of this contract, the Contractor shall not be liable for loss of or damage to property of the Government (including the supplies delivered under this contract) that (1) occurs after Government acceptance of the supplies delivered under this contract, and (2) results from any

defects or deficiencies in the supplies.

(b) The limitation of liability under paragraph (a) above shall not apply when a defect or deficiency in, or the Government's acceptance of, the supplies results from willful misconduct or lack of good faith on the part of any of the Contractor's managerial personnel. The term "Contractor's managerial personnel," as used in this clause, means the Contractor's directors, officers, and any of the Contractor's managers, superintendents, or equivalent representatives wb ho have supervision or direction of--

(1) All or substantially all of the Contractor's business;

(2) All or substantially all of the Contractor's operations at any one plant, laboratory, or separate location at which the contract is being performed; or

(3) A separate and complete major industrial operation connected with the performance of this contract.

(c) If the Contractor carries insurance, or has established a reserve for self-insurance, covering liability for loss or damage suffered by the Government through purchase or use of the supplies required to be delivered under this contract, the Contractor shall be liable to the Government, to the extent of such insurance or reserve, for loss of or damage to property of the Government occurring after Government acceptance of, and resulting from any defects or deficiencies in, the supplies delivered under this contract.

(d)(1) This clause does not diminish the Contractor's obligations, to the extent that they arise otherwise under this contract, relating to correction, repair, replacement, or other relief for any defect or deficiency in supplies delivered under this contract.

(2) Unless this is a cost-reimbursement contract, if loss or damage occurs and correction, repair, or replacement is not feasible or desired by the Government, the Contractor shall, as determined by the Contracting Officer--

(i) Pay the Government the amount it would have cost the Contractor to make correction, repair, or replacement before the loss or damage occurred; (ii) Provide other equitable relief.

(e) This clause shall not limit or otherwise affect the Government's rights under clauses, if included in this contract, that cover--

(1) Warranty of technical data;

(2) Ground and flight risks or aircraft flight risks; or

(3) Government property.

(End of clause)

52.248-1 VALUE ENGINEERING (FEB 2000)

(a) General. The Contractor is encouraged to develop, prepare, and submit value engineering change proposals (VECP's) voluntarily. The Contractor shall share in any net acquisition savings realized from accepted VECP's, in accordance with the incentive sharing rates in paragraph (f) below.

(b) Definitions. "Acquisition savings," as used in this clause, means savings resulting from the application of a VECP to contracts awarded by the same contracting office or its successor for essentially the same unit. Acquisition savings include--

(1) Instant contract savings, which are the net cost reductions on this, the instant contract, and which are equal to the instant unit cost reduction multiplied by the number of instant contract units affected by the VECP, less the Contractor's allowable development and implementation costs;

(2) Concurrent contract savings, which are net reductions in the prices of other contracts that are definitized and ongoing at the time the VECP is accepted; and

(3) Future contract savings, which are the product of the future unit cost reduction multiplied by the number of future contract units in the sharing base. On an instant contract, future contract savings include savings on increases in quantities after VECP acceptance that are due to contract modifications, exercise of options, additional orders, and funding of subsequent year requirements on a multiyear contract.

"Collateral costs," as used in this clause, means agency cost of operation, maintenance, logistic support, or Government-furnished property.

"Collateral savings," as used in this clause, means those measurable net reductions resulting from a VECP in the agency's overall projected collateral costs, exclusive of acquisition savings, whether or not the acquisition cost changes.

"Contracting office" includes any contracting office that the acquisition is transferred to, such as another branch of the agency or another agency's office that is performing a joint acquisition action.

"Contractor's development and implementation costs," as used in this clause, means those costs the Contractor incurs on a VECP specifically in developing, testing, preparing, and submitting the VECP, as well as those costs the Contractor incurs to make the contractual changes required by Government acceptance of a VECP.

"Future unit cost reduction," as used in this clause, means the instant unit cost reduction adjusted as the Contracting Officer considers necessary for projected learning or changes in quantity during the sharing period. It is calculated at the time the VECP is accepted and applies either (1) throughout the sharing period, unless the Contracting Officer decides that recalculation is

necessary because conditions are significantly different from those previously anticipated or (2) to the calculation of a lump-sum payment, which cannot later be revised.

"Government costs," as used in this clause, means those agency costs that result directly from developing and implementing the VECP, such as any net increases in the cost of testing, operations, maintenance, and logistics support. The term does not include the normal administrative costs of processing the VECP or any increase in this contract's cost or price resulting from negative instant contract savings.

"Instant contract," as used in this clause, means this contract, under which the VECP is submitted. It does not include increases in quantities after acceptance of the VECP that are due to contract modifications, exercise of options, or additional orders. If this is a multiyear contract, the term does not include quantities funded after VECP acceptance. If this contract is a fixed-price contract with prospective price redetermination, the term refers to the period for which firm prices have been established.

"Instant unit cost reduction" means the amount of the decrease in unit cost of performance (without deducting any Contractor's development or implementation costs) resulting from using the VECP on this, the instant contract. If this is a service contract, the instant unit cost reduction is normally equal to the number of hours per line-item task saved by using the VECP on this contract, multiplied by the appropriate contract labor rate.

"Negative instant contract savings" means the increase in the cost or price of this contract when the acceptance of a VECP results in an excess of the Contractor's allowable development and implementation costs over the product of the instant unit cost reduction multiplied by the number of instant contract units affected.

"Net acquisition savings" means total acquisition savings, including instant, concurrent, and future contract savings, less Government costs.

"Sharing base," as used in this clause, means the number of affected end items on contracts of the contracting office accepting the VECP.

Sharing period, as used in this clause, means the period beginning with acceptance of the first unit incorporating the VECP and ending at a calendar date or event determined by the contracting officer for each VECP.

"Unit," as used in this clause, means the item or task to which the Contracting Officer and the Contractor agree the VECP applies.

"Value engineering change proposal (VECP)" means a proposal that--

(1) Requires a change to this, the instant contract, to implement; and

(2) Results in reducing the overall projected cost to the agency without impairing essential functions or characteristics; provided, that it does not involve a change--

(i) In deliverable end item quantities only;

(ii) In research and development (R&D) end items or R&D test quantities that is due solely to results of previous testing under this contract; or

(iii) To the contract type only.

(c) VECP preparation. As a minimum, the Contractor shall include in each VECP the information described in subparagraphs (1) through (8) below. If the proposed change is affected by contractually required configuration management or similar procedures, the instructions in those procedures relating to format, identification, and priority assignment shall govern VECP preparation. The VECP shall include the following:

(1) A description of the difference between the existing contract requirement and the proposed requirement, the comparative advantages and disadvantages of each, a justification when an item's function or characteristics are being altered, the effect of the change on the end item's performance, and any pertinent objective test data.

(2) A list and analysis of the contract requirements that must be changed if the VECP is accepted, including any suggested specification revisions.

(3) Identification of the unit to which the VECP applies.

(4) A separate, detailed cost estimate for (i) the affected portions of the existing contract requirement and (ii) the VECP. The cost reduction associated with the VECP shall take into account the Contractor's allowable development and implementation costs, including any amount attributable to subcontracts under the Subcontracts paragraph of this clause, below.

(5) A description and estimate of costs the Government may incur in implementing the VECP, such as test and evaluation and operating and support costs.

(6) A prediction of any effects the proposed change would have on collateral costs to the agency.

(7) A statement of the time by which a contract modification accepting the VECP must be issued in order to achieve the maximum cost reduction, noting any effect on the contract completion time or delivery schedule.

(8) Identification of any previous submissions of the VECP, including the dates submitted, the agencies and contract numbers involved, and previous Government actions, if known.

(d) Submission. The Contractor shall submit VECP's to the Contracting Officer, unless this contract states otherwise. If this contract is administered by other than the contracting office, the Contractor shall submit a copy of the VECP simultaneously to the Contracting Officer and to the Administrative Contracting Officer.

(e) Government action. (1) The Contracting Officer will notify the Contractor of the status of the VECP within 45 calendar days after the contracting office receives it. If additional time is required, the Contracting Officer will notify the Contractor within the 45-day period and provide the reason for the delay and the expected date of the decision. The Government will process VECP's expeditiously; however, it shall not be liable for any delay in acting upon a VECP.

(2) If the VECP is not accepted, the Contracting Officer will notify the Contractor in writing, explaining the reasons for rejection. The Contractor may withdraw any VECP, in whole or in part, at any time before it is accepted by the Government. The Contracting Officer may require that the Contractor provide written notification before undertaking significant expenditures for VECP effort.

(3) Any VECP may be accepted, in whole or in part, by the Contracting Officer's award of a modification to this contract citing this clause and made either before or within a reasonable time after contract performance is completed. Until such a contract modification applies a VECP to this contract, the Contractor shall perform in accordance with the existing contract. The decision to accept or reject all or part of any VECP is a unilateral decision made solely at the discretion of the Contracting Officer.

(f) Sharing rates. If a VECP is accepted, the Contractor shall share in net acquisition savings according to the percentages shown in the table below. The percentage paid the Contractor depends upon (1) this contract's type (fixed-price, incentive, or cost-reimbursement), (2) the sharing arrangement specified in paragraph (a) above (incentive, program requirement, or a combination as delineated in the Schedule), and (3) the source of the savings (the instant contract, or concurrent and future contracts), as follows:

CONTRACTOR'S SHARE OF NET ACQUISITION SAVINGS
(Figures in percent)

Contract Type	Incentive (Voluntary)		Program Requirement (Mandatory)	
	Instant Contract Rate	Concurrent and Future Contract Rate	Instant Contract Rate	Concurrent and Future Contract Rate
Fixed-price (includes fixed-price-award-fee; excludes other fixed-price incentive contracts)	(1) 50	(1) 50	(1) 25	25
Incentive (fixed-price or cost) (other	(2)	(1) 50	(2)	25

than award fee)				
Cost-reimbursement (includes cost-plus-award-fee; excludes other cost-type incentive Contracts)	(3) 25	(3) 25	15	15

(1) The Contracting Officer may increase the Contractor's sharing rate to as high as 75 percent for each VECP.

(2) Same sharing arrangement as the contract's profit or fee adjustment formula.

(3) The Contracting Officer may increase the Contractor's sharing rate to as high as 50 percent for each VECP.

(g) Calculating net acquisition savings.

(1) Acquisition savings are realized when (i) the cost or price is reduced on the instant contract, (ii) reductions are negotiated in concurrent contracts, (iii) future contracts are awarded, or (iv) agreement is reached on a lump-sum payment for future contract savings (see subparagraph (i)(4) below). Net acquisition savings are first realized, and the Contractor shall be paid a share, when Government costs and any negative instant contract savings have been fully offset against acquisition savings.

(2) Except in incentive contracts, Government costs and any price or cost increases resulting from negative instant contract savings shall be offset against acquisition savings each time such savings are realized until they are fully offset. Then, the Contractor's share is calculated by multiplying net acquisition savings by the appropriate Contractor's percentage sharing rate (see paragraph (f) above). Additional Contractor shares of net acquisition savings shall be paid to the Contractor at the time realized.

(3) If this is an incentive contract, recovery of Government costs on the instant contract shall be deferred and offset against concurrent and future contract savings. The Contractor shall share through the contract incentive structure in savings on the instant contract items affected. Any negative instant contract savings shall be added to the target cost or to the target price and ceiling price, and the amount shall be offset against concurrent and future contract savings.

(4) If the Government does not receive and accept all items on which it paid the Contractor's share, the Contractor shall reimburse the Government for the proportionate share of these payments.

(h) Contract adjustment. The modification accepting the VECP (or a subsequent modification issued as soon as possible after any negotiations are completed) shall--

(1) Reduce the contract price or estimated cost by the amount of instant contract savings, unless this is an incentive contract;

(2) When the amount of instant contract savings is negative, increase the contract price, target price and ceiling price, target cost, or estimated cost by that amount;

(3) Specify the Contractor's dollar share per unit on future contracts, or provide the lump-sum payment;

(4) Specify the amount of any Government costs or negative instant contract savings to be offset in determining net acquisition savings realized from concurrent or future contract savings; and

(5) Provide the Contractor's share of any net acquisition savings under the instant contract in accordance with the following:

(i) Fixed-price contracts--add to contract price.

(ii) Cost-reimbursement contracts--add to contract fee.

(i) Concurrent and future contract savings.

(1) Payments of the Contractor's share of concurrent and future contract savings shall be made by a modification to the instant contract in accordance with subparagraph (h)(5) above. For incentive contracts, shares shall be added as a separate firm-fixed-price line item on the instant contract. The Contractor shall maintain records adequate to identify the first delivered unit for 3 years after final payment under this contract.

(2) The Contracting Officer shall calculate the Contractor's share of concurrent contract savings by (i) subtracting from the reduction in price negotiated on the concurrent contract any Government costs or negative instant contract savings not yet offset and (ii) multiplying the result by the Contractor's sharing rate.

(3) The Contracting Officer shall calculate the Contractor's share of future contract savings by (i) multiplying the future unit cost reduction by the number of future contract units scheduled for delivery during the sharing period, (ii) subtracting any Government costs or negative instant contract savings not yet offset, and (iii) multiplying the result by the Contractor's sharing rate.

(4) When the Government wishes and the Contractor agrees, the Contractor's share of future contract savings may be paid in a single lump sum rather than in a series of payments over time as future contracts are awarded. Under this alternate procedure, the future contract savings may be calculated when the VECP is accepted, on the basis of the Contracting Officer's forecast of the number of units that will be delivered during the sharing period. The Contractor's share shall be included in a modification to this contract (see subparagraph (h)(3) above) and shall not be subject to subsequent adjustment.

(5) Alternate no-cost settlement method. When, in accordance with subsection 48.104-4 of the Federal Acquisition Regulation, the Government and the Contractor mutually agree to use the no-cost settlement method, the following applies:

(i) The Contractor will keep all the savings on the instant contract and on its concurrent contracts only.

(ii) The Government will keep all the savings resulting from concurrent contracts placed on other sources, savings from all future contracts, and all collateral savings.

(j) Collateral savings. If a VECP is accepted, the Contracting Officer will increase the instant contract amount, as specified in paragraph (h)(5) of this clause, by a rate from 20 to 100 percent, as determined by the Contracting Officer, of any projected collateral savings determined to be realized in a typical year of use after subtracting any Government costs not previously offset. However, the Contractor's share of collateral savings will not exceed the contract's firm-fixed-price, target price, target cost, or estimated cost, at the time the VECP is accepted, or $100,000, whichever is greater. The Contracting Officer will be the sole determiner of the amount of collateral savings.

(k) Relationship to other incentives. Only those benefits of an accepted VECP not rewardable under performance, design-to-cost (production unit cost, operating and support costs, reliability and maintainability), or similar incentives shall be rewarded under this clause. However, the targets of such incentives affected by the VECP shall not be adjusted because of VECP acceptance. If this contract specifies targets but provides no incentive to surpass them, the value engineering sharing shall apply only to the amount of achievement better than target.

(l) Subcontracts. The Contractor shall include an appropriate value engineering clause in any subcontract of $100,000 or more and may include one in subcontracts of lesser value. In calculating any adjustment in this contract's price for instant contract savings (or negative instant contract savings), the Contractor's allowable development and implementation costs shall include any subcontractor's allowable development and implementation costs, and any value engineering incentive payments to a subcontractor, clearly resulting from a VECP accepted by the Government under this contract. The Contractor may choose any arrangement for subcontractor value engineering incentive payments; provided, that the payments shall not reduce the Government's share of concurrent or future contract savings or collateral savings.

(m) Data. The Contractor may restrict the Government's right to use any part of a VECP or the supporting data by marking the following legend on the affected parts:

"These data, furnished under the Value Engineering clause of contract . . . . . , shall not be disclosed outside the Government or duplicated, used, or disclosed, in whole or in part, for any purpose other than to evaluate a value engineering change proposal submitted under the clause. This restriction does not limit the Government's right to use information contained in these data if it has been obtained or is otherwise available from the Contractor or from another source without limitations."

If a VECP is accepted, the Contractor hereby grants the Government unlimited rights in the VECP and supporting data, except that, with respect to data qualifying and submitted as limited rights technical data, the Government shall have the rights specified in the contract modification implementing the VECP and shall appropriately mark the data. (The terms "unlimited rights" and "limited rights" are defined in Part 27 of the Federal Acquisition Regulation.)

(End of clause)

52.249-2 TERMINATION FOR CONVENIENCE OF THE GOVERNMENT (FIXED-PRICE) (SEP 1996)

(a) The Government may terminate performance of work under this contract in whole or, from time to time, in part if the Contracting Officer determines that a termination is in the Government's interest. The Contracting Officer shall terminate by delivering to the Contractor a Notice of Termination specifying the extent of termination and the effective date.

(b) After receipt of a Notice of Termination, and except as directed by the Contracting Officer, the Contractor shall immediately proceed with the following obligations, regardless of any delay in determining or adjusting any amounts due under this clause:

(1) Stop work as specified in the notice.

(2) Place no further subcontracts or orders (referred to as subcontracts in this clause) for materials, services, or facilities, except as necessary to complete the continued portion of the contract.

(3) Terminate all subcontracts to the extent they relate to the work terminated.

(4) Assign to the Government, as directed by the Contracting Officer, all right, title, and interest of the Contractor under the subcontracts terminated, in which case the Government shall have the right to settle or to pay any termination settlement proposal arising out of those terminations.

(5) With approval or ratification to the extent required by the Contracting Officer, settle all outstanding liabilities and termination settlement proposals arising from the termination of subcontracts; the approval or ratification will be final for purposes of this clause.

(6) As directed by the Contracting Officer, transfer title and deliver to the Government (i) the fabricated or unfabricated parts, work in process, completed work, supplies, and other material produced or acquired for the work terminated, and (ii) the completed or partially completed plans, drawings, information, and other property that, if the contract had been completed, would be required to be furnished to the Government.

(7) Complete performance of the work not terminated.

(8) Take any action that may be necessary, or that the Contracting Officer may direct, for the protection and preservation of the property related to this contract that is in the possession of the Contractor and in which the Government has or may acquire an interest.

(9) Use its best efforts to sell, as directed or authorized by the Contracting Officer, any property of the types referred to in subparagraph (b)(6) of this clause; provided, however, that the Contractor (i) is not required to extend credit to any purchaser and (ii) may acquire the property under the conditions prescribed by, and at prices approved by, the Contracting Officer. The proceeds of any transfer or disposition will be applied to reduce any payments to be made by the Government under this contract, credited to the price or cost of the work, or paid in any other manner directed by the Contracting Officer.

(c) The Contractor shall submit complete termination inventory schedules no later than 120 days from the effective date of termination, unless extended in writing by the Contracting Officer upon written request of the Contractor within this 120-day period.

(d) After expiration of the plant clearance period as defined in Subpart 45.6 of the Federal Acquisition Regulation, the Contractor may submit to the Contracting Officer a list, certified as to quantity and quality, of termination inventory not previously disposed of, excluding items authorized for disposition by the Contracting Officer. The Contractor may request the Government to remove those items or enter into an agreement for their storage. Within 15 days, the Government will accept title to those items and remove them or enter into a storage agreement. The Contracting Officer may verify the list upon removal of the items, or if stored, within 45 days from submission of the list, and shall correct the list, as necessary, before final settlement.

(e) After termination, the Contractor shall submit a final termination settlement proposal to the Contracting Officer in the form and with the certification prescribed by the Contracting Officer. The Contractor shall submit the proposal promptly, but no later than 1 year from the effective date of termination, unless extended in writing by the Contracting Officer upon written request of the Contractor within this 1-year period. However, if the Contracting Officer determines that the facts justify it, a termination settlement proposal may be received and acted on after 1 year or any extension. If the Contractor fails to submit the proposal within the time allowed, the Contracting Officer may determine, on the basis of information available, the amount, if any, due the Contractor because of the termination and shall pay the amount determined.

(f) Subject to paragraph (e) of this clause, the Contractor and the Contracting Officer may agree upon the whole or any part of the amount to be paid or remaining to be paid because of the termination. The amount may include a reasonable allowance for profit on work done. However, the agreed amount, whether under this paragraph (g) or paragraph (g) of this clause, exclusive of costs shown in subparagraph (g)(3) of this clause, may not exceed the total contract price as reduced by (1) the amount of payments previously made and (2) the contract price of work not terminated. The contract shall be modified, and the Contractor paid the agreed amount. Paragraph (g) of this clause shall not limit, restrict, or affect the amount that may be agreed upon to be paid under this paragraph.

(g) If the Contractor and the Contracting Officer fail to agree on the whole amount to be paid because of the termination of work, the Contracting Officer shall pay the Contractor the amounts determined by the Contracting Officer as follows, but without duplication of any amounts agreed on under paragraph (f) of this clause:

(1) The contract price for completed supplies or services accepted by the Government (or sold or acquired under subparagraph (b)(9) of this clause) not previously paid for, adjusted for any saving of freight and other charges.

(2) The total of--

(i) The costs incurred in the performance of the work terminated, including initial costs and preparatory expense allocable thereto, but excluding any costs attributable to supplies or services paid or to be paid under subparagraph (f)(1) of this clause;

(ii) The cost of settling and paying termination settlement proposals under terminated subcontracts that are properly chargeable to the terminated portion of the contract if not included in subdivision (g)(2)(i) of this clause; and

(iii) A sum, as profit on subdivision (g)(2)(i) of this clause, determined by the Contracting Officer under 49.202 of the Federal Acquisition Regulation, in effect on the date of this contract, to be fair and reasonable; however, if it appears that the Contractor would have sustained a loss on the entire contract had it been completed, the Contracting Officer shall allow no profit under this subdivision (iii) and shall reduce the settlement to reflect the indicated rate of loss.

(3) The reasonable costs of settlement of the work terminated, including--

(i) Accounting, legal, clerical, and other expenses reasonably necessary for the preparation of termination settlement proposals and supporting data;

(ii) The termination and settlement of subcontracts (excluding the amounts of such settlements); and

(iii) Storage, transportation, and other costs incurred, reasonably necessary for the preservation, protection, or disposition of the termination inventory.

(h) Except for normal spoilage, and except to the extent that the Government expressly assumed the risk of loss, the Contracting Officer shall exclude from the amounts payable to the Contractor under paragraph (g) of this clause, the fair value, as determined by the Contracting Officer, of property that is destroyed, lost, stolen, or damaged so as to become undeliverable to the Government or to a buyer.

(i) The cost principles and procedures of Part 31 of the Federal Acquisition Regulation, in effect on the date of this contract, shall govern all costs claimed, agreed to, or determined under this clause.

(j) The Contractor shall have the right of appeal, under the Disputes clause, from any determination made by the Contracting Officer under paragraph (e), (g), or (l) of this clause, except that if the Contractor failed to submit the termination settlement proposal or request for equitable adjustment within the time provided in paragraph (e) or (l), respectively, and failed to request a time extension, there is no right of appeal.

(k) In arriving at the amount due the Contractor under this clause, there shall be deducted--

(1) All unliquidated advance or other payments to the Contractor under the terminated portion of this contract;

(2) Any claim which the Government has against the Contractor under this contract; and

(3) The agreed price for, or the proceeds of sale of, materials, supplies, or other things acquired by the Contractor or sold under the provisions of this clause and not recovered by or credited to the Government.

(l) If the termination is partial, the Contractor may file a proposal with the Contracting Officer for an equitable adjustment of the price(s) of the continued portion of the contract. The Contracting Officer shall make any equitable adjustment agreed upon. Any proposal by the Contractor for an equitable adjustment under this clause shall be requested within 90 days from the effective date of termination unless extended in writing by the Contracting Officer.

(m)(1) The Government may, under the terms and conditions it prescribes, make partial payments and payments against costs incurred by the Contractor for the terminated portion of the contract, if the Contracting Officer believes the total of these payments will not exceed the amount to which the Contractor will be entitled.

(2) If the total payments exceed the amount finally determined to be due, the Contractor shall repay the excess to the Government upon demand, together with interest computed at the rate established by the Secretary of the Treasury under 50 U.S.C. App. 1215(b)(2). Interest shall be computed for the period from the date the excess payment is received by the Contractor to the date the excess is repaid. Interest shall not be charged on any excess payment due to a reduction in the Contractor's termination settlement proposal because of retention or other disposition of termination inventory until 10 days after the date of the retention or disposition, or a later date determined by the Contracting Officer because of the circumstances.

(n) Unless otherwise provided in this contract or by statute, the Contractor shall maintain all records and documents relating to the terminated portion of this contract for 3 years after final settlement. This includes all books and other evidence bearing on the Contractor's costs and expenses under this contract. The Contractor shall make these records and documents available to the Government, at the Contractor's office, at all reasonable times, without any direct charge. If approved by the Contracting Officer, photographs, microphotographs, or other authentic reproductions may be maintained instead of original records and documents.

(End of clause)

52.249-8 DEFAULT (FIXED-PRICE SUPPLY AND SERVICE) (APR 1984)

(a)(1) The Government may, subject to paragraphs (c) and (d) of this clause, by written notice of default to the Contractor, terminate this contract in whole or in part if the Contractor fails to--

(i) Deliver the supplies or to perform the services within the time specified in this contract or any extension;

(ii) Make progress, so as to endanger performance of this contract (but see subparagraph (a)(2) of this clause); or

(iii) Perform any of the other provisions of this contract (but see subparagraph (a)(2) below).

(2) The Government's right to terminate this contract under subdivisions (a)(1)(ii) and (1)(iii) of this clause, may be exercised if the Contractor does not cure such failure within 10 days (or more if authorized in writing by the Contracting Officer) after receipt of the notice from the Contracting Officer specifying the failure.

(b) If the Government terminates this contract in whole or in part, it may acquire, under the terms and in the manner the Contracting Officer considers appropriate, supplies or services similar to those terminated, and the Contractor will be liable to the Government for any excess costs for those supplies or services. However, the Contractor shall continue the work not terminated.

(c) Except for defaults of subcontractors at any tier, the Contractor shall not be liable for any excess costs if the failure to perform the contract arises from causes beyond the control and without the fault or negligence of the Contractor. Examples of such causes include (1) acts of God or of the public enemy, (2) acts of the Government in either its sovereign or contractual capacity, (3) fires, (4) floods, (5) epidemics, (6) quarantine restrictions, (7) strikes, (8) freight embargoes, and (9) unusually severe weather. In each instance the failure to perform must be beyond the control and without the fault or negligence of the Contractor.

(d) If the failure to perform is caused by the default of a subcontractor at any tier, and if the cause of the default is beyond the control of both the Contractor and subcontractor, and without the fault or negligence of either, the Contractor shall not be liable for any excess costs for failure to perform, unless the subcontracted supplies or services were obtainable from other sources in sufficient time for the Contractor to meet the required delivery schedule.

(e) If this contract is terminated for default, the Government may require the Contractor to transfer title and deliver to the Government, as directed by the Contracting Officer, any (1) completed supplies, and (2) partially completed supplies and materials, parts, tools, dies, jigs, fixtures, plans, drawings, information, and contract rights (collectively referred to as "manufacturing materials" in this clause) that the Contractor has specifically produced or acquired for the terminated portion of this contract. Upon direction of the Contracting Officer, the Contractor shall also protect and preserve property in its possession in which the Government has an interest.

(f) The Government shall pay contract price for completed supplies delivered and accepted. The Contractor and Contracting Officer shall agree on the amount of payment for manufacturing materials delivered and accepted and for the protection and preservation of the property. Failure to agree will be a dispute under the Disputes clause. The Government may withhold from these amounts any sum the Contracting Officer determines to be necessary to protect the Government against loss because of outstanding liens or claims of former lien holders.

(g) If, after termination, it is determined that the Contractor was not in default, or that the default was excusable, the rights and obligations of the parties shall be the same as if the termination had been issued for the convenience of the Government.

(h) The rights and remedies of the Government in this clause are in addition to any other rights and remedies provided by law or under this contract.

(End of clause)

52.253-1 COMPUTER GENERATED FORMS (JAN 1991)

(a) Any data required to be submitted on a Standard or Optional Form prescribed by the Federal Acquisition Regulation (FAR) may be submitted on a computer generated version of the form, provided there is no change to the name, content, or sequence of the data elements on the form, and provided the form carries the Standard or Optional Form number and edition date.

(b) Unless prohibited by agency regulations, any data required to be submitted on an agency unique form prescribed by an agency supplement to the FAR may be submitted on a computer generated version of the form provided there is no change to the name, content, or sequence of the data elements on the form and provided the form carries the agency form number and edition date.

(c) If the Contractor submits a computer generated version of a form that is different than the required form, then the rights and obligations of the parties will be determined based on the content of the required form.

(End of clause)

252.201-7000 CONTRACTING OFFICER'S REPRESENTATIVE (DEC 1991)

(a) "Definition. Contracting officer's representative" means an individual designated in accordance with subsection 201.602-2 of the Defense Federal Acquisition Regulation Supplement and authorized in writing by the contracting officer to perform specific technical or administrative functions.

(b) If the Contracting Officer designates a contracting officer's representative (COR), the Contractor will receive a copy of the written designation. It will specify the extent of the COR's authority to act on behalf of the contracting officer. The COR is not authorized to make any

commitments or changes that will affect price, quality, quantity, delivery, or any other term or condition of the contract.

(End of clause)

252.203-7001 PROHIBITION ON PERSONS CONVICTED OF FRAUD OR OTHER DEFENSE-CONTRACT-RELATED FELONIES (MAR 1999)

(a) Definitions. As used in this clause—

(1) "Arising out of a contract with the DoD" means any act in connection with—

(i) Attempting to obtain;

(ii) Obtaining, or

(iii) Performing a contract or first-tier subcontract of any agency, department, or component of the Department of Defense (DoD).

(2) "Conviction of fraud or any other felony" means any conviction for fraud or a felony in violation of state or Federal criminal statutes, whether entered on a verdict or plea, including a plea of *nolo contendere*, for which sentence has been imposed.

(3) "Date of conviction" means the date judgment was entered against the individual.

(b) Any individual who is convicted after September 29, 1988, of fraud or any other felony arising out of a contract with the DoD is prohibited from serving--

(1) In a management or supervisory capacity on any DoD contract or first-tier subcontract;

(2) On the board of directors of any DoD contractor or first-tier subcontractor;

(3) As a consultant, agent, or representative for any DoD contractor or first-tier subcontractor; or

(4) In any other capacity with the authority to influence, advise, or control the decisions of any DoD contractor or subcontractor with regard to any DoD contract or first-tier subcontract.

(c) Unless waived, the prohibition in paragraph (b) of this clause applies for not less than 5 years from the date of conviction.

(d) 10 U.S.C. 2408 provides that a defense contractor or first-tier subcontractor shall be subject to a criminal penalty of not more than $500,000 if convicted of knowingly—

(1) Employing a person under a prohibition specified in paragraph (b) of this clause; or

(2) Allowing such a person to serve on the board of directors of the contractor or first-tier subcontractor.

(e) In addition to the criminal penalties contained in 10 U.S.C. 2408, the Government may consider other available remedies, such as—

(1) Suspension or debarment;

(2) Cancellation of the contract at no cost to the Government; or

(3) Termination of the contract for default.

(f) The Contractor may submit written requests for waiver of the prohibition in paragraph (b) of this clause to the Contracting Officer. Requests shall clearly identify—

(1) The person involved;

(2) The nature of the conviction and resultant sentence or punishment imposed;

(3) The reasons for the requested waiver; and

(4) An explanation of why a waiver is in the interest of national security.

(g) The Contractor agrees to include the substance of this clause, appropriately modified to reflect the identity and relationship of the parties, in all first-tier subcontracts exceeding the simplified acquisition threshold in Part 2 of the Federal Acquisition Regulation, except those for commercial items or components.

(h) Pursuant to 10 U.S.C. 2408(c), defense contractors and subcontractors may obtain information as to whether a particular person has been convicted of fraud or any other felony arising out of a contract with the DoD by contacting The Office of Justice Programs, The Denial of Federal Benefits Office, U.S. Department of Justice, telephone (202) 616-3507.

(End of clause)

252.203-7002 DISPLAY OF DOD HOTLINE POSTER (DEC 1991)

(a) The Contractor shall display prominently in common work areas within business segments performing work under Department of Defense (DoD) contracts, DoD Hotline Posters prepared by the DoD Office of the Inspector General.

(b) DoD Hotline Posters may be obtained from the DoD Inspector General, ATTN: Defense Hotline, 400 Army Navy Drive, Washington, DC 22202-2884.

(c) The Contractor need not comply with paragraph (a) of this clause if it has established a mechanism, such as a hotline, by which employees may report suspected instances of improper conduct, and instructions that encourage employees to make such reports.

(End of clause)

252.204-7000 DISCLOSURE OF INFORMATION (DEC 1991)

(a) The Contractor shall not release to anyone outside the Contractor's organization any unclassified information, regardless of medium (e.g., film, tape, document), pertaining to any part of this contract or any program related to this contract, unless--

(1) The Contracting Officer has given prior written approval; or

(2) The information is otherwise in the public domain before the date of release.

(b) Requests for approval shall identify the specific information to be released, the medium to be used, and the purpose for the release. The Contractor shall submit its request to the Contracting Officer at least 45 days before the proposed date for release.

(c) The Contractor agrees to include a similar requirement in each subcontract under this contract. Subcontractors shall submit requests for authorization to release through the prime contractor to the Contracting Officer.

(End of clause)

252.204-7003 CONTROL OF GOVERNMENT PERSONNEL WORK PRODUCT (APR 1992)

The Contractor's procedures for protecting against unauthorized disclosure of information shall not require Department of Defense employees or members of the Armed Forces to relinquish control of their work products, whether classified or not, to the contractor.

(End of clause)

252.204-7004 REQUIRED CENTRAL CONTRACTOR REGISTRATION.(NOV 2001)

(a) Definitions.

As used in this clause--

(1) Central Contractor Registration (CCR) database means the primary DoD repository for contractor information required for the conduct of business with DoD.

(2) Data Universal Numbering System (DUNS) number means the 9-digit number assigned by Dun and Bradstreet Information Services to identify unique business entities.

(3) Data Universal Numbering System +4 (DUNS+4) number means the DUNS number assigned by Dun and Bradstreet plus a 4-digit suffix that may be assigned by a parent (controlling) business concern. This 4-digit suffix may be assigned at the discretion of the parent

business concern for such purposes as identifying subunits or affiliates of the parent business concern.

(4) Registered in the CCR database means that all mandatory information, including the DUNS number or the DUNS+4 number, if applicable, and the corresponding Commercial and Government Entity (CAGE) code, is in the CCR database; the DUNS number and the CAGE code have been validated; and all edits have been successfully completed.

(b)(1) By submission of an offer, the offeror acknowledges the requirement that a prospective awardee must be registered in the CCR database prior to award, during performance, and through final payment of any contract resulting from this solicitation, except for awards to foreign vendors for work to be performed outside the United States.

(2) The offeror shall provide its DUNS or, if applicable, its DUNS+4 number with its offer, which will be used by the Contracting Officer to verify that the offeror is registered in the CCR database.

(3) Lack of registration in the CCR database will make an offeror ineligible for award.

(4) DoD has established a goal of registering an applicant in the CCR database within 48 hours after receipt of a complete and accurate application via the Internet. However, registration of an applicant submitting an application through a method other than the Internet may take up to 30 days. Therefore, offerors that are not registered should consider applying for registration immediately upon receipt of this solicitation.

(c) The Contractor is responsible for the accuracy and completeness of the data within the CCR, and for any liability resulting from the Government's reliance on inaccurate or incomplete data. To remain registered in the CCR database after the initial registration, the Contractor is required to confirm on an annual basis that its information in the CCR database is accurate and complete.

(d) Offerors and contractors may obtain information on registration and annual confirmation requirements by calling 1-888-227-2423, or via the Internet at http://www.ccr.gov.

(End of clause)

252.205-7000 PROVISION OF INFORMATION TO COOPERATIVE AGREEMENT HOLDERS (DEC 1991)

(a) Definition.

"Cooperative agreement holder" means a State or local government; a private, nonprofit organization; a tribal organization (as defined in section 4(c) of the Indian Self-Determination and Education Assistance Act (Pub. L. 93-268; 25 U.S.C. 450 (c))); or an economic enterprise (as defined in section 3(e) of the Indian Financing Act of 1974 (Pub. L. 93-362; 25 U.S.C. 1452(e))) whether such economic enterprise is organized for profit or nonprofit purposes; which

has an agreement with the Defense Logistics Agency to furnish procurement technical assistance to business entities.

(b) The Contractor shall provide cooperative agreement holders, upon their request, with a list of those appropriate employees or offices responsible for entering into subcontracts under defense contracts. The list shall include the business address, telephone number, and area of responsibility of each employee or office.

(c) The Contractor need not provide the listing to a particular cooperative agreement holder more frequently than once a year.

(End of clause)

252.209-7004 SUBCONTRACTING WITH FIRMS THAT ARE OWNED OR CONTROLLED BY THE GOVERNMENT OF A TERRORIST COUNTRY (MAR 1998)

(a) Unless the Government determines that there is a compelling reason to do so, the Contractor shall not enter into any subcontract in excess of $25,000 with a firm, or subsidiary of a firm, that is identified, on the List of Parties Excluded from Federal Procurement and Nonprocurement Programs, as being ineligible for the award of Defense contracts or subcontracts because it is owned or controlled by the government of a terrorist country.

(b) A corporate officer or a designee of the Contractor shall notify the Contracting Officer, in writing, before entering into a subcontract with a party that is identified, on the List of Parties Excluded from Federal Procurement and Nonprocurement Programs, as being ineligible for the award of Defense contracts or subcontracts because it is owned or controlled by the government of a terrorist country. The notice must include the name of the proposed subcontractor notwithstanding its inclusion on the List of Parties Excluded From Federal Procurement and Nonprocurement Programs.

(End of clause)

252.215-7000 PRICING ADJUSTMENTS (DEC 1991)

The term "pricing adjustment," as used in paragraph (a) of the clauses entitled "Price Reduction for Defective Cost or Pricing Data - Modifications," "Subcontractor Cost or Pricing Data," and "Subcontractor Cost or Pricing Data - Modifications," means the aggregate increases and/or decreases in cost plus applicable profits.

(End of clause)

252.219-7003 SMALL, SMALL DISADVANTAGED AND WOMEN-OWNED SMALL BUSINESS SUBCONTRACTING PLAN (DOD CONTRACTS) (APR. 1996)

This clause supplements the Federal Acquisition Regulation 52.219-9, Small, Small Disadvantaged and Women-Owned Small Business Subcontracting Plan, clause of this contract.

(a) *Definitions. Historically black colleges and universities,* as used in this clause, means institutions determined by the Secretary of Education to meet the requirements of 34 CFR 608.2. The term also means any nonprofit research institution that was an integral part of such a college or university before November 14, 1986.

Minority institutions, as used in this clause, means institutions meeting the requirements of section 1046(3) of the Higher Education Act of 1965 (20 U.S.C. 1135d-5(3)). The term also includes Hispanic-serving institutions as defined in section 316(b)(1) of such Act (20 U.S.C. 1059c(b)(1)).

(b) Except for company or division-wide commercial items subcontracting plans, the term *small disadvantaged business,* when used in the FAR 52.219-9 clause, includes historically black colleges and universities and minority institutions, in addition to small disadvantaged business concerns.

(c) Work under the contract or its subcontracts shall be credited toward meeting the small disadvantaged business concern goal required by paragraph (d) of the FAR 52.219-9 clause when:

(1) It is performed on Indian lands or in joint venture with an Indian tribe or a tribally-owned corporation, and

(2) It meets the requirements of 10 U.S.C. 2323a.

(d) Subcontracts awarded to workshops approved by the Committee for Purchase from People Who are Blind or Severely Disabled (41 U.S.C. 46-48), may be counted toward the Contractor's small business subcontracting goal.

(e) A mentor firm, under the Pilot Mentor-Protege Program established under Section 831 of Pub. L. 101-510, as amended, may count toward its small disadvantaged business goal, subcontracts awarded--

(f) The master plan approval referred to in paragraph (f) of the FAR 52.219-9 clause is approval by the Contractor's cognizant contract administration activity.

(g) In those subcontracting plans which specifically identify small, small disadvantaged, and women-owned small businesses, the Contractor shall notify the Administrative Contracting Officer of any substitutions of firms that are not small, small disadvantaged, or women-owned small businesses for the firms listed in the subcontracting plan. Notifications shall be in writing and shall occur within a reasonable period of time after award of the subcontract. Contractor-specified formats shall be acceptable.

(End of clause)

252.223-7004 DRUG-FREE WORK FORCE (SEP 1988)

(a) Definitions.

(1) "Employee in a sensitive position," as used in this clause, means an employee who has been granted access to classified information; or employees in other positions that the Contractor determines involve national security; health or safety, or functions other than the foregoing requiring a high degree of trust and confidence.

(2) "Illegal drugs," as used in this clause, means controlled substances included in Schedules I and II, as defined by section 802(6) of title 21 of the United States Code, the possession of which is unlawful under chapter 13 of that Title. The term "illegal drugs" does not mean the use of a controlled substance pursuant to a valid prescription or other uses authorized by law.

(b) The Contractor agrees to institute and maintain a program for achieving the objective of a drug-free work force. While this clause defines criteria for such a program, contractors are encouraged to implement alternative approaches comparable to the criteria in paragraph (c) that are designed to achieve the objectives of this clause.

(c) Contractor programs shall include the following, or appropriate alternatives:

(1) Employee assistance programs emphasizing high level direction, education, counseling, rehabilitation, and coordination with available community resources;

(2) Supervisory training to assist in identifying and addressing illegal drug use by Contractor employees;

(3) Provision for self-referrals as well as supervisory referrals to treatment with maximum respect for individual confidentiality consistent with safety and security issues;

(4) Provision for identifying illegal drug users, including testing on a controlled and carefully monitored basis. Employee drug testing programs shall be established taking account of the following:

(i) The Contractor shall establish a program that provides for testing for the use of illegal drugs by employees in sensitive positions. The extent of and criteria for such testing shall be determined by the Contractor based on considerations that include the nature of the work being performed under the contract, the employee's duties, and efficient use of Contractor resources, and the risks to health, safety, or national security that could result from the failure of an employee adequately to discharge his or her position.

(ii) In addition, the Contractor may establish a program for employee drug testing--

(A) When there is a reasonable suspicion that an employee uses illegal drugs; or

(B) When an employees has been involved in an accident or unsafe practice;

(C) As part of or as a follow-up to counseling or rehabilitation for illegal drug use;

(D) As part of a voluntary employee drug testing program.

(iii) The Contractor may establish a program to test applicants for employment for illegal drug use.

(iv) For the purpose of administering this clause, testing for illegal drugs may be limited to those substances for which testing is prescribed by section 2..1 of subpart B of the "Mandatory Guidelines for Federal Workplace Drug Testing Programs" (53 FR 11980 (April 11, 1988), issued by the Department of Health and Human Services.

(d) Contractors shall adopt appropriate personnel procedures to deal with employees who are found to be using drugs illegally. Contractors shall not allow any employee to remain on duty or perform in a sensitive position who is found to use illegal drugs until such times as the Contractor, in accordance with procedures established by the Contractor, determines that the employee may perform in such a position.

(e) The provisions of this clause pertaining to drug testing program shall not apply to the extent that are inconsistent with state or local law, or with an existing collective bargaining agreement; provided that with respect to the latter, the Contractor agrees those issues that are in conflict will be a subject of negotiation at the next collective bargaining session.

(End of clause)

252.225-7001 BUY AMERICAN ACT AND BALANCE OF PAYMENTS PROGRAM (MAR 1998)

(a) Definitions.

As used in this clause--

(1) Components means those articles, materials, and supplies directly incorporated into end products.

(2) Domestic end product means--

(i) An unmanufactured end product that has been mined or produced in the United States; or

(ii) An end product manufactured in the United States if the cost of its qualifying country components and its components that are mined, produced, or manufactured in the United States exceeds 50 percent of the cost of all its components. The cost of components shall include transportation costs to the place of incorporation into the end product and U.S. duty (whether or not a duty-free entry certificate may be issued). A component shall be considered to have been mined, produced, or manufactured in the United States (regardless of its source in fact) if the end product in which it is incorporated is manufactured in the United States and the component is of a class or kind--

(A) Determined to be not mined, produced, or manufactured in the United States in sufficient and reasonably available commercial quantities and of a satisfactory quality; or

(B) That the Secretary concerned determines would be inconsistent with the public interest to apply the restrictions of the Buy American Act.

(3) End product means those articles, materials, and supplies to be acquired for public use under the contract. For this contract, the end products are the line items to be delivered to the Government (including supplies to be acquired by the Government for public use in connection with service contracts, but excluding installation and other services to be performed after delivery).

(4) Nonqualifying country end product means an end product that is neither a domestic end product nor a qualifying country end product.

(5) Qualifying country means any country set forth in subsection 225.872-1 of the Defense Federal Acquisition Regulation Supplement.

(6) Qualifying country component means an item mined, produced, or manufactured in a qualifying country.

(7) Qualifying country end product means--

(i) An unmanufactured end product mined or produced in a qualifying country; or

(ii) An end product manufactured in a qualifying country if the cost of the components mined, produced, or manufactured in the qualifying country and its components mined, produced, or manufactured in the United States exceeds 50 percent of the cost of all its components.

(b) This clause implements the Buy American Act (41 U.S.C. Section 10a-d) in a manner that will encourage a favorable international balance of payments by providing a preference to domestic end products over other end products, except for end products which are qualifying country end products.

(c) The Contractor agrees that it will deliver only domestic end products unless, in its offer, it specified delivery of other end products in the Buy American Act--Balance of Payments Program Certificate provision of the solicitation. An offer certifying that a qualifying country end product will be supplied requires the Contractor to deliver a qualifying country end product or a domestic end product.

(d) The offered price of qualifying country end products should not include custom fees or duty. The offered price of nonqualifying country end products, and products manufactured in the United States that contain nonqualifying country components, must include all applicable duty. The award price will not include duty for end products or components that are to be accorded duty-free entry. Generally, when the Buy American Act is applicable, each nonqualifying

country offer is adjusted for the purpose of evaluation by adding 50 percent of the offer, inclusive of duty.

252.225-7002 QUALIFYING COUNTRY SOURCES AS SUBCONTRACTORS (DEC 1991)

Subject to the restrictions in section 225.872 of the Defense FAR Supplement, the Contractor shall not preclude qualifying country sources and U.S. sources from competing for subcontracts under this contract.

(End of clause)

252.225-7009 DUTY-FREE ENTRY--QUALIFYING COUNTRY END PRODUCTS AND SUPPLIES (AUG 2000)

(a) Definitions. Qualifying country and qualifying country end products have the meaning given in the Buy American Act and Balance of Payments Program clause, Buy American Act--Trade Agreements--Balance of Payments Program clause, Buy American Act--North American Free Trade Agreement Implementation Act--Balance of Payments Program clause, or Trade Agreements clause of this contract.

(b) The requirements of this clause apply to this contract and subcontracts, including purchase orders, that involve supplies to be accorded duty-free entry whether placed--

(1) Directly with a foreign concern as a prime contract; or

(2) As a subcontract or purchase order under a contract with a domestic concern.

(c) Except as otherwise approved by the Contracting Officer, or unless supplies were imported into the United States before the date of this contract or, in the case of supplies imported by a first or lower tier subcontractor, before the date of the subcontract, no amount is or will be included in the contract price for duty for--

(1) End items that are qualifying country end products; or

(2) Components (including, without limitation, raw materials and intermediate assemblies) produced or made in qualifying countries, that are to be incorporated in the end items to be delivered under this contract, provided that the end items are manufactured in the United States or in a qualifying country.

(d)The Contractor warrants that--

(1)All qualifying country supplies, for which duty-free entry is to be claimed, are intended to be delivered to the Government or incorporated in the end items to be delivered under this contract; and

(2)The Contractor will pay duty to the extent that such supplies, or any portion thereof (if not scrap or salvage) are diverted to nongovernmental use, other than as a result of a competitive sale made, directed, or authorized by the Contracting Officer.

(e)The Government agrees to execute duty-free entry certificates and to afford such assistance as appropriate to obtain the duty-free entry of qualifying country supplies for which the shipping documents bear the notation specified in paragraph (f) of this clause, except as the Contractor may otherwise agree.

(f)All shipping documents submitted to Customs, covering foreign end products or supplies for which duty-free entry certificates are to be issued under this clause, shall--

(1)Consign the shipments to the appropriate--

(i)Military department in care of the Contractor, including the Contractor's delivery address; or

(ii)Military installation; and

(2)Include the following information--

(i)Prime contract number, and delivery order if applicable;

(ii)Number of the subcontract/purchase order for foreign supplies if applicable;

(iii)Identification of carrier;

(iv)(A) For direct shipments to a U.S. military installation, the notation:

UNITED STATES GOVERNMENT, DEPARTMENT OF DEFENSE Duty-Free Entry to be claimed pursuant to Section XXII, Chapter 98, Subchapter VIII, Item 9808.00.30 of the Harmonized Tariff Schedule of the United States. Upon arrival of shipment at the appropriate port of entry, District Director of Customs, please release shipment under 19 CFR part 142 and notify Commander, Defense Contract Management Agency (DCMA) New York, ATTN: Customs Team, DCMDN-GNIC, 207 New York Avenue, Building 120, Staten Island, New York, 10305-5013, for execution of Customs Forms 7501, 7501A, or 7506 and any required duty-free entry certificates.

(B) In cases where the shipment will be consigned to other than a military installation, e.g., a domestic contractor's plant, the shipping document notation shall be altered to insert the name and address of the contractor, agent or broker who will notify Commander, DCM New York, for execution of the duty-free certificate

(v)Gross weight in pounds (if freight is based on space tonnage, state cubic feet in addition to gross shipping weight);

(vi)Estimated value in U.S. dollars; and

(vii) Activity Address Number of the contract administration office actually administering the prime contract, e.g., for DCM Dayton, S3605A

(g) Preparation of customs forms. (1) Except for shipments consigned to a military installation, the Contractor shall prepare, or authorize an agent to prepare, any customs forms required for the entry of foreign supplies in connection with DoD contracts into the United States, its possessions, or Puerto Rico. The completed customs forms shall be submitted to the District Director of Customs with a copy to DCM New York for execution of any required duty-free entry certificates. Shipments consigned directly to a military installation will be released in accordance with 10.101 and 10.102 of the U.S. Customs regulations.

(2) For shipments containing both supplies that are to be accorded duty-free entry and supplies that are not, the Contractor shall identify on the customs forms those items that are eligible for duty-free entry

(h)The contractor agrees--

(1)To prepare (if this contract is placed directly with a foreign supplier), or to instruct the foreign supplier to prepare, a sufficient number of copies of the bill of lading (or other shipping document) so that at least two of the copies accompanying the shipment will be available for use by the District Director of Customs at the port of entry;

(2)To consign the shipment as specified in paragraph (f) of this clause; and

(3)To mark the exterior of all packages as follows:

(i)"UNITED STATES GOVERNMENT, DEPARTMENT OF DEFENSE;" and

(ii)The activity address number of the contract administration office actually administering the prime contract.

(i)The Contractor agrees to notify the Contracting Officer administering the prime contract in writing of any purchase under the contract of qualifying country supplies to be accorded duty-free entry that are to be imported into the United States for delivery to the Government or for incorporation in end items to be delivered to the Government. The notice shall be furnished to the contract administration office immediately upon award to the qualifying country supplier. The notice shall contain--

(1)Prime contractor's name, address, and CAGE code;

(2)Prime contract number, and delivery order number if applicable;

(3)Total dollar value of the prime contract or delivery order;

(4)Expiration date of the prime contract or delivery order;

(5)Foreign supplier's name and address;

(6)Number of the subcontract/purchase order for foreign supplies;

(7)Total dollar value of the subcontract for foreign supplies;

(8)Expiration date of the subcontract for foreign supplies;

(9)List of items purchased;

(10)An agreement by the Contractor that duty shall be paid by the Contractor to the extent that such supplies, or any portion (if not scrap or salvage) are diverted to nongovernmental use other than as a result of a competitive sale made, directed or authorized by the Contracting Officer;

(11)The qualifying country; and

(12)The scheduled delivery date(s).

(j)This clause does not apply to purchases of qualifying country supplies in connection with this contract if--

(1)The qualifying country supplies are identical in nature to supplies purchased by the Contractor or any subcontractor in connection with its commercial business; and

(2)It is not economical or feasible to account for such supplies so as to ensure that the amount of the supplies for which duty-free entry is claimed does not exceed the amount purchased in connection with this contract.

(k)The Contractor agrees to insert the substance of this clause, including this paragraph (k) in all subcontracts for supplies. Each subcontract shall require the subcontractor to identify this contract by including its contract number on any shipping documents submitted to Customs covering supplies for which duty-free entry is to be claimed pursuant to this clause. The Contractor also agrees that the name and address of the Contracting Officer administering the prime contract (name and address of the contract administration office cognizant of the prime contract), and its activity address number (Appendix G of the Defense FAR Supplement), and the information required by paragraphs (i)(1), (2), and (3) of this clause will be included in applicable subcontracts.

(End of clause)

252.225-7012 PREFERENCE FOR CERTAIN DOMESTIC COMMODITIES (APR 2002)

(a) Definitions. As used in this clause--

(1) Component means any item supplied to the Government as part of an end product or of another component.

(2) End product means supplies delivered under a line item of this contract.
(b) The Contractor shall deliver under this contract only such of the following items, either as end products or components, that have been grown, reprocessed, reused, or produced in the United States, its possessions, or Puerto Rico:

(1) Food.

(2) Clothing.

(3) Tents, tarpaulins, or covers.

(4) Cotton and other natural fiber products.

(5) Woven silk or woven silk blends.

(6) Spun silk yarn for cartridge cloth.

(7) Synthetic fabric, and coated synthetic fabric, including all textile fibers and yarns that are for use in such fabrics.

(8) Canvas products.

(9) Wool (whether in the form of fiber or yarn or contained in fabrics, materials, or manufactured articles).

(10) Any item of individual equipment (Federal Supply Class 8465) manufactured from or containing fibers, yarns, fabrics, or materials listed in this paragraph (b).

(c) This clause does not apply--

(1) To items listed in section 25.104(a) of the Federal Acquisition Regulation (FAR), or other items for which the Government has determined that a satisfactory quality and sufficient quantity cannot be acquired as and when needed at U.S. market prices;

(2) To end products incidentally incorporating cotton, other natural fibers, or wool, for which the estimated value of the cotton, other natural fibers, or wool--

(i) Is not more than 10 percent of the total price of the end product; and (ii) Does not exceed the simplified acquisition threshold in FAR part 2;

(3) To foods that have been manufactured or processed in the United States, its possessions, or Puerto Rico, regardless of where the foods (and any component if applicable) were grown or produced;

(4) To chemical warfare protective clothing produced in the countries listed in subsection 225.872-1 of the Defense FAR Supplement; or

(5) To fibers and yarns that are for use in synthetic fabric or coated synthetic fabric (but does apply to the synthetic or coated synthetic fabric itself), if--

(i) The fabric is to be used as a component of an end product that is not a textile product. Examples of textile products, made in whole or in part of fabric, include--

(A) Draperies, floor coverings, furnishings, and bedding (Federal Supply Group 72, Household and Commercial Furnishings and Appliances);

(B) Items made in whole or in part of fabric in Federal Supply Group 83, Textile/leather/furs/apparel/findings/ tents/flags, or Federal Supply Group 84, Clothing, Individual Equipment and Insignia;

(C) Upholstered seats (whether for household, office, or other use); and

(D) Parachutes (Federal Supply Class 1670); or

(ii) The fibers and yarns are para-aramid fibers and yarns manufactured in the Netherlands.

(End of clause)

252.225-7031 SECONDARY ARAB BOYCOTT OF ISRAEL (JUN 1992)

(a) Definitions. As used in this clause--

(1) "Foreign person" means any person other than a United States person as defined in Section 16(2) of the Export Administration Act of 1979 (50 U.S.C. App. Sec 2415).

(2) "United States person" is defined in Section 16(2) of the Export Administration Act of 1979 and means any United States resident or national (other than an individual resident outside the United States and employed by other than a United States person), any domestic concern (including any permanent domestic establishment of any foreign concern), and any foreign subsidiary or affiliate (including any permanent foreign establishment) of any domestic concern which is controlled in fact by such domestic concerns, as determined under regulations of the President.

(b) Certification. By submitting this offer, the Offeror, if a foreign person, company or entity, certifies that it--

(1) Does not comply with the Secondary Arab Boycott of Israel; and

(2) Is not taking or knowingly agreeing to take any action, with respect to the Secondary Boycott of Israel by Arab countries, which 50 U.S.C. App. Sec 2407(a) prohibits a United States person from taking.

(End of clause)

252.226-7001 Utilization of Indian Organizations and Indian-Owned Economic Enterprises-DoD Contracts (Sep 2001)

(a) Definitions. As used in this clause--

"Indian" means any person who is a member of any Indian tribe, band, group, pueblo, or community that is recognized by the Federal Government as eligible for services from the Bureau of Indian Affairs (BIA) in accordance with 25 U.S.C. 1452(c) and any "Native" as defined in the Alaska Native Claims Settlement Act (43 U.S.C. 1601).

"Indian organization" means the governing body of any Indian tribe or entity established or recognized by the governing body of an Indian tribe for the purposes of 25 U.S.C. Chapter 17.

"Indian-owned economic enterprise" means any Indian-owned (as determined by the Secretary of the Interior) commercial, industrial, or business activity established or organized for the purpose of profit, provided that Indian ownership constitutes not less than 51 percent of the enterprise.

"Indian tribe" means any Indian tribe, band, group, pueblo, or community, including native villages and native groups (including corporations organized by Kenai, Juneau, Sitka, and Kodiak) as defined in the Alaska Native Claims Settlement Act, that is recognized by the Federal Government as eligible for services from BIA in accordance with 25 U.S.C. 1452 (c).

"Interested party" means a contractor or an actual or prospective offeror whose direct economic interest would be affected by the award of a subcontract or by the failure to award a subcontract.

(b) The Contract shall use its best efforts to give Indian organizations and Indian-owned economic enterprises the maximum practicable opportunity to participate in the subcontracts it awards, to the fullest extent consistent with efficient performance of the contract.

(c) The Contracting Officer and the Contractor, acting in good faith, may rely on the representation of an Indian organization or Indian-owned economic enterprise as to its eligibility, unless and interested party challenges its status or the Contracting Officer has independent reason to question that status.

(d) In the event of a challenge to the representation of a subcontractor, the Contracting Officer will refer the matter to the U.S. Department of the Interior, Bureau of Indian Affairs, Attn: Chief, Division of Contracting and Grants Administration, 1849 C Street NW, MS-2626-MIB, Washington, DC 20240-4000. The BIA will determine the eligibility and will notify the Contracting Officer. No incentive payment will be made--

(1) Within 59 working days of subcontract award;

(2) While a challenge is pending; or

(3) If a subcontractor is determined to be an ineligible participant.

(e)(1) The Contractor, on its own behalf or on behalf of a subcontractor at any tier, may request an adjustment under the Indian Incentive Program to the following:

(i) The estimated cost of cost-type contract.

(ii) The target cost of a cost-plus-incentive-fee contract.

(iii) The target cost and ceiling price of a fixed-price incentive contract.

(iv) The price of a firm-fixed-price contract.

(2) The amount of the adjustment that may be made to the contract is 5 percent of the estimated cost, target cost, or firm-fixed price included in the subcontract initially awarded to the Indian organization or Indian-owned economic enterprise.

(3) The Contractor has the burden of proving the amount claimed and must assert its request for an adjustment prior to completion of contract performance.

(4) The Contracting Officer, subject to the terms and conditions of the contract and the availability of funds, will authorize an incentive payment of 5 percent of the amount paid to the subcontractor.

(5) If the Contractor requests and receives an adjustment on behalf of a subcontractor, the Contractor is obligated to pay the subcontractor the adjustment.

(f) The Contractor shall insert the substance of this clause, including this paragraph (f), in all subcontracts that--

(1) Are for other than commercial items; and

(2) Are expected to exceed the simplified acquisition threshold in Part 2 of the Federal Acquisition Regulation.

(End of clause)

252.227-7013 RIGHTS IN TECHNICAL DATA--NONCOMMERCIAL ITEMS. (NOV 1995)

(a) Definitions. As used in this clause:

(1) Computer data base means a collection of data recorded in a form capable of being processed by a computer. The term does not include computer software.

(2) Computer program means a set of instructions, rules, or routines recorded in a form that is capable of causing a computer to perform a specific operation or series of operations.

(3) Computer software means computer programs, source code, source code listings, object code listings, design details, algorithms, processes, flow charts, formulae and related material that would enable the software to be reproduced, recreated, or recompiled. Computer software does not include computer data bases or computer software documentation.

(4) Computer software documentation means owner's manuals, user's manuals, installation instructions, operating instructions, and other similar items, regardless of storage medium, that explain the capabilities of the computer software or provide instructions for using the software.

(5) Detailed manufacturing or process data means technical data that describe the steps, sequences, and conditions of manufacturing, processing or assembly used by the manufacturer to produce an item or component or to perform a process.

(6) Developed means that an item, component, or process exists and is workable. Thus, the item or component must have been constructed or the process practiced. Workability is generally established when the item, component, or process has been analyzed or tested sufficiently to demonstrate to reasonable people skilled in the applicable art that there is a high probability that it will operate as intended. Whether, how much, and what type of analysis or testing is required to establish workability depends on the nature of the item, component, or process, and the state of the art. To be considered "developed," the item, component, or process need not be at the stage where it could be offered for sale or sold on the commercial market, nor must the item, component, or process be actually reduced to practice within the meaning of Title 35 of the United States Code.

(7) Developed exclusively at private expense means development was accomplished entirely with costs charged to indirect cost pools, costs not allocated to a government contract, or any combination thereof.

(i) Private expense determinations should be made at the lowest practicable level.

(ii) Under fixed-price contracts, when total costs are greater than the firm-fixed-price or ceiling price of the contract, the additional development costs necessary to complete development shall not be considered when determining whether development was at government, private, or mixed expense.

(8) Developed exclusively with government funds means development was not accomplished exclusively or partially at private expense.

(9) Developed with mixed funding means development was accomplished partially with costs charged to indirect cost pools and/or costs not allocated to a government contract, and partially with costs charged directly to a government contract.

(10) Form, fit, and function data means technical data that describes the required overall physical, functional, and performance characteristics (along with the qualification requirements, if applicable) of an item, component, or process to the extent necessary to permit identification of physically and functionally interchangeable items.

(11) Government purpose means any activity in which the United States Government is a party, including cooperative agreements with international or multi-national defense organizations, or sales or transfers by the United States Government to foreign governments or international organizations. Government purposes include competitive procurement, but do not include the rights to use, modify, reproduce, release, perform, display, or disclose technical data for commercial purposes or authorize others to do so.

(12) Government purpose rights means the rights to--

(i) Use, modify, reproduce, release, perform, display, or disclose technical data within the Government without restriction; and

(ii) Release or disclose technical data outside the Government and authorize persons to whom release or disclosure has been made to use, modify, reproduce, release, perform, display, or disclose that data for United States government purposes.

(13) Limited rights means the rights to use, modify, reproduce, release, perform, display, or disclose technical data, in whole or in part, within the Government. The Government may not, without the written permission of the party asserting limited rights, release or disclose the technical data outside the Government, use the technical data for manufacture, or authorize the technical data to be used by another party, except that the Government may reproduce, release or disclose such data or authorize the use or reproduction of the data by persons outside the Government if reproduction, release, disclosure, or use is--

(i) Necessary for emergency repair and overhaul; or

(ii) A release or disclosure of technical data (other than detailed manufacturing or process data) to, or use of such data by, a foreign government that is in the interest of the Government and is required for evaluational or informational purposes;

(iii) Subject to a prohibition on the further reproduction, release, disclosure, or use of the technical data; and

(iv) The contractor or subcontractor asserting the restriction is notified of such reproduction, release, disclosure, or use.

(14) Technical data means recorded information, regardless of the form or method of the recording, of a scientific or technical nature (including computer software documentation). The term does not include computer software or data incidental to contract administration, such as financial and/or management information.

(15) Unlimited rights means rights to use, modify, reproduce, perform, display, release, or disclose technical data in whole or in part, in any manner, and for any purpose whatsoever, and to have or authorize others to do so.

(b) Rights in technical data. The Contractor grants or shall obtain for the Government the following royalty free, world-wide, nonexclusive, irrevocable license rights in technical data other than computer software documentation (see the Rights in Noncommercial Computer Software and Noncommercial Computer Software Documentation clause of this contract for rights in computer software documentation):

(1) Unlimited rights.

The Government shall have unlimited rights in technical data that are--

(i) Data pertaining to an item, component, or process which has been or will be developed exclusively with Government funds;

(ii) Studies, analyses, test data, or similar data produced for this contract, when the study, analysis, test, or similar work was specified as an element of performance;

(iii) Created exclusively with Government funds in the performance of a contract that does not require the development, manufacture, construction, or production of items, components, or processes;

(iv) Form, fit, and function data;

(v) Necessary for installation, operation, maintenance, or training purposes (other than detailed manufacturing or process data);

(vi) Corrections or changes to technical data furnished to the Contractor by the Government;

(vii) Otherwise publicly available or have been released or disclosed by the Contractor or subcontractor without restrictions on further use, release or disclosure, other than a release or disclosure resulting from the sale, transfer, or other assignment of interest in the technical data to another party or the sale or transfer of some or all of a business entity or its assets to another party;

(viii) Data in which the Government has obtained unlimited rights under another Government contract or as a result of negotiations; or

(ix) Data furnished to the Government, under this or any other Government contract or subcontract thereunder, with--

(A) Government purpose license rights or limited rights and the restrictive condition(s) has/have expired; or

(B) Government purpose rights and the Contractor's exclusive right to use such data for commercial purposes has expired.

(2) Government purpose rights.

(i) The Government shall have government purpose rights for a five-year period, or such other period as may be negotiated, in technical data--

(A) That pertain to items, components, or processes developed with mixed funding except when the Government is entitled to unlimited rights in such data as provided in paragraphs (b)(ii) and (b)(iv) through (b)(ix) of this clause; or

(B) Created with mixed funding in the performance of a contract that does not require the development, manufacture, construction, or production of items, components, or processes.

(ii) The five-year period, or such other period as may have been negotiated, shall commence upon execution of the contract, subcontract, letter contract (or similar contractual instrument), contract modification, or option exercise that required development of the items, components, or processes or creation of the data described in paragraph (b)(2)(i)(B) of this clause. Upon expiration of the five-year or other negotiated period, the Government shall have unlimited rights in the technical data.

(iii) The Government shall not release or disclose technical data in which it has government purpose rights unless-

(A) Prior to release or disclosure, the intended recipient is subject to the non-disclosure agreement at 227.7103-7 of the Defense Federal Acquisition Regulation Supplement (DFARS); or

(B) The recipient is a Government contractor receiving access to the data for performance of a Government contract that contains the clause at DFARS 252.227-7025, Limitations on the Use or Disclosure of Government-Furnished Information Marked with Restrictive Legends.

(iv) The Contractor has the exclusive right, including the right to license others, to use technical data in which the Government has obtained government purpose rights under this contract for any commercial purpose during the time period specified in the government purpose rights legend prescribed in paragraph (f)(2) of this clause.

(3) Limited rights.

(i) Except as provided in paragraphs (b)(1)(ii) and (b)(1)(iv) through (b)(1)(ix) of this clause, the Government shall have limited rights in technical data--

(A) Pertaining to items, components, or processes developed exclusively at private expense and marked with the limited rights legend prescribed in paragraph (f) of this clause; or

(B) Created exclusively at private expense in the performance of a contract that does not require the development, manufacture, construction, or production of items, components, or processes.

(ii) The Government shall require a recipient of limited rights data for emergency repair or overhaul to destroy the data and all copies in its possession promptly following completion of the emergency repair/overhaul and to notify the Contractor that the data have been destroyed.

(iii) The Contractor, its subcontractors, and suppliers are not required to provide the Government additional rights to use, modify, reproduce, release, perform, display, or disclose technical data furnished to the Government with limited rights. However, if the Government desires to obtain additional rights in technical data in which it has limited rights, the Contractor agrees to promptly enter into negotiations with the Contracting Officer to determine whether there are acceptable terms for transferring such rights. All technical data in which the Contractor has granted the Government additional rights shall be listed or described in a license agreement made part of the contract. The license shall enumerate the additional rights granted the Government in such data.

(4) Specifically negotiated license rights.

The standard license rights granted to the Government under paragraphs (b)(1) through (b)(3) of this clause, including the period during which the Government shall have government purpose rights in technical data, may be modified by mutual agreement to provide such rights as the parties consider appropriate but shall not provide the Government lesser rights than are enumerated in paragraph (a)(13) of this clause. Any rights so negotiated shall be identified in a license agreement made part of this contract.

(5) Prior government rights.

Technical data that will be delivered, furnished, or otherwise provided to the Government under this contract, in which the Government has previously obtained rights shall be delivered, furnished, or provided with the pre-existing rights, unless--

(i) The parties have agreed otherwise; or

(ii) Any restrictions on the Government's rights to use, modify, reproduce, release, perform, display, or disclose the data have expired or no longer apply.

(6) Release from liability.

The Contractor agrees to release the Government from liability for any release or disclosure of technical data made in accordance with paragraph (a)(13) or (b)(2)(iii) of this clause, in accordance with the terms of a license negotiated under paragraph (b)(4) of this clause, or by others to whom the recipient has released or disclosed the data and to seek relief solely from the party who has improperly used, modified, reproduced, released, performed, displayed, or disclosed Contractor data marked with restrictive legends.

(c) Contractor rights in technical data. All rights not granted to the Government are retained by the Contractor.

(d) Third party copyrighted data. The Contractor shall not, without the written approval of the Contracting Officer, incorporate any copyrighted data in the technical data to be delivered under this contract unless the Contractor is the copyright owner or has obtained for the Government the license rights necessary to perfect a license or licenses in the deliverable data of the appropriate scope set forth in paragraph (b) of this clause, and has affixed a statement of the license or licenses obtained on behalf of the Government and other persons to the data transmittal document.

(e) Identification and delivery of data to be furnished with restrictions on use, release, or disclosure. (1) This paragraph does not apply to restrictions based solely on copyright.

(2) Except as provided in paragraph (e)(3) of this clause, technical data that the Contractor asserts should be furnished to the Government with restrictions on use, release, or disclosure are identified in an attachment to this contract (the Attachment). The Contractor shall not deliver any data with restrictive markings unless the data are listed on the Attachment.

(3) In addition to the assertions made in the Attachment, other assertions may be identified after award when based on new information or inadvertent omissions unless the inadvertent omissions would have materially affected the source selection decision. Such identification and assertion shall be submitted to the Contracting Officer as soon as practicable prior to the scheduled date for delivery of the data, in the following format, and signed by an official authorized to contractually obligate the Contractor: Identification and Assertion of Restrictions on the Government's Use, Release, or Disclosure of Technical Data.

The Contractor asserts for itself, or the persons identified below, that the Government's rights to use, release, or disclose the following technical data should be restricted--

Technical data to be Furnished With Restrictions \1/	Asserted Basis for Assertion \2/	Rights Category \3/	Name of Person Asserting Restrictions \4/
(LIST)	(LIST)	(LIST)	(LIST)

\1/ If the assertion is applicable to items, components or processes developed at private expense, identify both the data and each such items, component, or process.

\2/ Generally, the development of an item, component, or process at private expense, either exclusively or partially, is the only basis for asserting restrictions on the Government's rights to use, release, or disclose technical data pertaining to such items, components, or processes. Indicate whether development was exclusively or partially at private expense. If development was not at private expense, enter the specific reason for asserting that the Government's rights should be restricted.

\3/ Enter asserted rights category (e.g., government purpose license rights from a prior contract, rights in SBIR data generated under another contract, limited or government purpose rights under this or a prior contract, or specifically negotiated licenses).

\4/ Corporation, individual, or other person, as appropriate.
Date _____

Printed Name and Title _____

_____

Signature _____

(End of identification and assertion)

(4) When requested by the Contracting Officer, the Contractor shall provide sufficient information to enable the Contracting Officer to evaluate the Contractor's assertions. The Contracting Officer reserves the right to add the Contractor's assertions to the Attachment and validate any listed assertion, at a later date, in accordance with the procedures of the Validation of Restrictive Markings on Technical Data clause of this contract.

(f) Marking requirements. The Contractor, and its subcontractors or suppliers, may only assert restrictions on the Government's rights to use, modify, reproduce, release, perform, display, or disclose technical data to be delivered under this contract by marking the deliverable data subject to restriction. Except as provided in paragraph (f)(5) of this clause, only the following legends are authorized under this contract: the government purpose rights legend at paragraph (f)(2) of this clause; the limited rights legend at paragraph (f)(3) of this clause; or the special license rights legend at paragraph (f)(4) of this clause; and/or a notice of copyright as prescribed under 17 U.S.C. 401 or 402.

(1) General marking instructions. The Contractor, or its subcontractors or suppliers, shall conspicuously and legibly mark the appropriate legend on all technical data that qualify for such markings. The authorized legends shall be placed on the transmittal document or storage container and, for printed material, each page of the printed material containing technical data for which restrictions are asserted. When only portions of a page of printed material are subject to the asserted restrictions, such portions shall be identified by circling, underscoring, with a note, or other appropriate identifier. Technical data transmitted directly from one computer or computer terminal to another shall contain a notice of asserted restrictions. Reproductions of

technical data or any portions thereof subject to asserted restrictions shall also reproduce the asserted restrictions.

(2) Government purpose rights markings. Data delivered or otherwise furnished to the Government purpose rights shall be marked as follows:

Government Purpose Rights

Contract No. _____

Contractor Name _____

Contractor Address _____

_____

Expiration Date _____

The Government's rights to use, modify, reproduce, release, perform, display, or disclose these technical data are restricted by paragraph (b)(2) of the Rights in Technical Data--Noncommercial Items clause contained in the above identified contract. No restrictions apply after the expiration date shown above. Any reproduction of technical data or portions thereof marked with this legend must also reproduce the markings.

(End of legend)

(3) Limited rights markings. Data delivered or otherwise furnished to the Government with limited rights shall be marked with the following legend:

Limited Rights

Contract No. _____

Contractor Name _____

Contractor Address _____

_____

The Government's rights to use, modify, reproduce, release, perform, display, or disclose these technical data are restricted by paragraph (b)(3) of the Rights in Technical Data--Noncommercial Items clause contained in the above identified contract. Any reproduction of technical data or portions thereof marked with this legend must also reproduce the markings. Any person, other than the Government, who has been provided access to such data must promptly notify the above named Contractor.

(End of legend)

(4) Special license rights markings. (i) Data in which the Government's rights stem from a specifically negotiated license shall be marked with the following legend:

Special License Rights

The Government's rights to use, modify, reproduce, release, perform, display, or disclose these data are restricted by Contract No. _____ (Insert contract number) _____, License No. _____ (Insert license identifier) _____. Any reproduction of technical data or portions thereof marked with this legend must also reproduce the markings.

(End of legend)

(ii) For purposes of this clause, special licenses do not include government purpose license rights acquired under a prior contract (see paragraph (b)(5) of this clause).

(5) Pre-existing data markings. If the terms of a prior contract or license permitted the Contractor to restrict the Government's rights to use, modify, reproduce, release, perform, display, or disclose technical data deliverable under this contract, and those restrictions are still applicable, the Contractor may mark such data with the appropriate restrictive legend for which the data qualified under the prior contract or license. The marking procedures in paragraph (f)(1) of this clause shall be followed.

(g) Contractor procedures and records. Throughout performance of this contract, the Contractor and its subcontractors or suppliersthat will deliver technical data with other than unlimited rights, shall--

(1) Have, maintain, and follow written procedures sufficient to assure that restrictive markings are used only when authorized by the terms of this clause; and

(2) Maintain records sufficient to justify the validity of any restrictive markings on technical data delivered under this contract.

(h) Removal of unjustified and nonconforming markings. (1) Unjustified technical data markings. The rights and obligations of the parties regarding the validation of restrictive markings on technical data furnished or to be furnished under this contract are contained in the Validation of Restrictive Markings on Technical Data clause of this contract. Notwithstanding any provision of this contract concerning inspection and acceptance, the Government may ignore or, at the Contractor's expense, correct or strike a marking if, in accordance with the procedures in the Validation of Restrictive Markings on Technical Data clause of this contract, a restrictive marking is determined to be unjustified.

(2) Nonconforming technical data markings. A nonconforming marking is a marking placed on technical data delivered or otherwise furnished to the Government under this contract that is not in the format authorized by this contract. Correction of nonconforming markings is not subject to

the validation of Restrictive Markings on Technical Data clause of this contract. If the Contracting Officer notifies the Contractor of a nonconforming marking and the Contractor fails to remove or correct such marking within sixty (60) days, the Government may ignore or, at the Contractor's expense, remove or correct any nonconforming marking.

(i) Relation to patents. Nothing contained in this clause shall imply a license to the Government under any patent or be construed as affecting the scope of any license or other right otherwise granted to the Government under any patent.

(j) Limitation on charges for rights in technical data. (1) The Contractor shall not charge to this contract any cost, including, but not limited to, license fees, royalties, or similar charges, for rights in technical data to be delivered under this contract when--

(i) The Government has acquired, by any means, the same or greater rights in the data; or

(ii) The data are available to the public without restrictions.

(2) The limitation in paragraph (j)(1) of this clause--

(i) Includes costs charged by a subcontractor or supplier, at any tier, or costs incurred by the Contractor to acquire rights in subcontractor or supplier technical data, if the subcontractor or supplier has been paid for such rights under any other Government contract or under a license conveying the rights to the Government; and

(ii) Does not include the reasonable costs of reproducing, handling, or mailing the documents or other media in which the technical data will be delivered.

(k) Applicability to subcontractors or suppliers. (1) The Contractor shall ensure that the rights afforded its subcontractors and suppliers under 10 U.S.C. 2320, 10 U.S.C. 2321, and the identification, assertion, and delivery processes of paragraph (e) of this clause are recognized and protected.

(2) Whenever any technical data for noncommercial items is to be obtained from a subcontractor or supplier for delivery to the Government under this contract, the Contractor shall use this same clause in the subcontract or other contractual instrument, and require its subcontractors or suppliers to do so, without alteration, except to identify the parties. No other clause shall be used to enlarge or diminish the Government's, the Contractor's, or a higher-tier subcontractor's or supplier's rights in a subcontractor's or supplier's technical data.

(3) Technical data required to be delivered by a subcontractor or supplier shall normally be delivered to the next higher-tier contractor, subcontractor, or supplier. However, when there is a requirement in the prime contract for data which may be submitted with other than unlimited rights by a subcontractor or supplier, then said subcontractor or supplier may fulfill its requirement by submitting such data directly to the Government, rather than through a higher-tier contractor, subcontractor, or supplier.

(4) The Contractor and higher-tier subcontractors or suppliers shall not use their power to award contracts as economic leverage to obtain rights in technical data from their subcontractors or suppliers. (5) In no event shall the Contractor use its obligation to recognize and protect subcontractor or supplier rights in technical data as an excuse for failing to satisfy its contractual obligations to the Government.

(End of clause)

252.227-7016 RIGHTS IN BID OR PROPOSAL INFORMATION (JUN 1995)

(a) Definitions.

(1) For contracts that require the delivery of technical data, the terms "technical data" and "computer software" are defined in the Rights in Technical Data--Noncommercial Item clause of this contract or, if this is a contract awarded under the Small Business Innovative Research Program, the Rights in Noncommercial Technical Data and Computer Software--Small Business Innovative Research (SBIR) Program clause of this contract.

(2) For contracts that do not require the delivery of technical data, the term "computer software" is defined in the Rights in Noncommercial Computer and Noncommercial Computer Software Documentation clause of this contract or, if this is a contract awarded under the Small Business Innovative Research Program, the Rights in Noncommercial Technical Data and Computer Software--Small Business Innovative Research (SBIR) Program clause of this contract.

(b) Government rights to contract award. By submission of its offer, the Offeror agrees that the Government--

(1) May reproduce the bid or proposal, or any portions thereof, to the extent necessary to evaluate the offer.

(2) Except as provided in paragraph (d) of this clause, shall use information contained in the bid or proposal only for evaluational purposes and shall not disclose, directly or indirectly, such information to any person including potential evaluators, unless that person has been authorized by the head of the agency, his or her designee, or the Contracting Officer to receive such information.

(c) Government rights subsequent to contract award--The Contractor agrees--

(1) Except as provided in paragraphs (c)((2), (d), and (e) of this clause, the Government shall have the rights to use, modify, reproduce, release, perform, display, or disclose information contained in the Contractor's bid or proposal within the Government. The Government shall not release, perform, display, or disclose such information outside the Government without the Contractor's written permission.

(2) The Government's right to use, modify, reproduce, release, perform, display, or disclose information that is technical data or computer software required to be delivered under this

contract are determined by the Rights in Technical Data--Noncommercial Items, Rights in Noncommercial Computer Software and Noncommercial Computer Software Documentation, or Rights in Noncommercial Technical Data and Computer Software--Small Business Innovative Research (SBIR) Program clause(s) of this contract.

(d) Government-furnished information. The Government's rights with respect to technical data or computer software contained in the Contractor's bid or proposal that were provided to the Contractor by the Government are subject only to restrictions on use, modification, reproduction, release, performance, display, or disclosure, if any, imposed by the developer or licensor of such data or software.

(e) Information available without restrictions. The Government's rights to use, modify, reproduce, release, perform, display, or, disclose information contained in a bid or proposal, including technical data or computer software, and to permit others to do so, shall not be restricted in any manner if such information has been released or disclosed to the Government or to other persons without restrictions other than a release or disclosure resulting from the sale, transfer, or other assignment of interest in the information to another party or the sale or transfer of some or all of a business entity or its assets to another party.

(f) Flowdown. Contractor shall include this clause in all subcontracts or similar contractual instruments and require its subcontractors or suppliers to do so without alteration, except to identify the parties.

(End of clause)

252.227-7030 TECHNICAL DATA--WITHHOLDING OF PAYMENT (MAR 2000)

(a) If technical data specified to be delivered under this contract, is not delivered within the time specified by this contract or is deficient upon delivery (including having restrictive markings not identified in the list described in the clause at 252.227-7013(e)(2) or 252.227-7018(e)(2) of this contract), the Contracting Officer may until such data is accepted by the Government, withhold payment to the Contractor of ten percent (10%) of the total contract price or amount unless a lesser withholding is specified in the contract. Payments shall not be withheld nor any other action taken pursuant to this paragraph when the Contractor's failure to make timely delivery or to deliver such data without deficiencies arises out of causes beyond the control and without the fault or negligence of the Contractor.

(b) The withholding of any amount or subsequent payment to the Contractor shall not be construed as a waiver of any rights accruing to the Government under this contract.

(End of clause)

252.227-7033 RIGHTS IN SHOP DRAWINGS (APR 1966)

(a) Shop drawings for construction means drawings, submitted to the Government by the Construction Contractor, subcontractor or any lower-tier subcontractor pursuant to a construction

contract, showing in detail (i) the proposed fabrication and assembly of structural elements and (ii) the installation (i.e., form, fit, and attachment details) of materials or equipment. The Government may duplicate, use, and disclose in any manner and for any purpose shop drawings delivered under this contract.

(b) This clause, including this paragraph (b), shall be included in all subcontracts hereunder at any tier.

252.227-7036 DECLARATION OF TECHNICAL DATA CONFORMITY (JAN 1997)

All technical data delivered under this contract shall be accompanied by the following written declaration:

The Contractor, _____, hereby declares that, to the best of its knowledge and belief, the technical data delivered herewith under Contract No. _____ is complete, accurate, and complies with all requirements of the contract.

Date _____

Name and Title of Authorized Official _____

(End of clause)

252.227-7037 VALIDATION OF RESTRICTIVE MARKINGS ON TECHNICAL DATA. (SEP 1999)

(a) Definitions. The terms used in this clause are defined in the Rights in Technical Data--Noncommercial Items clause of this contract.

(b) Contracts for commercial items--presumption of development at private expense. Under a contract for a commercial item, component, or process, the Department of Defense shall presume that a Contractor's asserted use or release restrictions are justified on the basis that the item, component, or process was developed exclusively at private expense. The Department shall not challenge such assertions unless information the Department provides demonstrates that the item, component, or process was not developed exclusively at private expense.

(c) Justification. The Contractor or subcontractor at any tier is responsible for maintaining records sufficient to justify the validity of its markings that impose restrictions on the Government and others to use, duplicate, or disclose technical data delivered or required to be delivered under the contract or subcontract. Except under contracts for commercial items, the Contractor or subcontractor shall be prepared to furnish to the Contracting Officer a written justification for such restrictive markings in response to a challenge under paragraph (e) of this clause.

(d) Prechallenge request for information. (1) The Contracting Officer may request the Contractor or subcontractor to furnish a written explanation for any restriction asserted by the Contractor or subcontractor on the right of the United States or others to use technical data. If, upon review of the explanation submitted, the Contracting Officer remains unable to ascertain the basis of the restrictive marking, the Contracting Officer may further request the Contractor or subcontractor to furnish additional information in the records of, or otherwise in the possession of or reasonably available to, the Contractor or subcontractor to justify the validity of any restrictive marking on technical data delivered or to be delivered under the contract or subcontract (e.g., a statement of facts accompanied with supporting documentation). The Contractor or subcontractor shall submit such written data as requested by the Contracting Officer within the time required or such longer period as may be mutually agreed.

(2) If the Contracting Officer, after reviewing the written data furnished pursuant to paragraph (d)(1) of this clause, or any other available information pertaining to the validity of a restrictive marking, determines that reasonable grounds exist to question the current validity of the marking and that continued adherence to the marking would make impracticable the subsequent competitive acquisition of the item, component, or process to which the technical data relates, the Contracting Officer shall follow the procedures in paragraph (e) of this clause.

(3) If the Contractor or subcontractor fails to respond to the Contracting Officer's request for information under paragraph (d)(1) of this clause, and the Contracting Officer determines that continued adherence to the marking would make impracticable the subsequent competitive acquisition of the item, component, or process to which the technical data relates, the Contracting Officer may challenge the validity of the marking as described in paragraph (e) of this clause.

(e) Challenge.

(1) Notwithstanding any provision of this contract concerning inspection and acceptance, if the Contracting Officer determines that a challenge to the restrictive marking is warranted, the Contracting Officer shall send a written challenge notice to the Contractor or subcontractor asserting the restrictive markings. Such challenge shall--

(i) State the specific grounds for challenging the asserted restriction;

(ii) Require a response within sixty (60) days justifying and providing sufficient evidence as to the current validity of the asserted restriction;

(iii) State that a DoD Contracting Officer's final decision, issued pursuant to paragraph (g) of this clause, sustaining the validity of a restrictive marking identical to the asserted restriction, within the three-year period preceding the challenge, shall serve as justification for the asserted restriction if the validated restriction was asserted by the same Contractor or subcontractor (or any licensee of such Contractor or subcontractor) to which such notice is being provided; and

(iv) State that failure to respond to the challenge notice may result in issuance of a final decision pursuant to paragraph (f) of this clause.

(2) The Contracting Officer shall extend the time for response as appropriate if the Contractor or subcontractor submits a written request showing the need for additional time to prepare a response.

(3) The Contractor's or subcontractor's written response shall be considered a claim within the meaning of the Contract Disputes Act of 1978 (41 U.S.C. 601, et seq.), and shall be certified in the form prescribed at 33.207 of the Federal Acquisition Regulation, regardless of dollar amount.

(4) A Contractor or subcontractor receiving challenges to the same restrictive markings from more than one Contracting Officer shall notify each Contracting Officer of the existence of more than one challenge. The notice shall also state which Contracting Officer initiated the first in time unanswered challenge. The Contracting Officer initiating the first in time unanswered challenge after consultation with the Contractor or subcontractor and the other Contracting Officers, shall formulate and distribute a schedule for responding to each of the challenge notices to all interested parties. The schedule shall afford the Contractor or subcontractor an opportunity to respond to each challenge notice. All parties will be bound by this schedule.

(f) Final decision when Contractor or subcontractor fails to respond. Upon a failure of a Contractor or subcontractor to submit any response to the challenge notice, other than a failure to respond under a contract for commercial items, the Contracting Officer will issue a final decision to the Contractor or subcontractor in accordance with the Disputes clause of this contract pertaining to the validity of the asserted restriction. This final decision shall be issued as soon as possible after the expiration of the time period of paragraph (e)(1)(ii) or (e)(2) of this clause. Following issuance of the final decision, the Contracting Officer will comply with the procedures in paragraphs (g)(2) (ii) through (iv) of this clause.

(g) Final decision when Contractor or subcontractor responds.

(1) if the Contracting Officer determines that the Contractor or subcontractor has justified the validity of the restrictive marking, the Contracting Officer shall issue a final decision to the Contractor or subcontractor sustaining the validity of the restrictive marking, and stating that the Government will continue to be bound by the restrictive marking. This final decision shall be issued within sixty (60) days after receipt of the Contractor's or subcontractor's response to the challenge notice, or within such longer period that the Contracting Officer has notified the Contractor or subcontractor that the Government will require. The notification of a longer period for issuance of a final decision will be made within sixty (60) days after receipt of the response to the challenge notice.

(2)(i) If the Contracting Officer determines that the validity of the restrictive marking is not justified, the Contracting Officer shall issue a final decision to the Contractor or subcontractor in accordance with the Disputes clause of this contract. Notwithstanding paragraph (e) of the Disputes clause, the final decision shall be issued within sixty (60) days after receipt of the Contractor's or subcontractor's response to the challenge notice, or within such longer period that the Contracting Officer has notified the Contractor or subcontractor of the longer period that the

Government will require. The notification of a longer period for issuance of a final decision will be made within sixty (60) days after receipt of the response to the challenge notice.

(ii) The Government agrees that it will continue to be bound by the restrictive marking of a period of ninety (90) days from the issuance of the Contracting Officer's final decision under paragraph (g)(2)(i) of this clause. The Contractor or subcontractor agrees that, if it intends to file suit in the United States Claims Court it will provide a notice of intent to file suit to the Contracting Officer within ninety (90) days from the issuance of the Contracting Officer's final decision under paragraph (g)(2)(i) of this clause. If the Contractor or subcontractor fails to appeal, file suit, or provide a notice of intent to file suit to the Contracting Officer within the ninety (90)-day period, the Government may cancel or ignore the restrictive markings, and the failure of the Contractor or subcontractor to take the required action constitutes agreement with such Government action.

(iii) The Government agrees that it will continue to be bound by the restrictive marking where a notice of intent to file suit in the United States Claims Court is provided to the Contracting Officer within ninety (90) days from the issuance of the final decision under paragraph (g)(2)(i) of this clause. The Government will no longer be bound, and the Contractor or subcontractor agrees that the Government may strike or ignore the restrictive markings, if the Contractor or subcontractor fails to file its suit within one (1) year after issuance of the final decision. Notwithstanding the foregoing, where the head of an agency determines, on a nondelegable basis, that urgent or compelling circumstances will not permit waiting for the filing of a suit in the United States Claims Court, the Contractor or subcontractor agrees that the agency may, following notice to the Contractor or subcontractor, authorize release or disclosure of the technical data. Such agency determination may be made at any time after issuance of the final decision and will not affect the Contractor's or subcontractor's right to damages against the United States where its restrictive markings are ultimately upheld or to pursue other relief, if any, as may be provided by law.

(iv) The Government agrees that it will be bound by the restrictive marking where an appeal or suit is filed pursuant to the Contract Disputes Act until final disposition by an agency Board of Contract Appeals or the United States Claims Court. Notwithstanding the foregoing, where the head of an agency determines, on a nondelegable basis, following notice to the Contractor that urgent or compelling circumstances will not permit awaiting the decision by such Board of Contract Appeals or the United States Claims Court, the Contractor or subcontractor agrees that the agency may authorize release or disclosure of the technical data. Such agency determination may be made at any time after issuance of the final decision and will not affect the Contractor's or subcontractor's right to damages against the United States where its restrictive markings are ultimately upheld or to pursue other relief, if any, as may be provided by law.

(h) Final disposition of appeal or suit. (1) If the Contractor or subcontractor appeals or files suit and if, upon final disposition of the appeal or suit, the Contracting Officer's decision is sustained--

(i) The restrictive marking on the technical data shall be cancelled, corrected or ignored; and

(ii) If the restrictive marking is found not to be substantially justified, the Contractor or subcontractor, as appropriate, shall be liable to the Government for payment of the cost to the Government of reviewing the restrictive marking and the fees and other expenses (as defined in 28 U.S.C. 2412(d)(2)(A)) incurred by the Government in challenging the marking, unless special circumstances would make such payment unjust.

(2) If the Contractor or subcontractor appeals or files suit and if, upon final disposition of the appeal or suit, the Contracting Officer's decision is not sustained--

(i) The Government shall continue to be bound by the restrictive marking; and

(ii) The Government shall be liable to the Contractor or subcontractor for payment of fees and other expenses (as defined in 28 U.S.C. 2412(d)(2)(A)) incurred by the Contractor or subcontractor in defending the marking, if the challenge by the Government is found not to have been made in good faith.

(i) Duration of right to challenge. The Government may review the validity of any restriction on technical data, delivered or to be delivered under a contract, asserted by the Contractor or subcontractor. During the period within three (3) years of final payment on a contract or within three (3) years of delivery of the technical data to the Government, whichever is later, the Contracting Officer may review and make a written determination to challenge the restriction. The Government may, however, challenge a restriction on the release, disclosure or use of technical data at any time if such technical data--

(1) Is publicly available;

(2) Has been furnished to the United States without restriction; or

(3) Has been otherwise made available without restriction. Only the Contracting Officer's final decision resolving a formal challenge by sustaining the validity of a restrictive marking constitutes "validation" as addressed in 10 U.S.C. 2321.

(j) Decision not to challenge. A decision by the Government, or a determination by the Contracting Officer, to not challenge the restrictive marking or asserted restriction shall not constitute "validation."

(k) Privity of contract. The Contractor or subcontractor agrees that the Contracting Officer may transact matters under this clause directly with subcontractors at any tier that assert restrictive markings. However, this clause neither creates nor implies privity of contract between the Government and subcontractors.

(l) Flowdown. The Contractor or subcontractor agrees to insert this clause in contractual instruments with its subcontractors or suppliers at any tier requiring the delivery of technical data, except contractual instruments for commercial items or commercial components.

(End of clause)

252.231-7000 SUPPLEMENTAL COST PRINCIPLES (DEC 1991)

When the allowability of costs under this contract is determined in accordance with part 31 of the Federal Acquisition Regulation (FAR), allowability shall also be determined in accordance with part 231 of the Defense FAR Supplement, in effect on the date of this contract.

(End of clause)

252.243-7001 PRICING OF CONTRACT MODIFICATIONS (DEC 1991)

When costs are a factor in any price adjustment under this contract, the contract cost principles and procedures in FAR part 31 and DFARS part 231, in effect on the date of this contract, apply.

252.243-7002 REQUESTS FOR EQUITABLE ADJUSTMENT (MAR 1998)

(a) The amount of any request for equitable adjustment to contract terms shall accurately reflect the contract adjustment for which the Contractor believes the Government is liable. The request shall include only costs for performing the change, and shall not include any costs that already have been reimbursed or that have been separately claimed. All indirect costs included in the request shall be properly allocable to the change in accordance with applicable acquisition regulations.

(b) In accordance with 10 U.S.C. 2410(a), any request for equitable adjustment to contract terms that exceeds the simplified acquisition threshold shall bear, at the time of submission, the following certificate executed by an individual authorized to certify the request on behalf of the Contractor:

I certify that the request is made in good faith, and that the supporting data are accurate and complete to the best of my knowledge and belief.

(Official's Name)

(Title)

(c) The certification in paragraph (b) of this clause requires full disclosure of all relevant facts, including--

(1) Cost or pricing data if required in accordance with subsection 15.403-4 of the Federal Acquisition Regulation (FAR); and

(2) Information other than cost or pricing data, in accordance with subsection 15.403-3 of the FAR, including actual cost data and data to support any estimated costs, even if cost or pricing data are not required.

(d) The certification requirement in paragraph (b) of this clause does not apply to----

(1) Requests for routine contract payments; for example, requests for payment for accepted supplies and services, routine vouchers under a cost-reimbursement type contract, or progress payment invoices; or

(2) Final adjustment under an incentive provision of the contract.

252.247-7023 TRANSPORTATION OF SUPPLIES BY SEA (MAR 2000)

(a) Definitions. As used in this clause --

(1) "Components" means articles, materials, and supplies incorporated directly into end products at any level of manufacture, fabrication, or assembly by the Contractor or any subcontractor.

(2) "Department of Defense" (DoD) means the Army, Navy, Air Force, Marine Corps, and defense agencies.

(3) "Foreign flag vessel" means any vessel that is not a U.S.-flag vessel.

(4) "Ocean transportation" means any transportation aboard a ship, vessel, boat, barge, or ferry through international waters.

(5) "Subcontractor" means a supplier, materialman, distributor, or vendor at any level below the prime contractor whose contractual obligation to perform results from, or is conditioned upon, award of the prime contract and who is performing any part of the work or other requirement of the prime contract.

(6) "Supplies" means all property, except land and interests in land, that is clearly identifiable for eventual use by or owned by the DoD at the time of transportation by sea.

(i) An item is clearly identifiable for eventual use by the DoD if, for example, the contract documentation contains a reference to a DoD contract number or a military destination.

(ii) "Supplies" includes (but is not limited to) public works; buildings and facilities; ships; floating equipment and vessels of every character, type, and description, with parts, subassemblies, accessories, and equipment; machine tools; material; equipment; stores of all kinds; end items; construction materials; and components of the foregoing.

(7) "U.S.-flag vessel" means a vessel of the United States or belonging to the United States, including any vessel registered or having national status under the laws of the United States.

(b)(1) The Contractor shall use U.S.-flag vessels when transporting any supplies by sea under this contract.

(2) A subcontractor transporting supplies by sea under this contract shall use U.S.-flag vessels if--

(i) This contract is a construction contract; or

(ii) The supplies being transported are--

(A) Noncommercial items; or

(B) Commercial items that--

(1) The Contractor is reselling or distributing to the Government without adding value (generally, the Contractor does not add value to items that it contracts for f.o.b. destination shipment);

(2) Are shipped in direct support of U.S. military contingency operations, exercises, or forces deployed in humanitarian or peacekeeping operations; or

(3) Are commissary or exchange cargoes transported outside of the Defense Transportation System in accordance with 10 U.S.C. 2643.

(c) The Contractor and its subcontractors may request that the Contracting Officer authorize shipment in foreign-flag vessels, or designate available U.S.-flag vessels, if the Contractor or a subcontractor believes that --

(1) U.S.-flag vessels are not available for timely shipment;

(2) The freight charges are inordinately excessive or unreasonable; or

(3) Freight charges are higher than charges to private persons for transportation of like goods.

(d) The Contractor must submit any request for use of other than U.S.-flag vessels in writing to the Contracting Officer at least 45 days prior to the sailing date necessary to meet its delivery schedules. The Contracting Officer will process requests submitted after such date(s) as expeditiously as possible, but the Contracting Officer's failure to grant approvals to meet the shipper's sailing date will not of itself constitute a compensable delay under this or any other clause of this contract. Requests shall contain at a minimum --

(1) Type, weight, and cube of cargo;

(2) Required shipping date;

(3) Special handling and discharge requirements;

(4) Loading and discharge points;

(5) Name of shipper and consignee;

(6) Prime contract number; and

(7) A documented description of efforts made to secure U.S.-flag vessels, including points of contact (with names and telephone numbers) with at least two U.S.-flag carriers contacted. Copies of telephone notes, telegraphic and facsimile message or letters will be sufficient for this purpose.

(e) The Contractor shall, within 30 days after each shipment covered by this clause, provide the Contracting Officer and the Division of National Cargo, Office of Market Development, Maritime Administration, U.S. Department of Transportation, Washington, DC 20590, one copy of the rated on board vessel operating carrier's ocean bill of lading, which shall contain the following information --

(1) Prime contract number;

(2) Name of vessel;

(3) Vessel flag of registry;

(4) Date of loading;

(5) Port of loading;

(6) Port of final discharge;

(7) Description of commodity;

(8) Gross weight in pounds and cubic feet if available;

(9) Total ocean freight in U.S. dollars; and

(10) Name of the steamship company.

(f) The Contractor agrees to provide with its final invoice under this contract a representation that to the best of its knowledge and belief --

(1) No ocean transportation was used in the performance of this contract;

(2) Ocean transportation was used and only U.S.-flag vessels were used for all ocean shipments under the contract;

(3) Ocean transportation was used, and the Contractor had the written consent of the Contracting Officer for all non-U.S.-flag ocean transportation; or

(4) Ocean transportation was used and some or all of the shipments were made on non-U.S.-flag vessels without the written consent of the Contracting Officer. The Contractor shall describe

these shipments in the following format:

ITEM DESCRIPTION	CONTRACT LINE ITEMS	QUANTITY

TOTAL_____

(g) If the final invoice does not include the required representation, the Government will reject and return it to the Contractor as an improper invoice for the purposes of the Prompt Payment clause of this contract. In the event there has been unauthorized use of non-U.S.-flag vessels in the performance of this contract, the Contracting Officer is entitled to equitably adjust the contract, based on the unauthorized use.

(h) The Contractor shall include this clause, including this paragraph (h), in all subcontractors under this contract that--

(1) Exceed the simplified acquisition threshold in Part 2 of the Federal Acquisition Regulation; and

(2) Are for a type of supplies described in paragraph (b)(3) of this clause.

(End of clause)

252.247-7024 NOTIFICATION OF TRANSPORTATION OF SUPPLIES BY SEA (MAR 2000)

(a) The Contractor has indicated by the response to the solicitation provision, Representation of Extent of Transportation by Sea, that it did not anticipate transporting by sea any supplies. If, however, after the award of this contract, the Contractor learns that supplies, as defined in the Transportation of Supplies by Sea clause of this contract, will be transported by sea, the Contractor --

(1) Shall notify the Contracting Officer of that fact; and

(2) Hereby agrees to comply with all the terms and conditions of the Transportation of Supplies by Sea clause of this contract.

(b) The Contractor shall include this clause; including this paragraph (b), revised as necessary to reflect the relationship of the contracting parties--

(1) In all subcontracts under this contract, if this contract is a construction contract; or

(2) If this contract is not a construction contract, in all subcontracts under this contract that are for--

(i) Noncommercial items; or

(ii) Commercial items that--

(A) The Contractor is reselling or distributing to the Government without adding value (generally, the Contractor does not add value to items that it subcontracts for f.o.b. destination shipment);

(B) Are shipped in direct support of U.S. military contingency operations, exercises, or forces deployed in humanitarian or peacekeeping operations; or

(C) Are commissary or exchange cargoes transported outside of the Defense Transportation System in accordance with 10 U.S.C. 2643.

(End of clause)

PART III
LIST OF DOCS, EXHIBITS AND ATTACHMENTS
SECTION J

TABLE OF CONTENTS

CLAUSE PAGE

J01 CONTRACT AND REFERENCE DRAWINGS 2

J02 PERFORMANCE EVALUATION FOR SERVICE & SUPPLY CONTRACTS 3

J03 ENG FORM 2454 3

PART II
LIST OF DOCS, EXHIBITS AND ATTACHMENTS
SECTION J

J01 CONTRACT AND REFERENCE DRAWINGS

The following drawings shall form a part of this solicitation. Please note that Drawings will be provided to the successful bidder in electronic file form:

A. Contract Drawings

Drawing No. 556-B105-01, Rev 1, LINES PLAN
Drawing No. 556-B105-02, Rev 1, FRAMES & OFFSETS (2 SHTS)
Drawing No. 556-B130-01, Rev 1, TANK CAPACITY PLAN
Drawing No. 556-B205-01, Rev 1, OUTBOARD PROFILE
Drawing No. 556-B215-01, Rev 1, GENERAL ARRANGEMENT (2 SHTS)
Drawing No. 556-B233-01, Rev 1, PILOTHOUSE DETAILS
Drawing No. 556-B245-01, Rev 1, HOLD & MACHINERY ARRANGEMENT
Drawing No. 556-B301-02, Rev 1, INBOARD PROFILE
Drawing No. 556-B306-01, Rev 1, TRANSVERSE & LONG'L STRUCTURAL SECTIONS
Drawing No. 556-B307-01, Rev 1, DECK & BOTTOM STRUCTURE
Drawing No. 556-B605-01, Rev 1, PROPULSION & SHAFTING ARRANGEMENT
Drawing No. 556-B612-01, Rev 1, STEERING RUDDER ARRANGEMENT
Drawing No. 556-B612-02, Rev 1, FLANKING RUDDER ARRANGEMENT
Drawing No. 556-B614-01, Rev 1, 81.00" CT28 KORT NOZZLE
Drawing No. 556-B615-01, Rev 1, STEERING LINKAGE & STRUT

B. Reference Drawings

Drawing No. 556-B313-01, Rev 1, SPRING ISOLATION DETAILS
Drawing No. 518-D410-02, Rev 0, RUBBER FENDERING
Drawing No. 577-D425-01, Rev 0, HANDRAILS, GRATING & WALKWAYS
Drawing No. 610-B460-01, Rev 0, COMMUNICATIONS MARK
Drawing No. 518-D472-01, Rev 0, TRANSDUCER WELL
Drawing No. 518-D669-01, Rev 0, DRAINAGE SYSTEM
Drawing No. 518-D692-01, Rev 0, GENERAL ALARM SYSTEM
Drawing No. 518-D692-02, Rev 0, BILGE ALARM SYSTEM SCHEMATIC
Drawing No. 603-D720-02, Rev 0, ONE LINE DIAGRAM (DC) (2 SHTS)

J02 PERFORMANCE EVALUATION FOR SERVICE & SUPPLY CONTRACTS

In accordance with Federal Acquisition Regulation 42.15 and Engineer Regulation 715-1-19 dated July 5, 1996, this contract action is subject to the requirement for Contractor performance evaluation in the elements listed on the attached form.

At a minimum, the performance evaluation shall be completed within 45 days of completion of each year's performance. Additional (interim) evaluations may be prepared if any element listed is being performed unsatisfactorily.

The period of evaluation will begin on the date of acknowledgment of receipt of the Notice To Proceed and will run concurrent with the performance period of the contract.

J03 ENG FORM 2454

The Contractor shall utilize the ENG Form 2454 for the Construction Plan required by Clause H06.

CONSTRUCTION PROGRESS CHART

REPORTS CONTROL SYMBOL

1. CONTRACTOR	2. PROJECT	3. CONTRACT DESCRIPTION	6. SUBMITTED FOR APPROVAL	DATE	LEGEND BARS: Scheduled progress to date of report Actual progress CURVES: Scheduled progress ..... Actual progress .....
CONTRACT NUMBER	4. LOCATION		7. APPROVAL RECOMMENDED	DATE	
			8. APPROVED	DATE	

PRIMARY CONTRACT NUMBER	LINE ITEM	WT.	ESTIMATED COST

SCHED. ACTUAL

SCHED. ACTUAL

SCHED. ACTUAL

SCHED. ACTUAL

SCHED. ACTUAL

SCHED. ACTUAL

SCHED. ACTUAL

SCHED. ACTUAL

SCHED. ACTUAL

100 90 80 70 60 50 40 30 20 10 0

ENG FORM 2454 (Transferred) PREVIOUS EDITIONS MAY BE USED

THIS PAGE INTENTIONALLY LEFT BLANK

SECTION K Representations, Certifications and Other Statements of Offerors

CLAUSES INCORPORATED BY FULL TEXT

52.203-2 CERTIFICATE OF INDEPENDENT PRICE DETERMINATION (APR 1985)

(a) The offeror certifies that --

(1) The prices in this offer have been arrived at independently, without, for the purpose of restricting competition, any consultation, communication, or agreement with any other offeror or competitor relating to –

(i) Those prices,

(ii) The intention to submit an offer, or

(iii) The methods of factors used to calculate the prices offered:

(2) The prices in this offer have not been and will not be knowingly disclosed by the offeror, directly or indirectly, to any other offeror or competitor before bid opening (in the case of a sealed bid solicitation) or contract award (in the case of a negotiated solicitation) unless otherwise required by law; and

(3) No attempt has been made or will be made by the offeror to induce any other concern to submit or not to submit an offer for the purpose of restricting competition.

(b) Each signature on the offer is considered to be a certification by the signatory that the signatory --

(1) Is the person in the offeror's organization responsible for determining the prices offered in this bid or proposal, and that the signatory has not participated and will not participate in any action contrary to subparagraphs (a)(1) through (a)(3) of this provision; or

(2) (i) Has been authorized, in writing, to act as agent for the following principals in certifying that those principals have not participated, and will not participate in any action contrary to subparagraphs (a)(1) through (a)(3) of this provison _____ (insert full name of person(s) in the offeror's organization responsible for determining the prices offered in this bid or proposal, and the title of his or her position in the offeror's organization);

(ii) As an authorized agent, does certify that the principals named in subdivision (b)(2)(i) above have not participated, and will not participate, in any action contrary to subparagraphs (a)(1) through (a)(3) above; and

(iii) As an agent, has not personally participated, and will not participate, in any action contrary to subparagraphs (a)(1) through (a)(3) of this provision.

(c) If the offeror deletes or modifies subparagraph (a)(2) of this provision, the offeror must furnish with its offer a signed statement setting forth in detail the circumstances of the disclosure.

(End of provision)

52.203-11 CERTIFICATION AND DISCLOSURE REGARDING PAYMENTS TO INFLUENCE CERTAIN FEDERAL TRANSACTIONS (APR 1991)

(a) The definitions and prohibitions contained in the clause, at FAR 52.203-12, Limitation on Payments to Influence Certain Federal Transactions, included in this solicitation, are hereby incorporated by reference in paragraph (b) of this Certification.

(b) The offeror, by signing its offer, hereby certifies to the best of his or her knowledge and belief that on or after December 23, 1989,--

(1) No Federal appropriated funds have been paid or will be paid to any person for influencing or attempting to influence an officer or employee of any agency, a Member of Congress, an officer or employee of Congress, or an employee of a Member of Congress on his or her behalf in connection with the awarding of any Federal contract, the making of any Federal grant, the making of any Federal loan, the entering into of any cooperative agreement, and the extension, continuation, renewal, amendment or modification of any Federal contract, grant, loan, or cooperative agreement;

(2) If any funds other than Federal appropriated funds (including profit or fee received under a covered Federal transaction) have been paid, or will be paid to any person for influencing or attempting to influence an officer or employee of any agency, a Member of Congress, an officer or employee of Congress or an employee of a Member of Congress on his or her behalf in connection with this solicitation, the offeror shall complete and submit, with its offer, OMB standard form LLL, Disclosure of Lobbying Activities, to the Contracting Officer; and

(3) He or she will include the language of this certification in all subcontract awards at any tier and require that all recipients of subcontract awards in excess of $100,000 shall certify and disclose accordingly.

(c) Submission of this certification and disclosure is a prerequisite for making or entering into this contract imposed by section 1352, Title 31, United States Code. Any person who makes an expenditure prohibited under this provision, shall be subject to a civil penalty of not less than $10,000, and not more than $100,000, for each such failure.

(End of provision)

52.204-3 TAXPAYER IDENTIFICATION (OCT 1998)

(a) Definitions.

“Common parent,” as used in this provision, means that corporate entity that owns or controls an affiliated group of corporations that files its Federal income tax returns on a consolidated basis, and of which the offeror is a member.

“Taxpayer Identification Number (TIN),” as used in this provision, means the number required by the Internal Revenue Service (IRS) to be used by the offeror in reporting income tax and other returns. The TIN may be either a Social Security Number or an Employer Identification Number.

(b) All offerors must submit the information required in paragraphs (d) through (f) of this provision to comply with debt collection requirements of 31 U.S.C. 7701(c) and 3325(d), reporting requirements of 26 U.S.C. 6041, 6041A, and 6050M, and implementing regulations issued by the IRS. If the resulting contract is subject to the payment reporting requirements described in Federal Acquisition Regulation (FAR) 4.904, the failure or refusal by the offeror to furnish the information may result in a 31 percent reduction of payments otherwise due under the contract.

(c) The TIN may be used by the Government to collect and report on any delinquent amounts arising out of the offeror's relationship with the Government (31 U.S.C. 7701(c)(3)). If the resulting contract is subject to the payment reporting requirements described in FAR 4.904, the TIN provided hereunder may be matched with IRS records to verify the accuracy of the offeror's TIN.

(d) Taxpayer Identification Number (TIN).

___ TIN:._____

___ TIN has been applied for.

___ TIN is not required because:

___ Offeror is a nonresident alien, foreign corporation, or foreign partnership that does not have income effectively connected with the conduct of a trade or business in the United States and does not have an office or place of business or a fiscal paying agent in the United States;

___ Offeror is an agency or instrumentality of a foreign government;

___ Offeror is an agency or instrumentality of the Federal Government.

(e) Type of organization.

___ Sole proprietorship;

___ Partnership;

___ Corporate entity (not tax-exempt);

___ Corporate entity (tax-exempt);

___ Government entity (Federal, State, or local);

___ Foreign government;

___ International organization per 26 CFR 1.6049-4;

___ Other _____

(f) Common parent.

___ Offeror is not owned or controlled by a common parent as defined in paragraph (a) of this provision.

___ Name and TIN of common parent:

Name _____

TIN _____

(End of provision)

52.204-5 WOMEN-OWNED BUSINESS (OTHER THAN SMALL BUSINESS) (MAY 1999)

(a) Definition. Women-owned business concern, as used in this provision, means a concern that is at least 51 percent owned by one or more women; or in the case of any publicly owned business, at least 51 percent of its stock is owned by one or more women; and whose management and daily business operations are controlled by one or more women.

(b) Representation. [Complete only if the offeror is a women-owned business concern and has not represented itself as a small business concern in paragraph (b)(1) of FAR 52.219-1, Small Business Program Representations, of this solicitation.] The offeror represents that it ( ) is a women-owned business concern.

(End of provision)

52.209-5 CERTIFICATION REGARDING DEBARMENT, SUSPENSION, PROPOSED DEBARMENT, AND OTHER RESPONSIBILITY MATTERS (DEC 2001)

(a)(1) The Offeror certifies, to the best of its knowledge and belief, that--

(i) The Offeror and/or any of its Principals--

(A) Are ( ) are not ( ) presently debarred, suspended, proposed for debarment, or declared ineligible for the award of contracts by any Federal agency;

(B) Have ( ) have not ( ), within a three-year period preceding this offer, been convicted of or had a civil judgment rendered against them for: commission of fraud or a criminal offense in connection with obtaining, attempting to obtain, or performing a public (Federal, state, or local) contract or subcontract; violation of Federal or state antitrust statutes relating to the submission of offers; or commission of embezzlement, theft, forgery, bribery, falsification or destruction of records, making false statements, tax evasion, or receiving stolen property; and

(C) Are ( ) are not ( ) presently indicted for, or otherwise criminally or civilly charged by a governmental entity with, commission of any of the offenses enumerated in subdivision (a)(1)(i)(B) of this provision.

(ii) The Offeror has ( ) has not ( ), within a three-year period preceding this offer, had one or more contracts terminated for default by any Federal agency.

(2) "Principals," for the purposes of this certification, means officers; directors; owners; partners; and, persons having primary management or supervisory responsibilities within a business entity (e.g., general manager; plant manager; head of a subsidiary, division, or business segment, and similar positions).

THIS CERTIFICATION CONCERNS A MATTER WITHIN THE JURISDICTION OF AN AGENCY OF THE UNITED STATES AND THE MAKING OF A FALSE, FICTITIOUS, OR FRAUDULENT CERTIFICATION MAY RENDER THE MAKER SUBJECT TO PROSECUTION UNDER SECTION 1001, TITLE 18, UNITED STATES CODE.

(b) The Offeror shall provide immediate written notice to the Contracting Officer if, at any time prior to contract award, the Offeror learns that its certification was erroneous when submitted or has become erroneous by reason of changed circumstances.

(c) A certification that any of the items in paragraph (a) of this provision exists will not necessarily result in withholding of an award under this solicitation. However, the certification will be considered in connection with a determination of the Offeror's responsibility. Failure of the Offeror to furnish a certification or provide such additional

information as requested by the Contracting Officer may render the Offeror nonresponsible.

(d) Nothing contained in the foregoing shall be construed to require establishment of a system of records in order to render, in good faith, the certification required by paragraph (a) of this provision. The knowledge and information of an Offeror is not required to exceed that which is normally possessed by a prudent person in the ordinary course of business dealings.

(e) The certification in paragraph (a) of this provision is a material representation of fact upon which reliance was placed when making award. If it is later determined that the Offeror knowingly rendered an erroneous certification, in addition to other remedies available to the Government, the Contracting Officer may terminate the contract resulting from this solicitation for default.

(End of provision)

52.215-6 PLACE OF PERFORMANCE (OCT 1997)

(a) The offeror or respondent, in the performance of any contract resulting from this solicitation, ( ) intends, ( ) does not intend [check applicable block] to use one or more plants or facilities located at a different address from the address of the offeror or respondent as indicated in this proposal or response to request for information.

(b) If the offeror or respondent checks "intends" in paragraph (a) of this provision, it shall insert in the following spaces the required information:

Place of performance (street address, city, state, county, zip code)	Name and address of owner and operator of the plant or facility if other than offeror or respondent
_____.....	_____
_____.....	_____

52.219-1 SMALL BUSINESS PROGRAM REPRESENTATIONS (APR 2002)

(a)(1) The North American Industry Classification System (NAICS) code for this acquisition is 336611.

(2) The small business size standard is 1,000 employees.

(3) The small business size standard for a concern which submits an offer in its own name, other than on a construction or service contract, but which proposes to furnish a product which it did not itself manufacture, is 500 employees.

(b) Representations. (1) The offeror represents as part of its offer that it ( ) is, ( ) is not a small business concern.

(2) (Complete only if the offeror represented itself as a small business concern in paragraph (b)(1) of this provision.) The offeror represents, for general statistical purposes, that it ( ) is, ( ) is not a small disadvantaged business concern as defined in 13 CFR 124.1002.

(3) (Complete only if the offeror represented itself as a small business concern in paragraph (b)(1) of this provision.) The offeror represents as part of its offer that it ( ) is, ( ) is not a women-owned small business concern.

(4) (Complete only if the offeror represented itself as a small business concern in paragraph (b)(1) of this provision.) The offeror represents as part of its offer that it ( ) is, ( ) is not a veteran-owned small business concern.

(5) (Complete only if the offeror represented itself as a veteran-owned small business concern in paragraph (b)(4) of this provision.) The offeror represents as part of its offer that it ( ) is, ( ) is not a service-disabled veteran-owned small business concern.

(6) (Complete only if the offeror represented itself as a small business concern in paragraph (b)(1) of this provision.) The offeror represents, as part of its offer, that--

(i) It ( ) is, ( ) is not a HUBZone small business concern listed, on the date of this representation, on the List of Qualified HUBZone Small Business Concerns maintained by the Small Business Administration, and no material change in ownership and control, principal office, or HUBZone employee percentage has occurred since it was certified by the Small Business Administration in accordance with 13 CFR part 126; and

(ii) It ( ) is, ( ) is not a joint venture that complies with the requirements of 13 CFR part 126, and the representation in paragraph (b)(6)(i) of this provision is accurate for the HUBZone small business concern or concerns that are participating in the joint venture. (The offeror shall enter the name or names of the HUBZone small business concern or concerns that are participating in the joint venture: _____.) Each HUBZone small business concern participating in the joint venture shall submit a separate signed copy of the HUBZone representation.

(c) Definitions. As used in this provision--

Service-disabled veteran-owned small business concern--

(1) Means a small business concern--

(i) Not less than 51 percent of which is owned by one or more service-disabled veterans or, in the case of any publicly owned business, not less than 51 percent of the stock of which is owned by one or more service-disabled veterans; and

(ii) The management and daily business operations of which are controlled by one or more service-disabled veterans or, in the case of a veteran with permanent and severe disability, the spouse or permanent caregiver of such veteran.

(2) Service-disabled veteran means a veteran, as defined in 38 U.S.C. 101(2), with a disability that is service-connected, as defined in 38 U.S.C. 101(16).

"Small business concern," means a concern, including its affiliates, that is independently owned and operated, not dominant in the field of operation in which it is bidding on Government contracts, and qualified as a small business under the criteria in 13 CFR Part 121 and the size standard in paragraph (a) of this provision.

Veteran-owned small business concern means a small business concern--

(1) Not less than 51 percent of which is owned by one or more veterans (as defined at 38 U.S.C. 101(2)) or, in the case of any publicly owned business, not less than 51 percent of the stock of which is owned by one or more veterans; and

(2) The management and daily business operations of which are controlled by one or more veterans.

"Women-owned small business concern," means a small business concern --

(1) That is at least 51 percent owned by one or more women; or in the case of any publicly owned business, at least 51 percent of the stock of which is owned by one or more women; and

(2) Whose management and daily business operations are controlled by one or more women.

(d) Notice.

(1) If this solicitation is for supplies and has been set aside, in whole or in part, for small business concerns, then the clause in this solicitation providing notice of the set-aside contains restrictions on the source of the end items to be furnished.

(2) Under 15 U.S.C. 645(d), any person who misrepresents a firm's status as a small, HUBZone small, small disadvantaged, or women-owned small business concern in order to obtain a contract to be awarded under the preference programs established pursuant to section 8(a), 8(d), 9, or 15 of the Small Business Act or any other provision of Federal law that specifically references section 8(d) for a definition of program eligibility, shall--

(i) Be punished by imposition of fine, imprisonment, or both;

(ii) Be subject to administrative remedies, including suspension and debarment; and

(iii) Be ineligible for participation in programs conducted under the authority of the Act.

(End of provision)

52.219-22 SMALL DISADVANTAGED BUSINESS STATUS (OCT 1999)

(a) General. This provision is used to assess an offeror's small disadvantaged business status for the purpose of obtaining a benefit on this solicitation. Status as a small business and status as a small disadvantaged business for general statistical purposes is covered by the provision at FAR 52.219-1, Small Business Program Representation.

(b) Representations.

(1) General. The offeror represents, as part of its offer, that it is a small business under the size standard applicable to this acquisition; and either--

___ (i) It has received certification by the Small Business Administration as a small disadvantaged business concern consistent with 13 CFR 124, Subpart B; and

(A) No material change in disadvantaged ownership and control has occurred since its certification;

(B) Where the concern is owned by one or more disadvantaged individuals, the net worth of each individual upon whom the certification is based does not exceed $750,000 after taking into account the applicable exclusions set forth at 13 CFR 124.104(c)(2); and

(C) It is identified, on the date of this representation, as a certified small disadvantaged business concern in the database maintained by the Small Business Administration(PRO0Net); or

___ (ii) It has submitted a completed application to the Small Business Administration or a Private Certifier to be certified as a small disadvantaged business concern in accordance with 13 CFR 124, Subpart B, and a decision on that application is pending, and that no material change in disadvantaged ownership and control has occurred since its application was submitted.

(2)___ For Joint Ventures. The offeror represents, as part of its offer, that it is a joint venture that complies with the requirements at 13 CFR 124.1002(f) and that the representation in paragraph (b)(1) of this provision is accurate for the small disadvantaged business concern that is participating in the joint venture. [The offeror

shall enter the name of the small disadvantaged business concern that is participating in the joint venture: _____.]

(c) Penalties and Remedies. Anyone who misrepresents any aspects of the disadvantaged status of a concern for the purposes of securing a contract or subcontract shall:

(1) Be punished by imposition of a fine, imprisonment, or both;

(2) Be subject to administrative remedies, including suspension and debarment; and

(3) Be ineligible for participation in programs conducted under the authority of the Small Business Act.

(End of provision)

52.222-22 PREVIOUS CONTRACTS AND COMPLIANCE REPORTS (FEB 1999)

The offeror represents that --

(a) [ ] It has, [ ] has not participated in a previous contract or subcontract subject to the Equal Opportunity clause of this solicitation;

(b) [ ] It has, [ ] has not, filed all required compliance reports; and

(c) Representations indicating submission of required compliance reports, signed by proposed subcontractors, will be obtained before subcontract awards.

(End of provision)

52.222-25 AFFIRMATIVE ACTION COMPLIANCE (APR 1984)

The offeror represents that

(a) [ ] it has developed and has on file, [ ] has not developed and does not have on file, at each establishment, affirmative action programs required by the rules and regulations of the Secretary of Labor (41 CFR 60-1 and 60-2), or

(b) [ ] has not previously had contracts subject to the written affirmative action programs requirement of the rules and regulations of the Secretary of Labor.

(End of provision)

52.222-38 COMPLIANCE WITH VETERANS' EMPLOYMENT REPORTING REQUIREMENTS (DEC 2001)

By submission of its offer, the offeror represents that, if it is subject to the reporting requirements of 38 U.S.C. 4212(d) (i.e., if it has any contract containing Federal Acquisition Regulation clause 52.222-37, Employment Reports on Special Disabled Veterans, Veterans of the Vietnam Era, and Other Eligible Veterans), it has submitted the most recent VETS-100 Report required by that clause.

(End of provision)

52.223-13 CERTIFICATION OF TOXIC CHEMICAL RELEASE REPORTING (OCT 2000)

(a) Submission of this certification is a prerequisite for making or entering into this contract imposed by Executive Order 12969, August 8, 1995.

(b) By signing this offer, the offeror certifies that--

(1) As the owner or operator of facilities that will be used in the performance of this contract that are subject to the filing and reporting requirements described in section 313 of the Emergency Planning and Community Right-to-Know Act of 1986 (EPCRA) (42 U.S.C. 11023) and section 6607 of the Pollution Prevention Act of 1990 (PPA) (42 U.S.C. 13106), the offeror will file and continue to file for such facilities for the life of the contract the Toxic Chemical Release Inventory Form (Form R) as described in sections 313(a) and (g) of EPCRA and section 6607 of PPA; or

(2) None of its owned or operated facilities to be used in the performance of this contract is subject to the Form R filing and reporting requirements because each such facility is exempt for at least one of the following reasons: (Check each block that is applicable.)

[ ] (i) The facility does not manufacture, process or otherwise use any toxic chemicals listed under section 313(c) of EPCRA, 42 U.S.C. 11023(c);

[ ] (ii) The facility does not have 10 or more full-time employees as specified in section 313.(b)(1)(A) of EPCRA 42 U.S.C. 11023(b)(1)(A);

[ ] (iii) The facility does not meet the reporting thresholds of toxic chemicals established under section 313(f) of EPCRA, 42 U.S.C. 11023(f) (including the alternate thresholds at 40 CFR 372.27, provided an appropriate certification form has been filed with EPA);

[ ] (iv) The facility does not fall within Standard Industrial Classification Code (SIC) major groups 20 through 39 or their corresponding North American Industry Classification System (NAICS) sectors 31 through 33; or

[ ] (v) The facility is not located within any State of the United States, the District of Columbia, the Commonwealth of Puerto Rico, Guam, American Samoa, the United States Virgin Islands, the Northern Mariana Islands, or any other territory or possession over which the United States has jurisdiction.

252.209-7001 DISCLOSURE OF OWNERSHIP OR CONTROL BY THE GOVERNMENT OF A TERRORIST COUNTRY (MAR 1998)

(a) "Definitions."

As used in this provision --

(a) "Government of a terrorist country" includes the state and the government of a terrorist country, as well as any political subdivision, agency, or instrumentality thereof.

(2) "Terrorist country" means a country determined by the Secretary of State, under section 6(j)(1)(A) of the Export Administration Act of 1979 (50 U.S.C. App. 2405(j)(i)(A)), to be a country the government of which has repeatedly provided support for such acts of international terrorism. As of the date of this provision, terrorist countries include: Cuba, Iran, Iraq, Libya, North Korea, Sudan, and Syria.

(3) "Significant interest" means --

(i) Ownership of or beneficial interest in 5 percent or more of the firm's or subsidiary's securities. Beneficial interest includes holding 5 percent or more of any class of the firm's securities in "nominee shares," "street names," or some other method of holding securities that does not disclose the beneficial owner;

(ii) Holding a management position in the firm, such as a director or officer;

(iii) Ability to control or influence the election, appointment, or tenure of directors or officers in the firm;

(iv) Ownership of 10 percent or more of the assets of a firm such as equipment, buildings, real estate, or other tangible assets of the firm; or

(v) Holding 50 percent or more of the indebtness of a firm.

(b) "Prohibition on award."

In accordance with 10 U.S.C. 2327, no contract may be awarded to a firm or a subsidiary of a firm if the government of a terrorist country has a significant interest in the firm or subsidiary or, in the case of a subsidiary, the firm that owns the subsidiary, unless a waiver is granted by the Secretary of Defense.

(c) "Disclosure."

If the government of a terrorist country has a significant interest in the Offeror or a subsidiary of the Offeror, the Offeror shall disclosure such interest in an attachment to its offer. If the Offeror is a subsidiary, it shall also disclose any significant interest the government of a terrorist country has in any firm that owns or controls the subsidiary. The disclosure shall include --

(1) Identification of each government holding a significant interest; and

(2) A description of the significant interest held by each government.

(End of provision)

252.225-7000 BUY AMERICAN ACT--BALANCE OF PAYMENTS PROGRAM CERTIFICATE
(SEP 1999)

(a) Definitions. Domestic end product, qualifying country, qualifying country end product, and qualifying country end product have the meanings given in the Buy American Act and Balance of Payments Program clause of this solicitation.

(b) Evaluation. Offers will be evaluated by giving preference to domestic end products and qualifying country end products over nonqualifying country end products.

(c) Certifications. (1) The Offeror certifies that--

(i) Each end product, except those listed in paragraphs (c) (2) or (3) of this provision, is a domestic end product; and

(ii) Components of unknown origin are considered to have been mined, produced, or manufactured outside the United States or a qualifying country.

(2) The Offeror certifies that the following end products are qualifying country end products:

Qualifying Country End Products

Line Item Number	Country of Origin
_____	_____

(List only qualifying country end products.)

(3) The Offeror certifies that the following end products are nonqualifying country end products:

Nonqualifying Country End Products

Line Item Number	Country of Origin (If known)
_____	_____

(End of provision)

252.247-7022 REPRESENTATION OF EXTENT OF TRANSPORTATION BY SEA (AUG 1992)

(a) The Offeror shall indicate by checking the appropriate blank in paragraph (b) of this provision whether transportation of supplies by sea is anticipated under the resultant contract. The term supplies is defined in the Transportation of Supplies by Sea clause of this solicitation.

(b) Representation. The Offeror represents that it:

____ (1) Does anticipate that supplies will be transported by sea in the performance of any contract or subcontract resulting from this solicitation.

____ (2) Does not anticipate that supplies will be transported by sea in the performance of any contract or subcontract resulting from this solicitation.

(c) Any contract resulting from this solicitation will include the Transportation of Supplies by Sea clause. If the Offeror represents that it will not use ocean transportation, the resulting contract will also include the Defense FAR Supplement clause at 252.247-7024, Notification of Transportation of Supplies by Sea.

(End of provision)

SECTION L Instructions, Conditions and Notices to Bidders

INDEX

L-1 CLAUSES INCORPORATED BY FULL TEXT 2

A. 52.204-6 DATA UNIVERSAL NUMBERING SYSTEM (DUNS) NUMBER (JUN 99)..... 2
B. 52.215-1 INSTRUCTIONS TO OFFERORS--COMPETITIVE ACQUISITION (MAY 2001)..... 3
C. 52.215-20 REQUIREMENTS FOR COST OR PRICING DATA OR INFORMATION OTHER THAN COST OR PRICING DATA (OCT 1997)..... 7
D. 52.216-1 TYPE OF CONTRACT (APR 1984)..... 9
E. 52.233-2 SERVICE OF PROTEST (AUG 1996)..... 9
F. 252.227-70177017 IDENTIFICATION AND ASSERTION OF USE, RELEASE, OR DISCLOSURE RESTRICTIONS. (JUN 1995)..... 9

L-2 PROPOSAL REQUIREMENTS AND EVALUATION CRITERIA..... 12

A. GENERAL REQUIREMENTS..... 12
B. MANAGEMENT EVALUATION CRITERIA..... 13
C. REQUIRED MANAGEMENT PROPOSAL SUBMITTALS..... 13
C1. Organization..... 13
C2. Human Resources for this Project..... 13
C3. Facilities and Equipment..... 13
C4. Project Sub-Contracting Plan..... 14
C5. Project Quality Control Plan..... 14
C6. Project Planning / Schedule..... 14
C7. Financial Condition..... 15
D. SIMILAR DESIGN AND CONSTRUCTION EXPERIENCE EVALUATION CRITERIA..... 15
E. REQUIRED SIMILAR DESIGN AND CONSTRUCTION EXPERIENCE SUBMITTALS..... 15
F. PAST PERFORMANCE EVALUATION CRITERIA..... 15
G. REQUIRED PAST PERFORMANCE SUBMITTALS..... 15
H. PRODUCT EVALUATION CRITERIA..... 15
I. REQUIRED PRODUCT PROPOSAL SUBMITTALS..... 16
I1. List of Proposed Deliverables..... 16
I2. Major Equipment..... 16
I3. Propulsion Control System & Steering Control System..... 16
I4. Noise and Vibration Control..... 16
J. PRICE EVALUATION CRITERIA..... 17
K. REQUIRED PRICE SUBMITTALS..... 17
K1. Price Proposal..... 17

L-1 CLAUSES INCORPORATED BY FULL TEXT

A. 52.204-6 DATA UNIVERSAL NUMBERING SYSTEM (DUNS) NUMBER (JUN 99)

(a) Contractor identification is essential for complying with statutory contract reporting requirements. Therefore, the offeror is requested to enter, in the block with its name and address on the Standard Form 33 or similar document, the annotation "DUNS" followed by the DUNS number which identifies the offeror's name and address exactly as stated in the offer.

(b) If the offeror does not have a DUNS number, it should contact Dun and Bradstreet directly to obtain one. A DUNS number will be provided immediately by telephone at no charge to the offeror. For information on obtaining a DUNS number, the offeror, if located within the United States, should call Dun and Bradstreet at 1-800-333-0505. The offeror should be prepared to provide the following information:

(1) Company name.

(2) Company address.

(3) Company telephone number.

(4) Line of business.

(5) Chief executive officer/key manager.

(6) Date the company was started.

(7) Number of people employed by the company.

(8) Company affiliation.

(c) Offerors located outside the United States may obtain the location and phone number of the local Dun and Bradstreet Information Services office from the Internet Home Page at http://www.customerservice@dnb.com/. If an offeror is unable to locate a local service center, it may send an e-mail to Dun and Bradstreet at globalinfo@dnb.com.

B. 52.215-1 INSTRUCTIONS TO OFFERORS--COMPETITIVE ACQUISITION (MAY 2001)

(a) Definitions. As used in this provision--

"Discussions" are negotiations that occur after establishment of the competitive range that may, at the Contracting Officer's discretion, result in the offeror being allowed to revise its proposal.

In writing, writing, or written means any worded or numbered expression that can be read, reproduced, and later communicated, and includes electronically transmitted and stored information.

"Proposal modification" is a change made to a proposal before the solicitation's closing date and time, or made in response to an amendment, or made to correct a mistake at any time before award.

"Proposal revision" is a change to a proposal made after the solicitation closing date, at the request of or as allowed by a Contracting Officer as the result of negotiations.

"Time," if stated as a number of days, is calculated using calendar days, unless otherwise specified, and will include Saturdays, Sundays, and legal holidays. However, if the last day falls on a Saturday, Sunday, or legal holiday, then the period shall include the next working day.

(b) Amendments to solicitations. If this solicitation is amended, all terms and conditions that are not amended remain unchanged. Offerors shall acknowledge receipt of any amendment to this solicitation by the date and time specified in the amendment(s).

(c) Submission, modification, revision, and withdrawal of proposals.

(1) Unless other methods (e.g., electronic commerce or facsimile) are permitted in the solicitation, proposals and modifications to proposals shall be submitted in paper media in sealed envelopes or packages

(i) Addressed to the office specified in the solicitation, and

(ii) Showing the time and date specified for receipt, the solicitation number, and the name and address of the offeror.

Offerors using commercial carriers should ensure that the proposal is marked on the outermost wrapper with the information in paragraphs (c)(1)(i) and (c)(1)(ii) of this provision.

(2) The first page of the proposal must show--

(i) The solicitation number;

(ii) The name, address, and telephone and facsimile numbers of the offeror (and electronic address if available);

(iii) A statement specifying the extent of agreement with all terms, conditions, and provisions included in the solicitation and agreement to furnish any or all items upon which prices are offered at the price set opposite each item;

(iv) Names, titles, and telephone and facsimile numbers (and electronic addresses if available) of persons authorized to negotiate on the offeror's behalf with the Government in connection with this solicitation; and

(v) Name, title, and signature of person authorized to sign the proposal. Proposals signed by an agent shall be accompanied by evidence of that agent's authority, unless that evidence has been previously furnished to the issuing office.

(3) Submission, modification, or revision, of proposals.

(i) Offerors are responsible for submitting proposals, and any modifications, or revisions, so as to reach the Government office designated in the solicitation by the time specified in the solicitation. If no time is specified in the solicitation, the time for receipt is 4:30 p.m., local time, for the designated Government office on the date that proposal or revision is due.

(ii)(A) Any proposal, modification, or revision received at the Government office designated in the solicitation after the exact time specified for receipt of offers is "late" and will not be considered unless it is received before award is made, the Contracting Officer determines that accepting the late offer would not unduly delay the acquisition; and--

(1) If it was transmitted through an electronic commerce method authorized by the solicitation, it was received at the initial point of entry to the Government infrastructure not later than 5:00 p.m. one working day prior to the date specified for receipt of proposals; or

(2) There is acceptable evidence to establish that it was received at the Government installation designated for receipt of offers and was under the Government's control prior to the time set for receipt of offers; or

(3) It is the only proposal received.

(B) However, a late modification of an otherwise successful proposal that makes its terms more favorable to the Government, will be considered at any time it is received and may be accepted.

(iii) Acceptable evidence to establish the time of receipt at the Government installation includes the time/date stamp of that installation on the proposal wrapper, other documentary evidence of receipt maintained by the installation, or oral testimony or statements of Government personnel.

(iv) If an emergency or unanticipated event interrupts normal Government processes so that proposals cannot be received at the office designated for receipt of proposals by the exact time specified in the solicitation, and urgent Government requirements preclude amendment of the solicitation, the time specified for receipt of proposals will be deemed to be extended to the same time of day specified in the solicitation on the first work day on which normal Government processes resume.

(v) Proposals may be withdrawn by written notice received at any time before award. Oral proposals in response to oral solicitations may be withdrawn orally. If the solicitation authorizes facsimile proposals, proposals may be withdrawn via facsimile received at any time before award, subject to the conditions specified in the provision at 52.215-5, Facsimile Proposals. Proposals may be withdrawn in person by an offeror or an authorized representative, if the identity of the person requesting withdrawal is established and the person signs a receipt for the proposal before award.

(4) Unless otherwise specified in the solicitation, the offeror may propose to provide any item or combination of items.

(5) Offerors shall submit proposals in response to this solicitation in English, unless otherwise permitted by the solicitation, and in U.S. dollars, unless the provision at FAR 52.225-17, Evaluation of Foreign Currency Offers, is included in the solicitation.

(6) Offerors may submit modifications to their proposals at any time before the solicitation closing date and time, and may submit modifications in response to an amendment, or to correct a mistake at any time before award.

(7) Offerors may submit revised proposals only if requested or allowed by the Contracting Officer.

(8) Proposals may be withdrawn at any time before award. Withdrawals are effective upon receipt of notice by the Contracting Officer.

(d) Offer expiration date. Proposals in response to this solicitation will be valid for the number of days specified on the solicitation cover sheet (unless a different period is proposed by the offeror).

(e) Restriction on disclosure and use of data. Offerors that include in their proposals data that they do not want disclosed to the public for any purpose, or used by the Government except for evaluation purposes, shall--

(1) Mark the title page with the following legend: This proposal includes data that shall not be disclosed outside the Government and shall not be duplicated, used, or disclosed--in whole or in part--for any purpose other than to evaluate this proposal. If, however, a contract is awarded to this offeror as a result of--or in connection with-- the submission of this data, the Government shall have the right to duplicate, use, or disclose the data to the extent provided in the resulting contract. This restriction does not limit the Government's right to use information contained in this data if it is obtained from another source without restriction. The data subject to this restriction are contained in sheets [insert numbers or other identification of sheets]; and

(2) Mark each sheet of data it wishes to restrict with the following legend: Use or disclosure of data contained on this sheet is subject to the restriction on the title page of this proposal.

(f) Contract award.

(1) The Government intends to award a contract or contracts resulting from this solicitation to the responsible offeror(s) whose proposal(s) represents the best value after evaluation in accordance with the factors and subfactors in the solicitation.

(2) The Government may reject any or all proposals if such action is in the Government's interest.

(3) The Government may waive informalities and minor irregularities in proposals received.

(4) The Government intends to evaluate proposals and award a contract without discussions with offerors (except clarifications as described in FAR 15.306(a)). Therefore, the offeror's initial proposal should contain the offeror's best terms from a cost or price and technical standpoint. The Government reserves the right to conduct discussions if the Contracting Officer later determines them to be necessary. If the Contracting Officer determines that the number of proposals that would otherwise be in the competitive range exceeds the number at which an efficient competition can be conducted, the Contracting Officer may limit the number of proposals in the competitive range to the greatest number that will permit an efficient competition among the most highly rated proposals.

(5) The Government reserves the right to make an award on any item for a quantity less than the quantity offered, at the unit cost or prices offered, unless the offeror specifies otherwise in the proposal.

(6) The Government reserves the right to make multiple awards if, after considering the additional administrative costs, it is in the Government's best interest to do so.

(7) Exchanges with offerors after receipt of a proposal do not constitute a rejection or counteroffer by the Government.

(8) The Government may determine that a proposal is unacceptable if the prices proposed are materially unbalanced between line items or subline items. Unbalanced pricing exists when, despite an acceptable total evaluated price, the price of one or more contract line items is significantly overstated or understated as indicated by the application of cost or price analysis techniques. A proposal may be rejected if the Contracting Officer determines that the lack of balance poses an unacceptable risk to the Government.

(9) If a cost realism analysis is performed, cost realism may be considered by the source selection authority in evaluating performance or schedule risk.

(10) A written award or acceptance of proposal mailed or otherwise furnished to the successful offeror within the time specified in the proposal shall result in a binding contract without further action by either party.

(11) The Government may disclose the following information in post award debriefings to other offerors:

(i) The overall evaluated cost or price and technical rating of the successful offeror;

(ii) The overall ranking of all offerors, when any ranking was developed by the agency during source selection;

(iii) A summary of the rationale for award; and

(iv) For acquisitions of commercial items, the make and model of the item to be delivered by the successful offeror.

C. 52.215-20 REQUIREMENTS FOR COST OR PRICING DATA OR INFORMATION OTHER THAN COST OR PRICING DATA (OCT 1997)

(a) Exceptions from cost or pricing data.

(1) In lieu of submitting cost or pricing data, offerors may submit a written request for exception by submitting the information described in the following subparagraphs. The Contracting Officer may require additional supporting information, but only to the extent necessary to determine whether an exception should be granted, and whether the price is fair and reasonable.

(i) Identification of the law or regulation establishing the price offered. If the price is controlled under law by periodic rulings, reviews, or similar actions of a governmental body, attach a copy of the controlling document, unless it was previously submitted to the contracting office.

(ii) Commercial item exception. For a commercial item exception, the offeror shall submit, at a minimum, information on prices at which the same item or similar items have previously been sold in the commercial market that is adequate for evaluating the reasonableness of the price for this acquisition. Such information may include--

(A) For catalog items, a copy of or identification of the catalog and its date, or the appropriate pages for the offered items, or a statement that the catalog is on file in the buying office to which the proposal is being submitted. Provide a copy or describe current discount policies and price lists (published or unpublished), e.g., wholesale, original equipment manufacturer, or reseller. Also explain the basis of each offered price and its relationship to the established catalog price, including how the proposed price relates to the price of recent sales in quantities similar to the proposed quantities;

(B) For market-priced items, the source and date or period of the market quotation or other basis for market price, the base amount, and applicable discounts. In addition, describe the nature of the market;

(C) For items included on an active Federal Supply Service Multiple Award Schedule contract, proof that an exception has been granted for the schedule item.

(2) The offeror grants the Contracting Officer or an authorized representative the right to examine, at any time before award, books, records, documents, or other directly pertinent records to verify any request for an exception under this provision, and the reasonableness of price. For items priced using catalog or market prices, or law or regulation, access does not extend to cost or profit information or other data relevant solely to the offeror's determination of the prices to be offered in the catalog or marketplace.

(b) Requirements for cost or pricing data. If the offeror is not granted an exception from the requirement to submit cost or pricing data, the following applies:

(1) The offeror shall prepare and submit cost or pricing data and supporting attachments in accordance with Table 15-2 of FAR 15.408.

As soon as practicable after agreement on price, but before contract award (except for unpriced actions such as letter contracts), the offeror shall submit a Certificate of Current Cost or Pricing Data, as prescribed by FAR 15.406-2.

(End of provision)

D. 52.216-1 TYPE OF CONTRACT (APR 1984)

The Government contemplates award of a firm, fixed price contract resulting from this solicitation.

E. 52.233-2 SERVICE OF PROTEST (AUG 1996)

(a) Protests, as defined in section 33.101 of the Federal Acquisition Regulation, that are filed directly with an agency, and copies of any protests that are filed with the General Accounting Office (GAO), shall be served on the Contracting Officer (addressed as follows) by obtaining written and dated acknowledgment of receipt from:

Robert Sharamatew, Contracting Officer
US Army Engineer District, Philadelphia
Wanamaker Building
100 Penn Square East, Rm 643 South
Philadelphia, PA 19107-3390

(b) The copy of any protest shall be received in the office designated above within one day of filing a protest with the GAO.

F. 252.227-7017 IDENTIFICATION AND ASSERTION OF USE, RELEASE, OR DISCLOSURE RESTRICTIONS. (JUN 1995)

(a) The terms used in this provision are defined in following clause or clauses contained in this solicitation--

(1) If a successful offeror will be required to deliver technical data, the Rights in Technical Data--Noncommercial Items clause, or, if this solicitation contemplates a contract under the Small Business Innovative Research Program, the Rights in Noncommercial Technical Data and Computer Software--Small Business Innovative Research (SBIR) Program clause.

(2) If a successful offeror will not be required to deliver technical data, the Rights in Noncommercial Computer Software and Noncommercial Computer Software Documentation clause, or, if this solicitation contemplates a contract under the Small

Business Innovative Research Program, the Rights in Noncommercial Technical Data and Computer Software--Small Business Innovative Research (SBIR) Program clause.

(b) The identification and assertion requirements in this provision apply only to technical data, including computer software documents, or computer software to be delivered with other than unlimited rights. For contracts to be awarded under the Small Business Innovative Research Program, the notification requirements do not apply to technical data or computer software that will be generated under the resulting contract. Notification and identification is not required for restrictions based solely on copyright.

(c) Offers submitted in response to this solicitation shall identify, to the extent known at the time an offer is submitted to the Government, the technical data or computer software that the Offeror, its subcontractors or suppliers, or potential subcontractors or suppliers, assert should be furnished to the Government with restrictions on use, release, or disclosure.

(d) The Offeror's assertions, including the assertions of its subcontractors or suppliers or potential subcontractors or suppliers shall be submitted as an attachment to its offer in the following format, dated and signed by an official authorized to contractually obligate the Offeror:

Identification and Assertion of Restrictions on the Government's Use, Release, or Disclosure of Technical Data or Computer Software.

The Offeror asserts for itself, or the persons identified below, that the Government's rights to use, release, or disclose the following technical data or computer software should be restricted:

Technical Data or Computer Software to be Furnished With Restrictions *	Basis for Assertion **	Asserted Rights Category ***	Name of Person Asserting Restrictions ****
(LIST) *****	(LIST)	(LIST)	(LIST)

* For technical data (other than computer software documentation) pertaining to items, components, or processes developed at private expense, identify both the deliverable technical data and each such items, component, or process. For computer software or computer software documentation identify the software or documentation.

** Generally, development at private expense, either exclusively or partially, is the only basis for asserting restrictions. For technical data, other than computer software documentation, development refers to development of the item, component, or process to which the data pertain. The Government's rights in computer software documentation generally may not be restricted. For computer software, development refers to the software. Indicate whether development was accomplished exclusively or partially at private expense. If development was not accomplished at private expense, or for computer software documentation, enter the specific basis for asserting restrictions.

*** Enter asserted rights category (e.g., government purpose license rights from a prior contract, rights in SBIR data generated under another contract, limited, restricted, or government purpose rights under this or a prior contract, or specially negotiated licenses).

**** Corporation, individual, or other person, as appropriate.

***** Enter "none" when all data or software will be submitted without restrictions.

Date _____

Printed Name and Title _____

Signature _____

(End of identification and assertion)

(e) An offeror's failure to submit, complete, or sign the notification and identification required by paragraph (d) of this provision with its offer may render the offer ineligible for award.

(f) If the Offeror is awarded a contract, the assertions identified in paragraph (d) of this provision shall be listed in an attachment to that contract. Upon request by the Contracting Officer, the Offeror shall provide sufficient information to enable the Contracting Officer to evaluate any listed assertion.

(End of clause)

L-2 PROPOSAL REQUIREMENTS AND EVALUATION CRITERIA

A. GENERAL REQUIREMENTS

Offerors shall submit three copies of the entire Proposal for evaluation. The Proposal shall include an index of the complete Proposal to identify the content, and to assists in locating the specific elements or topics required to be addressed by the Offerors as outlined in this Section. Page separators or tabs can be used.

Page B-1 of the Solicitation must be filled in and included with the Proposal to reflect the offered price. This page is the Price Proposal, and must be separate or separable from the rest. Price information shall only be displayed on page B-1 and shall not be included anywhere else within the Proposal, to allow for the review by the Government representatives to take place without the influence of price.

The Offerors are advised that each Proposal submitted must be complete, and shall be organized to address the specific elements or topics required, in the sequence outlined in this Section. This is necessary to facilitate and expedite an effective review.

Offerors that submit Proposals that are not complete, may or may not be given the opportunity to submit any additional material, and may be considered non-responsive. As a minimum, the information required in this Section shall be included in each Proposal submitted. Additional data, which would serve to clarify the Proposal, should also be submitted. Any other information deemed necessary by the Contracting Officer for a clear understanding of the Proposal shall be furnished if requested.

Proposals shall not include alternative features offered as options within the Proposal. Each Proposal must be clear as to the services and features to be offered without contingency. This will facilitate a fair and equitable review and evaluation. The same Offeror, however, may send in more than one complete Proposal, to propose alternative features and price.

The Proposals will be reviewed for completeness and evaluated on their merit against the evaluation factors listed below.

Technical Factors:	**Price Factor:**
Management	Price Reasonableness
Similar Design and Construction Experience	
Past Performance	
Product	

The technical factors as a whole are more important than price, however, price remains a significant factor in determining "Best Value."

B. MANAGEMENT EVALUATION CRITERIA

The Management Evaluation Criteria for Award shall be the capability demonstrated by the Offeror to successfully perform and respond to the requirements of this project.

The Offeror shall demonstrate in the Proposal that his Organization has the proper resources available, and has proposed sufficient resources to successfully perform the work required.

C. REQUIRED MANAGEMENT PROPOSAL SUBMITTALS

The following topics must be addressed in narrative form. Drawings or pictures to convey the information are encouraged. Each topic shall be addressed to the degree necessary to provide the reviewers with a clear understanding. As a minimum the information requested below shall be included in each Proposal submitted:

C1. Organization

The Offeror shall provide clear and complete information on his organization as follows:

- Name and type of company.
- Brief history of company.
- Principal ownership, subsidiaries, and corporate affiliations.

C2. Human Resources for this Project

The Offeror shall furnish resumes of the key personnel that will be involved in this project, indicating:

- Academic/Professional qualifications
- Experience/Qualifications of Engineering Personnel
- Experience in related type of work.
- Functional position and job description as it will apply to this project, for each key individual.

C3. Facilities and Equipment

The Offeror shall furnish a description of the facilities and major equipment available and planned to be used on this project. Shop facilities/equipment shall be briefly described and clearly identified in layout drawings or pictures included in the Proposal.

C4. Project Sub-Contracting Plan

If applicable, the Offeror shall describe the extent of sub-Contracting contemplated on this project, and the specific areas to be sub-Contracted.

If any part of Phase II - Engineering, is to be sub-Contracted, the Offeror shall identify the sub-Contractor, and submit the resumes of the key personnel involved.

C5. Project Quality Control Plan

The Offeror shall make a brief description of his Quality Control / Quality Assurance Organization, and how it will be applied to this project. A copy of ISO certification shall be provided, if applicable.

C6. Project Planning / Schedule

The Offeror shall submit with his Proposal, a Plan of Action and Project Schedule, including duration in calendar days for his performance during:

- Phase I – Planning and Scheduling
- Phase II - Engineering
- Phase III - Construction, Testing and Delivery

The planning and scheduling information, shall demonstrate a logical, orderly and workable approach to the Project and the Contract.

Phase durations, as identified in the accepted Proposal, will be inserted into Clause F01 PERFORMANCE, (page F-3) as the performance requirement. Offered durations must be submitted in calendar day format, and shall not exceed the maximum number of days allowed, which is also identified in Clause F01, on page F-2. No additional evaluation credit shall be provided for a schedule that is shorter in duration that the maximum allowable time.

The Government will give Notice to Proceed with Phase II, within 15 days of completion of Phase I – Planning and Scheduling.

The Government will give Notice to Proceed with Phase III, within 15 days of completion of Phase II – Engineering.

After Contract Award, the Contractor is required to perform according to his proposed Project Schedule. Actual performance after Contract Award shall be compared against the proposed schedule, and shall be reported monthly to the COR with the Progress Payment request for approval.

C7. Financial Condition

Describe why the Government should be confident that this project will be successfully completed from a financial standpoint. Report briefly on the Offeror financial resources.

D. SIMILAR DESIGN AND CONSTRUCTION EXPERIENCE EVALUATION CRITERIA

Demonstrated experience during the past five years in construction of vessels of similar type and equivalent level of complexity, with particular emphasis on steel towboats of similar size and complexity.

E. REQUIRED SIMILAR DESIGN AND CONSTRUCTION EXPERIENCE SUBMITTALS

The Offeror shall provide a discussion of the organization's experience during the past five years in construction of vessels of similar type and equivalent level of complexity. The proposal will be evaluated with particular emphasis on steel towboats of similar size and complexity. The discussion shall describe the work done (vessel type), the principal dimensions of the vessels built, and the list of customers.

F. PAST PERFORMANCE EVALUATION CRITERIA

Past Performance means the Offeror's rating in formalized Government or customer surveys, including the Governments assessment of performance in any previous contracts if applicable.

G. REQUIRED PAST PERFORMANCE SUBMITTALS

The Offeror shall provide a discussion of his Past Performance, making reference to his rating in formalized Government or customer surveys as applicable. If applicable, list any Contract that was terminated for the convenience of the Government within the past three years and any Contract that was terminated for default in the last 5 years. Explain the circumstances. If none, please so indicate.

H. PRODUCT EVALUATION CRITERIA

The criteria for Product Evaluation of the Proposals is based on the assessment of the offered deliverables, equipment and features to provide quality, safety, performance and reliability in the proposed towboats.

I. REQUIRED PRODUCT PROPOSAL SUBMITTALS

I1. List of Proposed Deliverables

The Offeror shall provide a list of proposed deliverables for the Contractor's performance during Phase II – Engineering, such as a drawing index and calculations index (HVAC, Structural, etc.). Specific emphasis shall be on proposed deliverables beyond the minimum requirements of Section H.

I2. Major Equipment

The Offeror shall provide the proposed make/model of the following major equipment and features offered for each vessel:

a. Propulsion System (Main Engines, Reduction Gears, and Propellers)
b. Generators
c. Engine Cooling System
d. Utility Boat & its Engines
e. Deck Cranes, Winches and Capstans
f. Coating System
g. Silencers
h. Air Conditioning System
i. Joinery System

The Offeror shall provide any additional narrative description that may clarify the Proposal, and demonstrate quality, enhanced safety, improved performance and reliability of the proposed towboat.

I3. Propulsion Control System & Steering Control System

The Offeror shall provide a brief description of the proposed Propulsion Control and Steering Control System, including the manufacturer and model numbers of their power supplies and specifically discussing their ability to be interfaced to comply with the requirements of the specification (Clause C615 Steering System). The Offeror shall provide a brief narrative description of any special features offered that may clarify the Proposal, demonstrate quality, safety, performance and reliability of the proposed towboats.

I4. Noise and Vibration Control

The Offeror shall provide a brief description of the proposed program for controlling the noise and vibration levels on the vessel to meet the specification requirements (Clause C180). In particular, the Offeror shall discuss the following:

a. The proposed Spring Vibration Isolator System to be used.

b. Any intended noise or vibration analysis that the Offeror proposes to perform during the Engineering phase, as well as information and qualifications of the individual(s) or organization that shall perform the analysis.
c. A brief description of the design and construction measures the Offeror proposes to reduce the transmission of noise and vibration throughout the vessel and meet the requirements of the specification.

J. PRICE EVALUATION CRITERIA

The Price Evaluation Criteria for Award is "Price Reasonableness." The competitiveness of the Offerors' Price Proposal, (page B-1) will be evaluated taking into consideration the most probable price of doing business with the Offeror, based on the merits of the "Management," "Similar Design and Construction Experience," "Past Performance" and "Product" Proposals.

K. REQUIRED PRICE SUBMITTALS

K1. Price Proposal

A price for the work outlined in this RFP for each of the towboats and for the entire job shall be provided with the Proposal by filling in page B-1 of this Solicitation. Note that page B-1 must be returned with the Proposal in separate, or be separable from the rest of the Proposal.

THIS PAGE INTENTIONALLY LEFT BLANK

PART IV - REPRESENTATIONS AND INSTRUCTIONS SECTION M

EVALUATION FACTORS FOR AWARD

The Government intends to award a contract on the basis of "Best Value." The Government will award a contract resulting from this solicitation to the responsible Offeror whose proposal, conforming to the solicitation, will be most advantageous to the Government.

The proposals will be reviewed for completeness against the content requirements outlined in Section L, and evaluated against the evaluation factors listed below:

Technical Factors:	**Price Factor:**
Management	Price Reasonableness
Similar Design and Construction Experience	
Past Performance	
Product	

The technical factors as a whole are more important than price, however, price remains a significant factor in determining "Best Value."

Further discussion of these factors, format and specific topics to be addressed in the proposal, are listed and described in Section L, "Instructions, Conditions, and Notices to Offerors," which contains the specific proposal submittal requirements pursuant to this Solicitation. Offerors are advised that each proposal submitted shall be complete and in the format required, with information organized as specified in Section L.

Furthermore, each Proposal shall be compatible with Section C - Description / Specification.

All Proposals will be reviewed initially for Proposal submittal compliance and for compliance with the requirements of the technical specifications in Section "C."

The Government may award a contract on the basis of initial proposals received without discussions; therefore, each initial proposal should contain the Offeror's best terms.

The Government reserves the right to award the contract to the Offeror whose proposal is not the lowest in price.

THIS PAGE INTENTIONALLY LEFT BLANK