WEAR LIMITS APPLY ONLY FOR SURVEILANCE INSPECTION OF TOOLS IN USE & RE-CERTIFICATION AFTER USE

REMOVE TOOL FORM SERVICE WHEN ANY WEAR LIMITS ARE REACHED

W1	
W2	
W3	
W4	

THIRD ANGLE PROJECTION
DIMENSIONS ARE IN INCHES

NOTE:

1. LINER MATERIAL: SEAMLESS CARBON STEEL PIPE PER ASTM A106 WITH NiCrB SURFACE COATING .05 MIN. SINGLE THICKNESS
2. UNLESS OTHERWISE SPECIFIED TOLERANCES ARE AS FOLLOWS:
   XX – ±.015
   XXX – ±.005
   ANGLES – ±0°30'
   FINISH – 125

MARKING: LINER MF-M7-38

FORWARD LINER (McFARLAND TAILSHAFT)

MF-M7-38SK03 REVISION NEW

SKETCH-PURCHASE

UNITS

ITEM	QTY	MATRL	SPEC. OR HT. TR.

REVISIONS

COMPONENT		TOOL	MICRO
DRG. NO.	DATE	DATE	
MF-M7-38	ADV. INFO.		

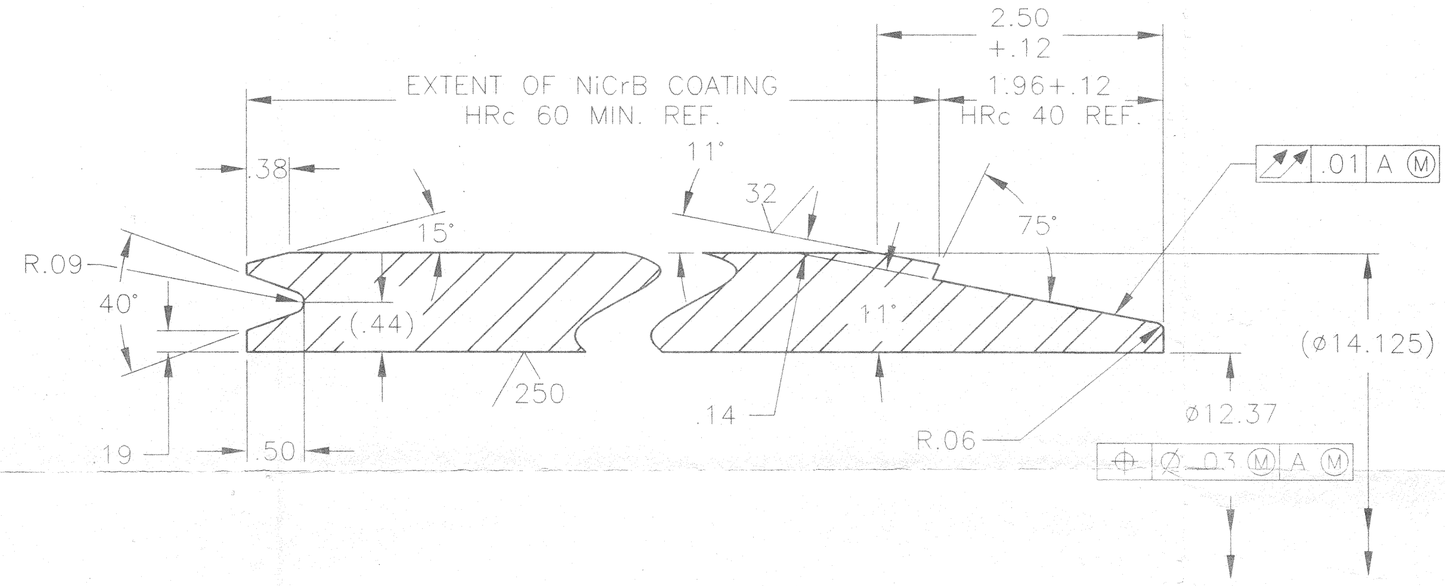

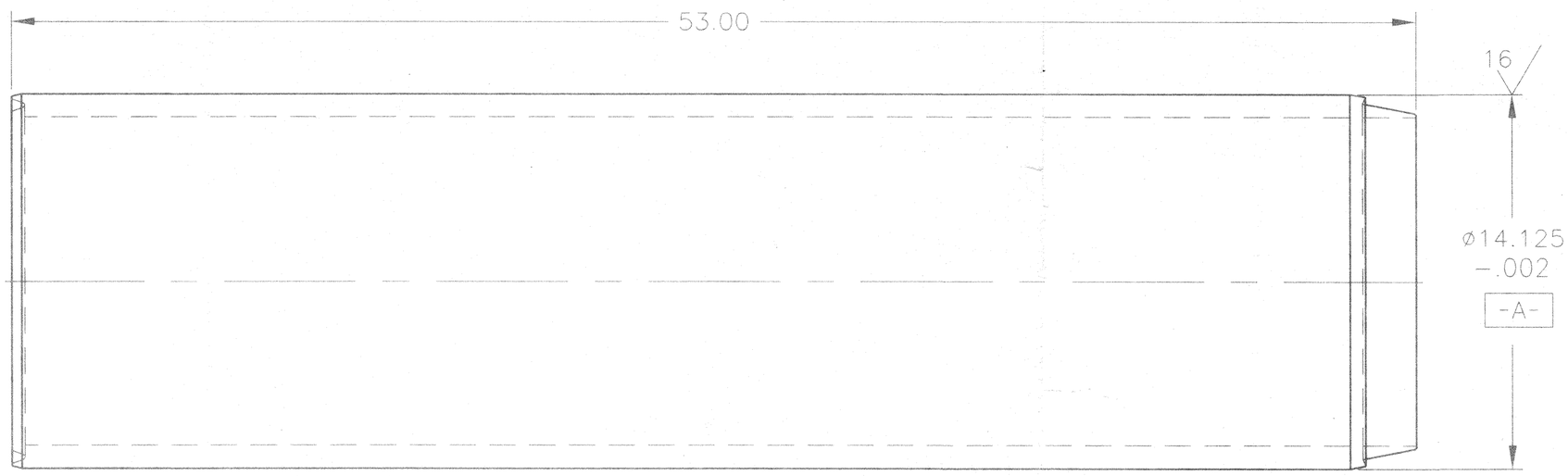

FORWARD LINER

SCALE: 1/4

SCALE: 1/1; 1/4
APPLY DRG. NO. ON DETACHABLE PARTS
REMOVE UNNECCESARY SHARP EDGES

THIS DOCUMENT CONTAINS CRITICAL MILITARY TECHNOLOGY THAT IS OWNED BY THE UNITED STATES GOVERNMENT, WATERVLIET ARSENAL. IT IS NOT TO BE USED FOR ANY PURPOSE OTHER THAN THE PURPOSE FOR WHICH IT IS FURNISHED NOR DISTRIBUTED OR REPRODUCED FOR ANY PURPOSE, NOR ANY PART OF ITS CONTENTS REVEALED IN ANY MANNER, TO PERSONS OTHER THAN THE INDIVIDUALS OR ORGANIZATIONS SPECIFIED TO RECEIVE IT, OR THEIR EMPLOYEES, WITHOUT WRITTEN CONSENT OF WATERVLIET ARSENAL.

DRG. PERTAINS TO

DREDGE McFARLAND

CODE:

DESIGNER	DRAFTSMAN	
T.M.		
CHECKER	CHECKER	PLANNER
J.J.G.		

APPROVED:

TEAM LEADER, McFARLAND SUPPORT TEAM

U.S. ARMY ENGINEER DISTRICT, PHILADELPHIA

DATE: 14 OCTOBER 1998

MF-M7-38SK03C