US Army Corps of Engineers

Marine Design Center

INVITATION FOR BID

FOR ONE

3300 HP STEEL TOWBOAT

MAY 2004

W912BU-04-B-0017

DEPARTMENT OF THE ARMY
Corps of Engineers
Marine Design Center
Philadelphia, PA

THIS PAGE INTENTIONALLY LEFT BLANK

CAUTION TO BIDDERS

All information required by the terms of the Solicitation must be furnished. MISTAKES OR OMISSIONS CAN BE COSTLY. Important items for you to check are included in but not limited to those listed below. This checklist is furnished only to assist you in submitting a proper bid. Check as you read.

[ ] Are you registered in the Central Contractor Database? See DFARS Clause 252.204-7004 "Required Central Contractor Registration" in Section I of this solicitation?

[ ] Are in compliance with the VETS-100 reporting requirement? See FAR 52. 52.222-37 "Employment Reports on Special Disabled Veterans, Veterans of the Vietnam Era, and Other Eligible Veterans in Section" in Section I of this solicitation?

[ ] Have you acknowledged all amendments? Have you submitted your bid on the latest amended bid schedule?

[ ] Have you completed the "Representations and Certifications" {Section K} portion of the Solicitation? Is your Contractor Establishment Code listed on the Standard Form 33?

[ ] Is your bid properly signed by an officer of your company?

[ ] If a bid guarantee is required, is it included with your bid and is it in the proper amount? {Usually 20 percent of the total bid price, including any options or additives.} If your bid guarantee is in the form of a bid bond, is the bond properly signed by both the bidder and surety and are all required seals affixed? A bid guarantee is required when your bid exceeds $100,000.00. A late bid guarantee is treated the same as a late bid.

[ ] Is the name in which you submitted the bid the same on your bid as on the bid bond?

[ ] If required, have you entered a unit price for each bid item? {The solicitation will specifically state when this is necessary.}

[ ] The Government may reject a bid as nonresponsive if it is materially and mathematically unbalanced as to price for any bid item or combination of items. A bid is unbalanced when it is based on prices significantly less than cost for some work and prices which are significantly overstated for other work.

[ ] Are decimals in unit prices in the proper places? Are your figures legible?

[ ] Are the extensions of your unit prices, and your total bid price correct?

[ ] Are all erasures or corrections initialed by the person signing the bid?

[ ] Have you restricted your bid by altering the provisions of the solicitation?

[ ] If you are a large business and your bid is greater than $500,000 for service or $1,000,000.00 for construction have you included your Sub-Contracting Plan in your bid package? (NOTE: PLEASE REFER TO SUBCONTRACTING PLAN IN SOLICITATION FOR GOALS).

[ ] Is the envelope containing your bid properly identified that it is a sealed bid and does it contain the correct solicitation number and bid opening time?

[ ] Will your bid arrive on time? See paragraph entitled "Late Submissions, Modifications, and Withdrawals of Bids" in the Instructions to Bidders {Section L} of the solicitation.

February 24, 2004

This page was intentionally left blank for duplex printing.

SOLICITATION, OFFER AND AWARD

1. THIS CONTRACT IS A RATED ORDER UNDER DPAS (15 CFR 350) ▶ RATING

2. CONTRACT NO.	3. SOLICITATION NO.	4. TYPE OF SOLICITATION	5. DATE ISSUED	6. REQUISITION/PURCHASE NO.
	W912BU-04-B-0017	☒ SEALED BID (IFB) ☐ NEGOTIATED (RFP)	5/14/04	W25PHS-4076-7882

7. ISSUED BY CODE

US ARMY ENGINEER DISTRICT, PHILADELPHIA
WANAMAKER BUILDING, 100 PENN SQUARE EAST
PHILADELPHIA, PENNSYLVANIA 19107-3390

8. ADDRESS OFFER TO *(If other than Item 7)*

NOTE: In sealed bid solicitations "offer" and "offeror" mean "bid" and "bidder".

SOLICITATION

9. Sealed offers in original and 1 copies for furnishing the supplies or services in the Schedule will be received at the place specified in Item 8, or if handcarried, in the depository located in Contracts Branch, Room 643 until 1400 *(Hour)* local time 6/15/04 *(Date)*

CAUTION - LATE Submissions, Modifications, and Withdrawals: See Section L, Provision No. 52.214-7 or 52.215-10. All offers are subject to all terms and conditions contained in this solicitation.

10. FOR INFORMATION CALL: ▶	A. NAME	B. TELEPHONE NO. *(Include area code) (NO COLLECT CALLS)*
	Michelle Bertolin	215-656-6914

11. TABLE OF CONTENTS

(√)	SEC.	DESCRIPTION	PAGE(S)	(√)	SEC.	DESCRIPTION	PAGE(S)
		PART I - THE SCHEDULE				PART II - CONTRACT CLAUSES	
X	A	SOLICITATION/CONTRACT FORM	1	X	I	CONTRACT CLAUSES	91
X	B	SUPPLIES OR SERVICES AND PRICES/COSTS	2			PART III - LIST OF DOCUMENTS, EXHIBITS AND OTHER ATTACH.	
X	C	DESCRIPTION/SPECS./WORK STATEMENT	262	X	J	LIST OF ATTACHMENTS	10
X	D	PACKAGING AND MARKING	4			PART IV - REPRESENTATIONS AND INSTRUCTIONS	
X	E	INSPECTION AND ACCEPTANCE	46	X	K	REPRESENTATIONS, CERTIFICATIONS AND OTHER STATEMENTS OF OFFERORS	18
X	F	DELIVERIES OR PERFORMANCE	10				
X	G	CONTRACT ADMINISTRATION DATA	4	X	L	INSTRS., CONDS., AND NOTICES TO OFFERORS	5
X	H	SPECIAL CONTRACT REQUIREMENTS	30	X	M	EVALUATION FACTORS FOR AWARD	2

OFFER *(Must be fully completed by offeror)*

NOTE: Item 12 does not apply if the solicitation includes the provisions at 52.214-16, Minimum Bid Acceptance Period.

12. In compliance with the above, the undersigned agrees, if this offer is accepted within _____ calendar days *(60 calendar days unless a different period is inserted by the offeror)* from the date for receipt of offers specified above, to furnish any or all items upon which prices are offered at the price set opposite each item, delivered at the designated point(s), within the time specified in the schedule.

13. DISCOUNT FOR PROMPT PAYMENT *(See Section I, Clause No. 52-232-8)* ▶	10 CALENDAR DAYS %	20 CALENDAR DAYS %	30 CALENDAR DAYS %	CALENDAR DAYS %

14. ACKNOWLEDGMENT OF AMENDMENTS *(The offeror acknowledges receipt of amendments to the SOLICITATION for offerors and related documents numbered and dated:*	AMENDMENT NO.	DATE	AMENDMENT NO.	DATE

15A. NAME AND ADDRESS OF OFFEROR — CODE ____ FACILITY ____

16. NAME AND TITLE OF PERSON AUTHORIZED TO SIGN OFFER *(Type or print)*

15B. TELEPHONE NO. *(Include area code)*

☐ 15C. CHECK IF REMITTANCE ADDRESS IS DIFFERENT FROM ABOVE - ENTER SUCH ADDRESS IN SCHEDULE.

17. SIGNATURE

18. OFFER DATE

AWARD *(To be completed by Government)*

19. ACCEPTED AS TO ITEMS NUMBERED

20. AMOUNT

21. ACCOUNTING AND APPROPRIATION

22. AUTHORITY FOR USING OTHER THAN FULL AND OPEN COMPETITION:

☐ 10 U.S.C. 2304(c) ( ) ☐ 41 U.S.C. 253(c) ( )

23. SUBMIT INVOICES TO ADDRESS SHOWN IN ▶ *(4 copies unless otherwise specified)* ITEM

24. ADMINISTERED BY *(If other than Item 7)* CODE

25. PAYMENT WILL BE MADE BY CODE

26. NAME OF CONTRACTING OFFICER *(Type or print)*

27. UNITED STATES OF AMERICA *(Signature of Contracting Officer)*

28. AWARD DATE

IMPORTANT -- Award will be made on this Form, or on Standard Form 26, or by other authorized official written notice.

This page was intentionally left blank for duplex printing.

Design, Construct, and Test one steel towboat for the Corps of Engineers, Vicksburg District, for use in the support of the MAT Sinking Unit revetment operations on the Mississippi River. In addition, up to three option line items may be awarded to procure a floating (spring-isolated) deckhouse, spare parts and delivery of the vessel to Vicksburg District:

ITEM NUMBER	ITEM BASE BID	QTY.	UNIT	UNIT PRICE	TOTAL PRICE
0001	ONE 3300 HP STEEL TOWBOAT (Vicksburg District)	1	VESSEL	XXXX	XXXXXXX
0001AA	PLANNING (The submittals required for "Planning" are listed in contract clause H02.). This item is initiated by a Notice To Proceed (NTP) issued by the Contracting Officer.	1	JOB	XXXX	$_____
0001AB	ENGINEERING & SCHEDULING (The submittals required for "Engineering and Scheduling are listed in contract Clause H02.). This item is initiated only by a Notice To Proceed issued by the Contracting Officer. The Contractor may not start this item until he receives a Notice To Proceed for this item.	1	JOB	XXXX	$_____
0001AC	CONSTRUCTION, TESTING AND ACCEPTANCE AT CONTRACTOR'S FACILITY (The submittals for "Construction, Testing and Acceptance at Contractor's Facility" are listed in contract Clause H02.). This item is initiated only by a Notice To Proceed issued by the Contracting Officer. The Contractor may not start this item until he receives a Notice To Proceed for this item.	1	JOB	XXXX	$_____
TOTAL	ITEM 0001 BASE BID	1	JOB	XXXX	$_____

ITEM NUMBER	ITEM OPTIONS	QTY.	UNIT	UNIT PRICE	TOTAL PRICE
0001AD	FLOATING DECKHOUSE & NOISE CRITERIA (OPTION) for the floating deckhouse and noise criteria as specified by Clauses in Section C under Optional Line Item 0001AD Floating Deckhouse & Noise Criteria.	1	JOB	XXXX	$_____
0001AE	SPARE PARTS (OPTION) for the spare parts as specified by Clauses in Section C800.	1	JOB	XXXX	$_____
0001AF	DELIVERY TO GOVERNMENT FACILITY (OPTION) of the vessel, Ready for Service, in accordance with Clauses E05 Final Acceptance Demonstrations, E07 Provisional Acceptance, E08 Final Acceptance and F02 Delivery.	1	JOB	XXXX	$_____
TOTAL	ITEM 0001 BASE BID WITH ALL OPTIONS	1	JOB	XXXX	$_____

INSERT LOCATION OF THE SHIPYARD WHERE THE WORK WILL BE PERFORMED:

_____

_____

The Government may reject an offer as non-responsive if it is materially and mathematically unbalanced as to price for any offered item or combination of offered items. An offer is unbalanced when it is based on prices significantly less than cost for some work and prices, which are significantly overstated for other work.

Refer to contract Section M for EVALUATION FACTORS FOR AWARD criteria.

If the Government exercises any of the option line items (0001AD, 0001AE or 0001AF), the options will be exercised within 30 days from the award of the contract.

PART I - THE SCHEDULE - SECTION C
DESCRIPTION/SPECIFICATION/WORK STATEMENT

TABLE OF CONTENTS

CLAUSE PAGE

C000 GENERAL 5

C001 MISSION STATEMENT 5
C003 DESIGN STANDARDS 5
C004 CLASSIFICATION & CERTIFICATION 7
C005 VESSEL IDENTIFICATION 8
C006 SCOPE OF WORK 9
C010 DEFINITIONS 11
C025 CONTRACTOR QUALITY STANDARDS 12

C100 SCIENTIFIC 17

C105 HULL GEOMETRY 17
C115 WEIGHT ESTIMATE & CG CONTROL 18
C125 HYDROSTATICS & CURVES OF FORM 20
C130 TANK CAPACITIES 21
C145 TONNAGE MEASUREMENT 22
C150 DAMAGED STABILITY 23
C155 INTACT STABILITY 24
C170 DRY DOCKING PLAN 27
C180 NOISE & VIBRATION 28
C185 TESTS & TRIALS 31

C200 ARRANGEMENTS 33

C201 VESSEL CONFIGURATION 33
C215 GENERAL ARRANGEMENTS 34
C255 CONSOLE ARRANGEMENT 34

C300 STRUCTURE 36

C301 GENERAL 36
C305 HULL STRUCTURE 37
C315 DECKHOUSE 40
C316 STACKS 41
C317 MASTS 42
C320 TANKS 43
C325 SEA CHESTS 46
C326 TRANSDUCER WELLS 47
C330 FOUNDATIONS 48
C398 STRUCTURAL SPECIFIC SPECIAL FEATURES - WELDING 49

C400 OUTFIT 51

C405 ANODES 51
C406 COATING SYSTEM 52
C410 HULL OUTFIT 63
C415 DOORS, WINDOWS, HATCHES & MANHOLES 66
C420 DECK FITTINGS 75
C425 WALKWAYS, RAILINGS, GRATINGS & FLOOR PLATES 76
C427 VERTICAL & INCLINED LADDERS 82
C430 DECK COVERINGS 84
C435 JOINER WORK 86
C436 INSULATION & SHEATHING 87
C437 FURNITURE & FURNISHINGS 92
C440 STEWARDS OUTFIT 100
C445 LIFESAVING & SAFETY 103
C450 UTILITY BOAT 105
C455 DECK CRANE 106
C456 CAPSTAN & WINCHES 107
C457 TROLLEY BEAMS 108
C460 DRAFT MARKS, HULL MARKINGS & NAMEBOARDS 109
C461 NOTICES & MARKINGS 111
C470 INTERIOR COMMUNICATIONS 112
C472 NAVIGATION EQUIPMENT 114
C480 TELEPHONE & DATA COMMUNICATIONS 116
C481 TELEVISION SYSTEM 118

C600 MACHINERY 121

C601 GENERAL REQUIREMENTS FOR PIPING SYSTEMS & MACHINERY . 121
C602 EQUIPMENT & PIPE MARKING 125
C605 PROPULSION SYSTEM 127
C606 PROPELLERS 134
C610 SHAFTING SYSTEM 135
C612 RUDDERS 137
C615 STEERING SYSTEM 139
C630 FUEL OIL SYSTEM 144
C635 LUBE OIL, GEAR OIL & HYDRAULIC OIL SERVICE SYSTEMS 148
C636 WASTE OIL SYSTEM 150
C637 OILY BILGE SYSTEM 152
C640 ENGINE COOLING SYSTEM 154
C650 ENGINE EXHAUST SYSTEMS 157
C660 BILGE & BALLAST SYSTEMS 159
C665 POTABLE WATER SYSTEM 162
C667 SANITARY & SEWAGE SYSTEM 167
C669 DRAINAGE SYSTEM 171
C670 VENTS & SOUNDS 172
C675 FIRE FIGHTING SYSTEMS 173
C677 FIXED FIRE EXTINGUISHING SYSTEM 179
C678 FIRE DETECTION & ALARM SYSTEM 181
C679 FIRE SAFETY EQUIPMENT 182
C685 HEATING, VENTILATION & AIR CONDITIONING 184
C690 COMPRESSED AIR SYSTEM 195
C692 ALARM SYSTEMS 198

C700 ELECTRICAL 201

C701 GENERAL REQUIREMENTS FOR ELECTRICAL SYSTEMS 201
C702 ELECTRICAL EQUIPMENT & CABLING MARKING 202
C705 AC ELECTRICAL SYSTEMS 203
C706 DC ELECTRICAL SYSTEM 204
C710 LOAD ANALYSIS 207
C715 FAULT CURRENT & CIRCUIT BREAKER COORDINATION 208
C720 ONE LINE DIAGRAMS 208
C725 CABLING REQUIREMENTS 209
C730 LIGHTING & RECEPTACLES 211
C733 ELECTRICAL POWER PLANT 222
C740 SWITCHBOARD & POWER CONTROL 227
C745 DISTRIBUTION PANELS 233
C750 MOTORS & CONTROLLERS 235
C755 TRANSFORMERS 239
C760 SHORE POWER SERVICE 241
C765 OFF-VESSEL SERVICE 242

OPTIONAL LINE ITEM 0001AD FLOATING DECKHOUSE & NOISE CRITERIA 244

C115 WEIGHT ESTIMATE & CG CONTROL 244
C180 NOISE & VIBRATION 244
C215 GENERAL ARRANGEMENTS 247
C313 FLOATING DECKHOUSE DESIGN 248
C315 DECKHOUSE 252
C326 TRANSDUCER WELLS 252
C406 COATING SYSTEM 253
C410 HULL OUTFIT 253
C425 WALKWAYS, RAILINGS, GRATINGS & FLOOR PLATES 254
C436 INSULATION & SHEATHING 255
C601 GENERAL REQUIREMENTS FOR PIPING SYSTEMS & MACHINERY . 256
C665 POTABLE WATER SYSTEM 256
C667 SANITARY & SEWAGE SYSTEM 256
C725 CABLING REQUIREMENTS 256

OPTIONAL LINE ITEM 0001AE SPARE PARTS 258

C800 SPARE PARTS 258

C805 MAJOR EQUIPMENT 258
C810 OTHER EQUIPMENT 261

PART I - THE SCHEDULE - SECTION C
DESCRIPTION/SPECIFICATION/WORK STATEMENT

C000 GENERAL

C001 MISSION STATEMENT

The Marine Design Center (MDC) of the U.S. Army Corps of Engineers (USACE) has issued this Request for Proposal, to acquire a self-propelled inland river and intracoastal towboat, conforming to commercial standards. The vessel is intended to serve the U.S. Army Corps of Engineers, Vicksburg District in support of its missions.

A. MISSION

The primary mission of the towboat will be the year-round support of the Revetment operations on the Mississippi, Atchafalaya and Red Rivers, the Gulf Intracoastal Waterway (GIWW), and channel patrol on the Mississippi River.

The vessel also operates as the Vicksburg Harbor fireboat.

B. ENVIRONMENTAL CONSIDERATIONS

The vessel shall be suitable for year-round operation in shallow and drift-strewn rivers.

C003 DESIGN STANDARDS

The towboat shall be designed and constructed in accordance with the latest edition and interpretations of the rules, regulations, requirements and standards of the Legislation, Regulatory Agencies and technical organizations listed as follows or as stipulated in the respective specification clauses.

- U.S. Army Corps of Engineers, Publication No. EM 385-1-1; "Safety and Health Requirements Manual." May be viewed at internet web site: http://www.usace.army.mil/inet/usace-docs/eng-manuals/em385-1-1/toc.htm

- American Bureau of Shipping (ABS) "Rules for Building and Classing Steel Vessels for Service on Rivers and Intracoastal Waterways."

- American Bureau of Shipping (ABS) "Guide For Shipbuilding And Repair Quality Standard For Hull Structure During Construction."

- National Shipbuilding Research Program Publication NSRP 0490, January 1998; "Industrial Standards for Hull Structural Penetrations Design Criteria and Details."

- American Welding Society "Guide for Steel Hull Welding", ANSI/AWS D3.5.85.

- U.S. Coast Guard Regulation 46 CFR Subchapter C - "Uninspected Vessels" (but not for electrical design and installation).

- U.S. Coast Guard Regulation 46 CFR Subchapter J - "Electrical Engineering."

- U.S. Coast Guard Regulation 46 CFR Subchapter S - "Subdivision and Stability."

- U.S. Coast Guard, Navigation Rules and Regulations, International and Inland, COMDTINST M16672.2D.

- U.S. Coast Guard Regulation 33 CFR Part 164, Navigation Safety Regulations.

- U.S. Public Health Service (USPHS) Publication No. 393, "Handbook on Sanitation of Vessel Construction."

- Institute of Electrical and Electronic Engineers Standards, Publication No. IEEE-45 - "IEEE Recommended Practice for Electrical Installations on Shipboard."

- Illuminating Engineering Society, "Recommended Practice for Marine Lighting."

- National Electrical Code (NEC).

C004 CLASSIFICATION & CERTIFICATION

The Contractor shall be responsible for preparing the required drawings and calculations, obtaining regulatory body reviews and approvals, obtaining necessary inspections and surveys during construction and for the certification and classing of the vessel as follows:

- ABS classification for "Maltese Cross A-1 Towing Vessel, River Service with Maltese Cross AMS". USACE shall be designated on the Request for Classification as the owner of the vessel.

- U.S. Public Health Service (FDA) Certificate of Sanitary Construction.

The Contractor shall bear all expenses associated with the acquisition of the required classing and certification.

The recommended ABS point of contact is Mr. Glenn Ashe who may be reached by phone, E-Mail or mail at: (703) 519-0801, Gashe@eagle.org, or 1421 Prince Street, Suite 200, Alexandria, VA 22314.

For the ABS certificate of classification, the owner shall be listed as "U.S. Army Corps of Engineers, Vicksburg District". The owner's address for record shall be listed as CEMVK-OD-RR, 4155 Clay Street, Vicksburg, MS 39180-3435.

If the Contractor intends to launch, test, operate, or tow the vessel "out of class," the Contractor must specifically advise ABS of such intent and incorporate any and all modifications required by that agency for such operation at no additional cost to the Government and with no additional contract time. Any such modification which, in the opinion of the COR, affects the arrangements, operability or suitability of the vessel shall be removed from the vessel by the Contractor at no additional cost or time and the vessel returned to new condition prior to Final Acceptance.

C005 VESSEL IDENTIFICATION

The vessel to be acquired through this solicitation has been assigned the following name and Marine Design Center hull and project numbers:

MDC Hull Number 610
MDC Project Number.....2520
Vessel Name ..... To be determined

The vessel name has not been selected at this time. For the purpose of initial documents and drawing preparation, the following title shall be used:

"M/V LIPSCOMB REPLACEMENT"

Upon selection of the official name for the vessel by the Government, the Contractor shall incorporate the name into all "as-built" documents. The MDC hull number shall be used in lieu of an "Official Number."

C006 SCOPE OF WORK

A. CONTRACTOR'S RESPONSIBILITY

The contract consists of three phases, with options:

Phase I..... Planning
Phase II.....Engineering & Scheduling
Phase III .....Construction, Testing &
.....Acceptance at Contractor's Facility

In accordance with the three phases, the Contractor assumes complete responsibility for designing, building, testing, and delivering the vessel to meet the requirements of this contract. Should the Contractor determine at any time that he is unable to fulfill those responsibilities, he shall notify the COR immediately of the problem experienced and his proposed manner of correction.

B. CONTRACT INTENT

It is intended that the Contractor will be able to bid, and perform further design development of the vessel from the Contract Design provided in this solicitation.

The specifications delineate a "Contract Design" for the vessel. The hull geometry, lightship weight and CG, arrangements, rudders, shafting and engine requirements have been developed and shall be incorporated into the final vessel design without change. Structure, mechanical systems, electrical systems, and tank capacities have been considered sufficiently to verify feasibility and to achieve an adequate level of confidence that the vessel concept will meet the performance and operational requirements, and design objectives of the U.S. Army Corps of Engineers.

The plans and specifications of this solicitation have been prepared in accordance with the referenced design standards. The plans and specifications have not been submitted to ABS, USCG, or USPHS for approval. The Contractor shall prepare a Detailed Design and submit this design for approval to ABS, USPHS, and USACE.

C. DETAILED DESIGN

During Phase II, Engineering & Scheduling, it is the Contractor's responsibility to complete the Detailed Design of the vessel based on the "Contract Design" developed for the vessel. The Detailed Design is the basis for construction and shall be completed prior to the start of construction.

Once the Detailed Design phase has commenced, changes in hull dimensions and subdivision, for other than very minor changes in arrangement, will not be made.

The Detailed Design must be so clear in its intent that the features, characteristics, capabilities, design criteria, margins and success criteria of each component or system cannot be mistaken. The level of detail presented and documented by calculation in the Detailed Design shall be sufficient for all required regulatory approvals, and for the Government's quality assurance function.

D. DRAWINGS PROVIDED & REQUIRED

1. Contract & Reference Drawings

The contract drawings of the "Contract Design" are listed in Section J, Clause J01, Contract & Reference Drawings. The contract drawings are provided along with the specifications for bid purposes as well as to develop the Detailed Design.

Also provided as part of this solicitation are Reference Drawings. Reference Drawings shall be used in conjunction with the Contract Drawings and the specifications to finalize the Detailed Design of the vessel.

It is intended that the Reference Drawings provide general guidance to the Contractor in the methodology intended to develop specific systems or design features as called out in this specification. The exact details presented in the Reference Drawings may not reflect the specific needs of this vessel and further design development is required.

The Reference Drawings provided as part of the solicitation are also listed in Section J, Clause J01.

2. Drawings Required

The minimum drawings required to be completed during the Engineering and Scheduling phase of this contract in order to complete the Detailed Design are listed in Section H, Clause H13, Engineering & Drawings. The requirements for developing the Detailed Design drawings are delineated in Clause H03 with any specific requirements for structure, mechanical or electrical systems defined in their relevant contract clauses.

The requirements for as-built drawings of the completed vessel are defined in Section H, Clause H14, As-Built Drawings.

C010 DEFINITIONS

The following definitions are applicable to phrases and acronyms used throughout this contract:

- COR - Contracting Officer's Representative - a member of the contract management and quality assurance team authorized by the Contracting Officer to perform certain administrative and managerial duties. A copy of the COR's authority letter is furnished to the Contractor.

- USACE – Acronym for United States Army Corps of Engineers.

- MDC – Acronym for the Marine Design Center.

- GFE - Government Furnished Equipment - Equipment, materials or components furnished by the Government to the Contractor for installation in the vessel.

- QC - Quality Control - Quality Control is a function of the Contractor. Refer to clause E03. Quality Assurance (QA) is a function of the Government.

C025 CONTRACTOR QUALITY STANDARDS

The Contractor shall be responsible for the construction of a complete and functioning vessel. The Contractor shall utilize the specified components so as to meet specification requirements utilizing construction and testing methods to ensure that the complete vessel conforms to the intended design.

Inspection by the Marine Design Center is for the purpose of verifying the proper function of the Contractor's quality control measures and is not to be used as a substitute for control of quality by the Contractor.

A. STRUCTURAL MATERIALS

Unless otherwise specified or noted on the Contract Drawings, all structural hull material shall be in accordance with the following specifications:

- American Bureau of Shipping (ABS), "Rules for Building and Classing Steel Vessels" and "Rules for Building and Classing Steel Vessels for Service on Rivers and Intracoastal Waterways."

- Welding Materials - ABS "Approved Welding Electrodes, Wire-Flux and Wire Gas Combination."

B. STANDARD PARTS AND MATERIALS

All articles, fittings, equipment, machinery, supplies, and materials used in the construction and outfitting of the vessel shall be the highest grade, free from defects and imperfections, unused and, be the standard product of reputable manufacturers, to the maximum extent practicable. Any material not specified shall be the best of their kind for the purpose intended.

Materials specified herein to meet the requirements of standard specifications published by national authorities shall conform with the respective editions, including amendments, specified. No salvage materials shall be used in the work.

C. WORKMANSHIP

All labor shall be especially skilled for each kind of work and under competent direction.

In engaging one kind of work with another, marring or damage of previously acceptable construction shall be cause for rejection. All parts of the vessel intended to join or bear upon other parts shall have complete and solid contact and shall fit together without excessive cold work during erection. Shims or liners shall not be used for the purpose of overcoming a bad fit. Lightening holes may be punched or flame-cut and all edges shall have burrs removed. Holes in members having sharp curvature shall be avoided.

D. WELDERS

All welding under this contract shall be done only by welders who have successfully passed qualification tests accepted by the American Bureau of Shipping or other regulatory bodies acceptable to ABS.

The Contractor shall bear the expense of conducting these tests and shall certify, by name to the Contracting Officer, welders who have successfully passed the prescribed tests and hold current, valid certifications.

The Contractor shall require any welder to repeat these tests when in the opinion of the Contracting Officer, the work of the welder indicates a reasonable doubt of his proficiency. In such cases the welder shall be re-certified as above if he successfully passed the retest; otherwise, he shall be disqualified until he has successfully passed the retest.

The Contractor shall maintain records of each welder's certification during the course of the contract. The records are to be available for examination upon request of the Contracting Officer.

E. WELDING

All welding and welding procedures shall be in accordance with the current rules of the American Bureau of Shipping and ANSI/AWS D3.5-85. All welding equipment used on the work shall be of a modern type subject to close control. The electrodes used throughout the work shall be suitable for use with the parent metal at each weld, and be approved by ABS.

Welding procedures, as to direction, length, numbers and sequence of beads, shall be carefully planned to minimize lock-up stresses. Care shall be exercised to produce smooth even beads, especially on all exposed plating and fittings. Beads shall be ground where directed by the Contracting Officer.

The Contractor shall employ appropriate welding procedures and grounding connections to preclude the possibility of anodic erosion of the hull after launching.

F. INSTALLATION

Materials and equipment shall be installed in accordance with the approved recommendations of the manufacturer, and in compliance with the contract documents. The installation shall be accomplished by workmen skilled in this type of work.

G. PLATE FAIRNESS

Steel plating shall be installed using proper welding procedures and sequences to insure fair, undistorted plating panels. The use of filler materials to surface unfair areas is not acceptable.

Maximum allowable plating distortion is depicted in the “Guide For Shipbuilding and Repair Quality Standard for Hull Structure During Construction” available from ABS. Distortion shall not exceed the amounts in this guide.

H. CONSTRUCTION STANDARDS

All material, machinery and equipment shall be new, of current manufacture and suitable for the marine service intended. Spare parts and service shall be readily obtainable.

All material, unless otherwise specified in these specifications or in the drawings, shall be of commercial quality to ASTM, ANSI, or SAE specifications.

During construction and before delivery, the Contractor shall be responsible for protection of all material, equipment, etc., intended for the vessel.

The overweight tolerance of members shall be within the limits defined by the specifications of the American Society for Testing and Materials (ASTM).

All materials shall be free of imperfections due to manufacturing processes and from defects that adversely affect appearance or serviceability.

All sharp edges or projections that constitute a personnel hazard shall be removed or ground smooth. All notches shall have a radius to prevent stress concentrations.

Where aluminum must be attached to dissimilar metals or between dissimilar alloys of aluminum, fasteners shall be of stainless steel of an approved design with insulation as required to eliminate metal-to-metal contact.

All galvanizing shall be done after fabrication by the hot dip process, and the zinc shall be not less than 98% pure. In instances where some types of metals cannot be hot dip galvanized, zinc silicate coating may then be substituted.

THIS PAGE INTENTIONALLY LEFT BLANK

C100 SCIENTIFIC

C105 HULL GEOMETRY

A. CONTRACT DRAWINGS

#610-B105-01 LINES PLAN
#610-B105-02 FRAMES & OFFSETS

B. GENERAL

The hull geometry is defined as shown on the above contract drawings. The hull shape has been developed to maximize the vessel thrust, speed, and maneuverability, and shall not be altered.

C. PRINCIPAL CHARACTERISTICS

The hull geometry is defined as shown on the above contract drawing. The vessel's principal characteristics are as follows:

Length (W/O Fenders) .....144'-0"
Beam (W/O Fenders) .....40'-0"
Hull Depth at Centerline .....11'-7/8"
Design Draft (Full Load) .....8'-3"

If optional line item 0001AD is exercised:

Air Draft (Maximum) .....44'-9"

If optional line item 0001AD is not exercised:

Air Draft (Maximum) .....42'-3"

C115 WEIGHT ESTIMATE & CG CONTROL

A. TARGET LIGHTSHIP WEIGHT & CENTER OF GRAVITY

From the Contract Design, the following were determined:

- Target lightship weight is 686 short tons.
- Target LCG is 70.1 feet aft of Frame #0.

B. WEIGHT & CENTER OF GRAVITY ESTIMATES & MONITORING

The Contractor shall implement a careful weight estimating and monitoring procedure.

The Contractor shall be bound to the target lightship weight and LCG. The lightship weight, VCG, and LCG shall be determined by the Inclining Experiment. See paragraph D below.

If the anticipated draft and trim of the vessel are adversely impacted by unpredicted weight growth, the Contractor shall be obligated to determine the cause of the weight growth and take remedial action to return the weight and LCG to the target.

C. WEIGHT ESTIMATE

During the Engineering & Scheduling Phase of the contract, the Contractor shall prepare a detailed weight estimate for the vessel based on the vessel's Detailed Design. Weights and centers of gravity shall be documented in a spreadsheet type format using the MDC Work Breakdown Structure (WBS).

The detailed weight estimate shall be complete with the Vertical and Horizontal location of the center of gravity of all items included in the estimate. The Transverse center of gravity shall be provided for all items that are not symmetrical about the centerline.

The Contractor shall maintain an updated weight estimate during the Engineering Phase and a revised (lightship) weight estimate shall be submitted to MDC at the conclusion of the Engineering Phase to ensure compliance with the target.

Upon completion of the Construction Phase, the weight estimate shall be updated and a verification of the weight made against the vessel's Inclining.

D. INCLINING EXPERIMENT

Upon the completion of all work, with the vessel in the lightship condition, an Inclining Experiment shall be conducted. The inclining experiment shall be conducted in accordance with ASTM F1321-92, with the vessel in lightship condition, free of liquid loads and with dry bilges.

The Contractor shall provide an inclining report in accordance with the criteria that gives the "as inclined" and the "lightship" load condition displacements and CG locations.

C125 HYDROSTATICS & CURVES OF FORM

Hydrostatic calculations have been performed and curves of form determined during the Contract Design. The successful bidder shall be provided with these documents.

The hydrostatic calculations include the shell plating. The following are the design conditions in the 100% full load condition with ballast:

Design Draft (Full Load) .....8'-3”
Trim.....0'-0”
Displacement..... 871 short tons (fresh water)
LCG (aft of Frame 0) .....62'-11”

The Contractor shall only be required to calculate new hydrostatic properties if the hull geometry (including plate thickness) is changed.

If hydrostatic calculations are performed, they shall be in tabular form and completed for drafts from 1 foot to the deck edge in 3 inch increments. The tabulated hydrostatic curves may be plotted on a standard D size drawing or 8-1/2 inch by 11 inch paper. Resulting calculations shall be presented in graphic form on a grid background. The curves are to include as a minimum:

- displacement in fresh water, full and molded
- center of buoyancy (LCB, VCB)
- tons per inch immersion (TPI)
- longitudinal center of floatation (LCF)
- transverse and longitudinal metacentric heights (KM_L, KM_T)
- moment to trim one inch (MT1”)
- block prismatic and waterplane coefficients (C_b, C_p, C_w)

The hydrostatics shall be performed using the GHS computer software (Creative Systems Inc., Port Townsend, WA (360) 385-6212). The hull definition file (or *.gf file) shall be provided in electronic format (on a 3.5 inch disk or CD ROM) with the hydrostatics submittal.

C130 TANK CAPACITIES

A. CONTRACT DRAWING

#610-B130-01 TANK CAPACITY PLAN

B. DESCRIPTION OF WORK

Tank capacities and locations in the vessel shall be as shown on contract drawing #610-B130-01.

Sounding tables in gallons per inch shall be provided for all tanks in their final configuration. The sounding tables shall be presented in tabular form with one tank per page on 8 1/2" x 11" paper using the GHS computer software. Each table shall include the identity of the tank (as labeled on the drawings), its location in the vessel and the center of gravity (longitudinally, vertical and transversely) of the fluid at each sounding level. The compartmentation definition files shall be submitted in electronic format with the sounding tables.

Innage capacity sounding tables shall be provided for the main fuel oil tanks, fuel oil service tank, fuel oil day tank, lube oil tank, gear oil tank, hydraulic oil tank, oily bilge tank, waste oil tank, gray water holding tank, and sewage holding tank. Tables shall note location of the sounding tube, and location and height of striker plate above the baseline and tank bottom.

C145 TONNAGE MEASUREMENT

The Contractor shall be required to perform a tonnage measurement calculation for this vessel. The calculation shall comply with the U.S. Coast Guard Code of Federal Regulations Title 46 CFR Part 69, Subpart B, Convention Measurement System.

The Contractor shall provide a Certificate of Measurement issued by the measuring organization, as authorized by 46 CFR 69.15, prior to delivery of the vessel.

The tonnage measurement calculation shall include sketches of each deck level with dimensions shown. A table of volumes showing the total for each level and a summation of volumes shall be provided. Any deductions shall be clearly identified.

C150 DAMAGED STABILITY

The vessel shall meet a one compartment damaged stability standard in the most critical loading condition where with any one compartment flooded, the vessel shall maintain positive righting arm and all parts of the hull above the margin line remain above the flooded waterline. The margin line shall be 3 inches below the main deck edge. The hull compartmentation developed during the Contract Design complies with this requirement.

Damaged stability calculations shall show equilibrium water lines, curve of righting arm versus heel angle in 5 degree increments to capsize angle for each flooded compartment. The freeboard shall be reported at the four deck corners, and at each deck knuckle for each damaged condition.

The Contractor shall prepare a damaged stability analysis for the vessel during the Engineering Phase of this contract verifying compliance with this criteria. Any calculations showing a failure to meet this criteria shall be reported in a timely manner to the COR with recommendations for correction. The analysis shall be performed using the GHS computer software and all run files and macros used in calculating the damaged stability shall be submitted with the analysis in electronic format. The analysis shall be repeated using the lightship weight determined by deadweight survey after completion of the vessel (prior to Final Acceptance).

The damaged stability calculations shall be presented in report form with a cover sheet complying with the drawing standards and including a drawing type title block. The report shall include a table of contents, summary, explanation of all assumptions and clear definition of origins and units used, and the finished calculations.

C155 INTACT STABILITY

A. GENERAL

Intact stability calculations shall be performed for the vessel in accordance with U.S. Coast Guard Regulation 46 CFR Subchapter S, section 170.173(e) for protected routes. Specific criteria shall be as follows:

- Positive righting arm to at least 25 degrees of heel.
- No downflooding point to at least 15 degrees of heel.
- At least 10 foot-degrees of righting energy to the smallest of the following angles:
  a. Angle of Maximum Righting Arm
  b. Angle of Downflooding
  c. 40 degrees

The Contractor shall prepare a Trim and Stability analysis for the vessel during the Engineering Phase of the contract documenting compliance with the criteria. The hull compartmentation developed during the Contract Design complies with this requirement. Any calculations showing a failure to meet the criteria noted herein shall be reported in a timely manner to the COR with recommendations for correction.

The Contractor shall take care to verify that all exterior door sills on the main deck level extend above the worst loading condition with downflooding heel angle of 15 degrees. Any such door sill not meeting this requirement shall be raised to 1 inch above the downflooding waterline. See contract Clause C415 for the door requirements.

Thirty days prior to Final Inspection of the vessel, the Contractor shall provide a final Trim and Intact Stability Booklet for that vessel determining loading procedures to maintain a stable platform throughout the loading process. The lightship weight of the vessel shall be that determined from the Inclining Experiment. See contract Clause C115, paragraph D.

The Contractor shall provide intact stability calculations based on the parameters and conditions noted in the following paragraphs.

B. CONDITIONS

- Lightship with no ballast, consumables, personnel or stores
- Lightship with ballast and no consumables, personnel or stores
- 10% consumables (fuel oil, potable water, lube oil, gear oil, hydraulic oil) and 90% waste (gray water and sewage) with a full compliment of personnel and stores, and necessary ballast
- 50% consumables (fuel, potable water, lube oil, gear oil, hydraulic oil) and 50% waste (gray water and sewage) with a full compliment of personnel and stores, and necessary ballast
- 75% consumables (fuel, potable water, lube oil, gear oil, hydraulic oil) and 25% waste (gray water and sewage) with a full compliment of personnel and stores, and necessary ballast
- Full fuel, potable water, lube oil, gear oil, and hydraulic oil, and 10% waste (gray water and sewage) with a full compliment of personnel and stores and necessary ballast

C. PARAMETERS

The vessel shall be capable of meeting the following parameters for all load conditions:

- Sufficient propeller immersion to maintain full thrust
- No trim by the bow for any condition
- No heel for any condition
- Maximum trim by the stern of 1/4 degree for any condition

Water ballast shall be provided if required to achieve the above parameters.

D. CALCULATIONS

The Contractor shall perform calculations showing the following for each condition:

- drafts forward and aft
- LCG, TCG, VCG
- righting arm curve

The calculations shall be performed using the GHS computer software. All run files and macros used in the calculations shall be submitted with the analysis in electronic format.

The intact stability calculation shall be presented in report form with a cover sheet complying with drawing standards and including a drawing type title block (see contract Clause H13). The report shall include a table of contents, summary, explanation of all assumptions and clear definition of origins and units used and the finished calculations.

C170 DRY DOCKING PLAN

The Contractor shall develop a dry docking plan for the vessel, after the completion of the Inclining Experiment and the determination of the vessel's lightship weight. The plan shall be submitted for review and approval by the COR during the construction phase.

The dry docking plan shall be developed to show the blocking arrangement. The blocks used for the docking shall be designed to hold the vessel in the following loaded condition:

- 50% fuel
- 50% gear oil, hydraulic oil and lube oil
- 50% potable water
- Empty sewage holding tank
- Empty gray water holding tank
- Empty waste oil tank
- Empty oily bilge tank

The plan shall show all major hull structure on the bottom including all transverse and longitudinal bulkheads connecting with the bottom shell, all hull penetrations, all grid coolers, any anodes, the transducer well, the sea chest, and other features which could interfere with the setting and shifting of the blocks.

The dry docking plan shall also include an alternate blocking arrangement to allow for the servicing of all areas of the bottom of the vessel.

The plan shall identify the size (foot print) of blocks supporting the hull and the maximum block loading (kips/foot-squared). The blocks shall be located to evenly distribute the loads and avoid undue stresses within the hull structure. Blocks shall be located in way of main structural longitudinal and transverse bulkheads wherever possible. Where blocking is located on frames other than bulkheads, appropriate docking brackets shall be designed and installed within the hull. Docking bracket details shall be shown on the structural drawings. If the end(s) of the vessel are unsupported, the Contractor shall provide calculations with drawing submittal showing that the hull strength is adequate to handle the cantilevered load.

The dry docking plan shall also include the:

- lightship weight determined by the Inclining Experiment, its LCG, and VCG
- full load weight as determined by the as-built Stability Calculations and its LCG
- list of the load condition that the plan was developed for

C180 NOISE & VIBRATION

A. INTRODUCTION

The vessel shall be designed and constructed in accordance with the requirements listed in the paragraphs below. If optional line item 0001AD is exercised for the incorporation of a floating deckhouse, then the requirements for noise and vibration shall be those listed under the optional line item.

B. GENERAL REQUIREMENTS

A noise and vibration program shall be developed during the development of the Detailed Design in order to minimize adverse noise and vibration issues.

During the Engineering & Scheduling phase, the Contractor shall submit a plan outlining the methods to be applied to the vessel construction and equipment installation to minimize noise and vibration. Noise and vibration abating methods shall be included in the Detailed Design.

At the conclusion of the vessel's Tests and Trials, the Contractor shall test and report the airborne noise levels for all compartments and spaces except those compartments designated as tanks and voids.

The tests shall be conducted with machinery in operation as if under a full load towing condition. All ventilation equipment and systems shall be in full operation.

The sound levels reported for each compartment shall be based on the average of the broadband A-weighted sound pressure levels taken at various representative locations of the reverberant field of the compartment or space in question. These measurements shall typically be taken at locations within a space where operating personnel are expected to spend a majority of their time.

A report shall be prepared by the Contractor detailing the test results. The report shall include sketches of the spaces measured with the recorded sound levels denoted at the location of their measurement. Reduced size general arrangement drawings will be acceptable for this purpose. The Contractor shall take corrective action as necessary to achieve the required criteria. The report shall describe any compartments which present a noise hazard according to OSHA regulation, 29 CFR 1910.95 "Occupational Noise Exposure".

C. NOISE CRITERIA

The following noise levels shall not be exceeded within a given space:

HULL LEVEL

Forward Stores	80 dB(A)
Machinery Space	100 dB(A)
Lower Engine Room	110 dB(A)
Shaft Alley	110 dB(A)

MAIN DECK LEVEL

Upper Engine Room	110 dB(A)
Generator Room	110 dB(A)
Steering Gear Room	90 dB(A)
Engineer's Control Room	80 dB(A)
Exterior Deck	80 dB(A)

DECKHOUSE

Galley	75 dB(A)
Mess	65 dB(A)
Crew's Lounge	65 dB(A)
Ship's Office	65 dB(A)
Staterooms	60 dB(A)
Pilothouse	65 dB(A)

Compliance with these limits should be based on the average of the broadband sound pressure levels taken at various representative locations in the reverberant field of the compartment or space in question. Values should be measured using the A-weighted scale with the meter set for slow response.

D. NOISE & VIBRATION CONTROL

Some control measures that shall be considered to meet the criteria are as follows:

- Effective noise barrier around high noise spaces to prevent noise transmission to adjacent spaces, and sound absorbing material around high noise spaces, to reduce contribution of reverberant noise within the space.

- Installing vibration isolators for the diesel generators and all rotating machinery such as pumps and fans in order to reduce noise and vibration transmission through the structure.

- Flexible mounting of ventilation and other service lines.

- Ensuring that all pipe and duct joints are tight and that all penetrations through spaces are sealed.

- Use of low noise components, e.g. tighter tolerances.

- Ensure that the natural frequencies of the foundations of hard mounted equipment to be at least 30% greater than the disturbing frequencies of the equipment.

- Ensure that the local stiffness of the foundation supporting the resilient mounts to be at least 10 times the stiffness of the isolator it supports to result in adequate vibration isolation.

- Ensure that the natural frequencies of the resilient mount systems be sufficiently far from the disturbing frequencies (at least 30% of the nearest mode). If this condition cannot be satisfied, the vibarive force transmission to the foundation should be studied in greater detail and corrective measures taken to meet an acceptable isolation performance.

E. VIBRATION CRITERIA

Based on SNAME Technical & Research Bulletin 2-25 SHIP VIBRATION & NOISE GUIDELINES (1980) as presented in Principles of Naval Architecture,Volume II, (Figure 35, page 306, 1988 edition), the vertical vibration velocity and acceleration shall not exceed the maximums of Zone II. This criteria is the upper limit of vibration level which is noticeable but usually will not adversely affect vessel personnel. The Contractor shall measure these velocities during the testing of the vessel and provide a written report.

C185 TESTS & TRIALS

This vessel and its component parts shall undergo testing and trials in accordance with Section E, contract Clause E05.

THIS PAGE INTENTIONALLY LEFT BLANK

C200 ARRANGEMENTS

C201 VESSEL CONFIGURATION

A. CONTRACT DRAWINGS

#610-B205-01 OUTBOARD PROFILE
#610-B215-01 GENERAL ARRANGEMENT
#610-B233-01 PILOTHOUSE DETAILS
#610-B245-01 HOLD & MACHINERY ARRANGEMENT

B. GENERAL

The configuration of the superstructure, the hull and the deck arrangements for the vessel shall be as shown on the above contract drawings. Watertight bulkheads have been located within the hull to maximize damage stability.

The vessel is arranged to provide ready accessibility to machinery and operating equipment for operation, maintenance, and inspection. Provisions have been made for the removal of the main engines, generators, and other major equipment through hatches or other access. Where equipment, machinery or furnishings have not been shown on the drawings, the Contractor shall provide locations and include that information on subsequent revisions of the above drawings.

There shall be no deviations from the contract drawings without written authorization of the COR.

C215 GENERAL ARRANGEMENTS

A. HULL

The hull depth of the vessel shall be subdivided, as shown on the contract drawings. Subdivisions are provided for transverse and longitudinal bulkheads into the fuel oil, sewage holding and gray water tanks, fuel oil service tank, ballast tanks, forward stores, machinery space, lower engine room, shaft alley, and voids.

B. DECKHOUSE

The deckhouse shall have four full levels of enclosed space above the main deck plus a half deck – electrical plenum (Electronics Room) for equipment below the pilothouse deck. Including the main deck level, the deckhouse shall comprise staterooms with toilet/shower spaces, a galley, a mess, a lounge area, an office, public toilet, work area, laundry, upper machinery room, engineer's control room\office, generator room, steering gear room, and a pilothouse.

C255 CONSOLE ARRANGEMENT

A. CONTRACT DRAWING

#610-B233-01 PILOTHOUSE DETAILS

B. DESCRIPTION OF WORK

A split-type console shall be installed in the pilothouse as shown on the above contract drawing. The console shall contain all controls, alarms, monitoring equipment, communication, and navigation equipment required for the vessel's operation.

The actual position and location of the equipment on the console and in the overhead shall be determined during the construction phase. The console arrangement shall be accepted by the COR prior to fabrication.

THIS PAGE INTENTIONALLY LEFT BLANK

C300 STRUCTURE

C301 GENERAL

The Contractor shall develop the structure for the Detailed Design and construct the vessel in accordance with the contract drawings.

The structural scantling drawings provided as a part of this contract provide basic concept level structure only. The drawings have not been submitted to ABS for review, but have been developed based on the ABS Rules specified in Clause C003. It is the responsibility of the Contractor to develop these drawings to the level of Detailed Design with all necessary plating, bulkhead and framing construction, and weld details and submit them to ABS for approval. The Contractor is expected to re-confirm or correct any concept level structure that does not meet the requirements of ABS.

The Contractor shall submit calculations required to determine all principal hull, deck, bulkhead and superstructure scantlings. The Contractor shall also submit calculations required to determine foundation scantlings, rigging components, and lifting padeyes. Structural calculations shall be submitted with the associated structural drawings. Structural drawings will not be reviewed without accompanying calculations.

C305 HULL STRUCTURE

A. CONTRACT DRAWINGS

#610-B105-01 LINES PLAN
#610-B105-02 FRAMES & OFFSETS
#610-B205-01 OUTBOARD PROFILE
#610-B215-01 GENERAL ARRANGEMENT
#610-B245-01 HOLD & MACHINERY ARRANGEMENT
#610-B301-02 INBOARD PROFILE
#610-B306-01 TRANSVERSE & LONG'L STRUCTURAL SECTIONS
#610-B307-01 DECK & BOTTOM STRUCTURE
#610-B605-01 PROPULSION & SHAFTING ARRANGEMENT

B. DESCRIPTION OF WORK

The hull shall be of all welded steel construction and divided into watertight compartments with transverse bulkheads in accordance with the contract drawings.

All hull steel shall conform to ASTM specification A36-81a for structural steel and be certified by ABS. All welding and weld sizes shall be in accordance with the applicable standards of the American Bureau of Shipping.

The shell and main deck plating shall be constructed of longitudinal strakes of lengths consistent with accepted practice for hulls. All seams shall be connected with full penetration welds.

Hull plating transverse seams may not fall within 6 inches forward or aft of flat-of-bottom tangent line.

Bottom plating forward of Frame #14-1/2 shall be 5/8 inch.

C. PENETRATIONS

When penetrations are made in watertight bulkheads, shell or deck, the plating shall be restored to watertight condition in accordance with the ABS Rules referenced in contract Clause C003. When penetrations are made in oiltight bulkheads or decks, the plating shall be restored to oiltight condition in accordance with the ABS Rules referenced in contract Clause C003.

All such penetrations and deck openings shall be suitably designed and reinforced in accordance with the National Shipbuilding Research Program Publication NSRP 0490 referenced in contract Clause C003.

D. INSERT PLATES

All deck fittings, deckhouse isolation springs, and deck equipment shall be mounted on insert plates welded continuously into the deck with bulkheads, headers or brackets below. Welding on all under deck structure (bulkheads, headers or brackets) shall be double continuous to 6 inches beyond the insert plate. Plates shall have 6-inch radius corners and extend a minimum of 6 inches beyond the item in all directions.

E. OVERBOARD DISCHARGES

All overboard discharge openings through the shell plating above the waterline, shall be located at least 6 inches above the full load waterline.

All discharge penetrations shall not extend beyond the hull plating and shall be of extra strong pipe welded to a circular insert shell plate. Insert plates shall be of equal or greater thickness than the wall of the attached spool piece. No insert plate shall be less than the hull plate in the area of the penetration plus 1/8th inch.

Any pipe penetrating the hull below the full load water line shall be fitted with schedule 80 spool pieces and sea valves. The inboard end of the spool piece shall have a 150 lb pipe flange to bolt to the sea valve. The sea valve shall be located less than 6 inches from the hull opening.

Openings shall be located well clear of draft marks and other hull markings as described in Clause C460.

F. LIFTING PADS

Lifting pads shall be provided throughout the steering gear room, generator room, upper engine room, machinery space/workshop, lower engine room, and shaft alley for the lifting of heavy equipment requiring removal for repair. Pads shall also be provided over soft patches or removal hatches to facilitate equipment removal from below deck.

Structure in way of the lifting pads shall be stiffened to prevent undue deflection under expected loads. The structure shall be designed with a factor of safety not less than 5 based on the ultimate strength of the material. Calculations shall be performed and submitted for lifting pads and support structure intended to lift weights in excess of 500 lbs. Lifting pads rated for 500 lbs or more shall be shown on the structural drawings.

G. FRAMING FOR DOORS, WINDOWS, HATCHES & MANHOLES

All door, window, hatch, and manhole openings shall be provided with headers as necessary to transfer the hull and local structural stresses around the openings. The headers shall be shown on the structural drawings. The requirements for the doors, windows, hatches, and manholes are in accordance with contract Clause C415.

H. SHAFT STUFFING BOX SUMPS

The Contractor shall supply and install sumps beneath each shaft stuffing box. The sumps shall catch the clean water from the stuffing boxes before it reaches the lower engine room bilges where oil contamination could occur. The sumps shall be fabricated of steel as part of the hull structure. Each sump shall be supplied with a pump in accordance with contract Clause C660.

C315 DECKHOUSE

A. CONTRACT DRAWINGS

#610-B205-01 OUTBOARD PROFILE
#610-B215-01 GENERAL ARRANGEMENT
#610-B233-01 PILOTHOUSE DETAILS
#610-B301-02 INBOARD PROFILE

B. DESCRIPTION OF WORK

The Contractor shall design and construct a steel deckhouse meeting the requirements of the ABS River Rules (Part 3, Section 6.17). The contract drawings show the deckhouse including a spring void to contain the vibration isolators used for the floating deckhouse.

If optional line item 0001AD is exercised, the floating deckhouse shall be designed, constructed and installed on the vessel and the maximum air-draft for the vessel shall be 44'-9" with a hull draft of 8'-3". No permanent structure or equipment shall extend beyond this height.

If optional line item 0001AD is not exercised, the floating deckhouse shall not be installed on the vessel, and the deckhouse void shown on the contract drawings shall not be installed. In this case, the maximum air-draft for the vessel shall be 42'-3" with a hull draft of 8'-3" and no permanent structure or equipment shall extend beyond this height.

The deckhouse shall be of all welded steel construction. All steel used for the deckhouse shall conform to ASTM specification A36-81a for structural steel. All welding and weld sizes shall be in accordance with the applicable standards of the American Bureau of Shipping.

C316 STACKS

Stacks shall be fabricated and installed to house the silencers for the main engines, diesel generator sets, and the fire pump diesel engine. See contract Clause C650 for the requirements of the diesel engine exhaust systems.

The stacks shall be designed and constructed of welded steel on hatches. The stacks and hatches shall be removable to allow the removal of the diesel engines, reduction gears, and generator sets for maintenance or replacement. An exhaust fan shall be mounted on the aft side of each stack.

Removable, weathertight bolted hatches, 26 inches long by 24 inches high (oblong shaped) shall be installed in the inboard sides of each main engine stack. The hatches shall be located at the top and the bottom to permit access to the stacks. For the generator stack, a single hatch, of the same size, shall be located towards the bottom in order to provide access to the stack.

C317 MASTS

A. CONTRACT DRAWING

#610-B205-01 OUTBOARD PROFILE

B. DESCRIPTION OF WORK

Masts shall be provided and installed for navigation lights, day markers, warning lights, flags, and radar antennas in a similar manner as that shown on the above contract drawing. All masts provided shall ensure that the maximum air-draft for the vessel of 46 feet measured from the 10% full load waterline is met.

The Contractor shall provide and install a pilothouse top mounted navigation light mast that will hinge forward. When in the hinged down position, the mast shall be located such that all lights may be serviced from the pilothouse top. A mast rest cradle shall be provided to support the mast when it is in the down position.

The flag mast shall incorporate a gaff (spar) and a yardarm. Both the gaff and yardarm shall be fitted with staples, sheaves, and halyards suitable for flying both the United States flag and the USACE flag. Galvanized cleats shall be provided to secure the halyards.

Radar antennas shall be mounted on masts that are designed and fabricated for a wind loading. Any radar antenna exceeding the maximum air-draft requirement shall be capable of being folded down to meet the height restriction.

C320 TANKS

A. CONTRACT DRAWINGS

#610-B130-01 TANK CAPACITY PLAN

B. GENERAL

The towboat contains integral tanks that shall be located in accordance with the contract drawing. The tanks are the ballast tanks, fuel oil tanks, waste oil, oily bilge, sewage holding, gray water holding, lube oil, gear oil, hydraulic oil and potable water tanks.

Capacities shall be as stated in Clause C130. Capacity tables shall be created for the tanks in accordance with Clause C130 of the contract.

Tanks shall be complete with manholes, access ladders, filling connections, sounding tubes, tank level indicators, drains, vents and all necessary connecting piping, gauges and controls as required by the various clauses of this contract.

All tanks shall be of welded steel construction, except the potable water tanks, which shall be of welded stainless steel construction. The tanks shall be designed and constructed to meet the applicable ABS rules.

The Contractor shall install an oil/water stop for any structure passing through an oil-tight or watertight boundary of an integral tank. The oil/water stop is installed to prevent liquid from transiting from the tank via the structural member passing through the tank and the common plate. The size and location of the oil/water stop shall be acceptable to ABS and shown on the structural and tank drawings. See Sketch #320A for typical oil/stop details.

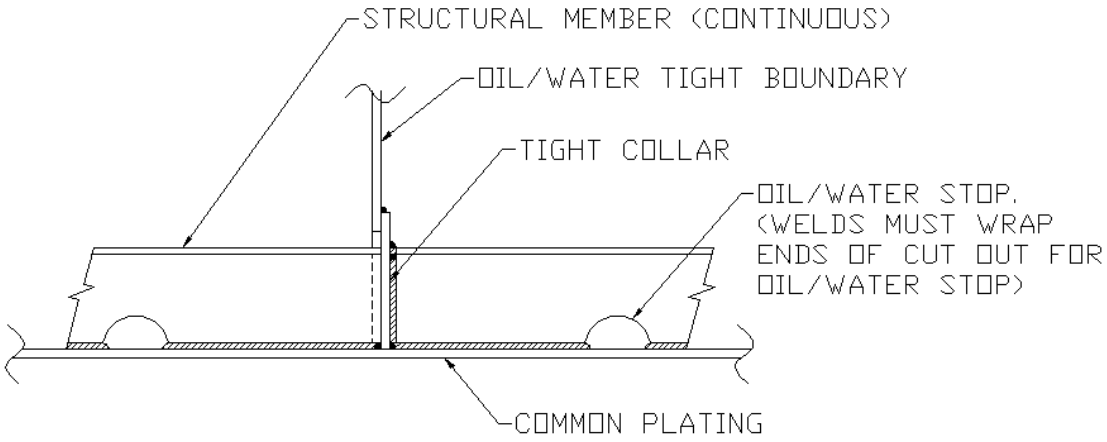

MDC SKETCH #320A, (TYPICAL OIL/WATER STOP DETAIL)

C. DESCRIPTION OF WORK

1. Ballast Tanks

The ballast tanks shall be located as shown on the contract drawing.

The forward ballast tank shall be fitted with a baffle in the fore and aft direction on centerline. The baffle shall be framed with flat bar stiffeners, and shall have 18 inch by 24 inch access openings, limber holes, and vent openings.

Each ballast tank shall be fitted with hatches in accordance with Clause C415 and access ladders in accordance with Clause C427. Vents, sounds, and fills shall be in accordance with Clause C660.

2. Fuel Oil Tanks

The vessel shall be constructed with main fuel oil tanks, a fuel oil service tank, and a fuel oil day tank in the locations shown on the contract drawing. All fuel oil tanks shall be isolated from the side shell and bottom plating.

The fuel oil tanks' plating and framing shall be designed to ABS scantlings for deep tank bulkheads, tank tops, and bottoms.

The fuel oil tanks shall be fitted with hatches in accordance with Clause C415 and access ladders in accordance with Clause C427. Vents, sounds, and fills shall be in accordance with Clause C630.

3. Waste Oil Tank & Oily Bilge Tank

The vessel shall be constructed with a waste oil tank and an oily bilge tank in the locations shown on the contract drawing. The tanks are integral to the main fuel oil tanks and shall be constructed in the same manner as the main fuel oil tanks.

Each tank shall be fitted with hatches in accordance with Clause C415 and access ladders in accordance with Clause C427. Vents, sounds, and fills shall be in accordance with Clause C636 for the waste oil tank and in accordance with Clause C637 for the oily bilge tank.

4. Gray Water Holding Tank & Sewage Holding Tank

The gray water holding tank and the sewage holding tank shall be located as shown on the contract drawing.

Each tank shall be fitted with hatches in accordance with Clause C415 and access ladders in accordance with Clause C427. Vents, sounds, and fills shall be in accordance with Clause C667.

5. Lube Oil Tank, Gear Oil Tank & Hydraulic Oil Tank

The lube oil tank, gear oil tank, and hydraulic oil tank shall be located as shown on the contract drawing. The tanks shall be constructed isolated from the bottom plating.

Each tank shall be fitted with hatches in accordance with Clause C415. Vents, sounds, and fills shall be in accordance with Clause C635.

6. Potable Water Tanks

Welded, 304 stainless steel tanks shall be provided and installed for the potable water. The tank sides and bottom shall be isolated from the side shell and bottom plate of the vessel. All the tank's connections, hatches and fittings shall also be of stainless steel. Structural stiffening interior to the tanks shall be of 304 stainless steel. Exterior stiffeners may be of mild steel if welded in accordance with ABS requirements for stainless steel to mild steel. Insert plates shall be used to tie the top of each stainless steel tank into the main deck.

Each tank shall be fitted with hatches in accordance with Clause C415 and access ladders in accordance with Clause C427. Vents, sounds, and fills shall be in accordance with Clause C665.

C325 SEA CHESTS

A. CONTRACT DRAWING

#610-B245-01 HOLD & MACHINERY ARRANGEMENT

B. DESCRIPTION OF WORK

Four sea chests shall be provided as shown on the contract drawing. The sea chests shall be sized to provide water to the potable water system, the fire system, and the ballast system.

The sea chests shall be fabricated of plate equal to or greater in thickness than the hull plating to which they are attached.

A removable, ½ inch copper-nickel strainer plate shall be bolted onto the hull opening for each sea chest. The strainer plates shall be secured with stainless steel fasteners and suitable insulated for dissimilar materials. Each strainer plate shall have an open area as required by ABS and shall be flush on the outboard side.

Extra strong pipe couplings shall be welded to each sea chest for attachment of piping. Each sea chest shall be equipped with a 2 inch vent. Provisions shall be made to allow closing of the vent in order to allow blowdown of each sea chest. Blowdown connections shall be installed for each sea chest in accordance with contract Clause C690.

C326 TRANSDUCER WELLS

A. REFERENCE DRAWING

#518-D472-01 TRANSDUCER WELL

B. DESCRIPTION OF WORK

Two transducer wells shall be provided and installed for each of the two transducers to be installed for the vessel's depth sounder. The requirements for the depth sounder are in contract Clause C472.

The above reference drawing is provided for guidance in fabricating and installing the transducer wells. The final well pipe diameters shall be based upon the transducer selected for the depth sounder. The access hatches for each well are listed in contract Clause C415.

Provisions shall be made to allow for removal of each transducer from within the deckhouse depending upon their final locations in the vessel.

C330 FOUNDATIONS

A. GENERAL

Suitable foundations shall be provided under all units of equipment, machinery, tanks, deck fittings, winches, and other heavy concentrations of weight to properly mount the item, to distribute the loads to the structure, and to avoid undue stresses and vibrations in the hull.

Foundations shall be fabricated from structural steel shapes and plates. Foundation members shall be lightened and openings provided to permit access to all parts of the foundation for inspection, drainage, and maintenance. Web plates of foundations shall be stiffened at holding-down bolts and other points of load concentration.

Bolting surfaces on foundations shall be made coplanar by the use of machined steel shims or poured-in type chocking material. Bolt holes in foundations shall be templated from the unit.

Foundation top flanges/plates shall be level.

All equipment bolted to foundations shall have mounting bolt holes accurately bored (not burned) and reamed to provide a no-slop fit.

The threaded portion of the bolts shall be clear of the foundation or equipment pads, and heavy flat and lock washers used under all nuts. Elastic stop nuts may be substituted for lock washers.

Where dripping of water or oil can be expected, the top plates of foundations shall be tight and project slightly beyond the edges of bedplates or bases of units to be supported. Flat bar shall be seal-welded around the edges of the top plates to retain any leakage of oil or water and quick disconnect fittings provided for drainage.

B. FASTENERS

Unless otherwise specified by the manufacturer, Grade #8 fasteners shall be used for all bolted connections and equipment and machinery hold-downs. The threaded portion of bolts shall be clear of the foundation or equipment pads, and heavy flat and lock washers used under all nuts. Elastic stop nuts may be substituted for lock washers.

C398 STRUCTURAL SPECIFIC SPECIAL FEATURES - WELDING

A. DECKHOUSE, STACKS & TOWKNEES

For the deckhouse, stacks and towknees, all welding exposed to the weather shall be double continuous to seal off all joints from water and corrosion.

B. HULL FROM FRAME #51 TO THE TRANSOM

From the aft engine room bulkhead (Frame #51) to the transom:

- all structural members and stiffeners shall be attached to the hull bottom with continuous weld one side and 3 on 12 weld on the other side.
- each opening (rat holes, etc) that is adjacent to the bottom plating shall be wrapped a minimum of 3 inches on both sides of the opening.

C. CONNECTIONS OF THE STRUTS

At all locations where the struts connect to the bottom shell, bulkheads, longitudinal and transverse frames, and the main deck plating, the connections of the struts shall be double continuous welded.

THIS PAGE INTENTIONALLY LEFT BLANK

C400 OUTFIT

C405 ANODES

A total of 40 anodes shall be provided and installed in order to protect the vessel's hull. 23.5 pound zinc anodes shall be used, of the ZHC or ZHS type.

The hull anodes shall be distributed with 60% of the anodes located on the stern rake and 40% of the anodes located on the hull forward of the stern rake.

Each keel cooler shall be installed with anodes supplied by the keel cooler manufacturer. See contract Clause C640. Additionally, two additional anodes shall also be provided for each keel cooler and installed in the keel cooler recesses. These anodes shall be 5 pound ZTS type and their locations shall cover the area between the keel cooler manufacturer's anodes.

The sizes, quantities, and locations of the anodes shall be shown on the Dry Docking Plan (Clause C170).

C406 COATING SYSTEM

A. SURFACE PREPARATION

Surface preparation for all structural steel shall be in accordance with Steel Structures Painting Council Standards, SSPC-SP10-85 (Near White Metal Blast) throughout. Profile after blasting shall be 1-1/2 to 2-1/2 mils in depth and jagged. All mill scale, weld spatter, dirt, oil, and grease shall be removed.

Immediately upon completion of surface preparation, all steel shall be coated with the coating system described in the following.

Contractor may limit initial coating to base coat only. In this case, or where pre-construction primer is used prior to application of subsequent coats, all surfaces shall be prepared in accordance with the paint manufacturer's requirements, and any damaged areas repaired prior to application of the remainder of the system. All areas needing repair shall be cleaned to bare metal, spot blasted to restore profile, and re-coated with the base coat.

B. PAINT REQUIREMENTS

Paint shall be delivered in sealed containers with labels to indicate manufacturer, contents, manufacturing date, and any special instructions. Paints and painting materials shall be stored under cover and protected from extreme temperatures.

Paints shall not be used if they have exceeded the closed shelf life or pot life recommended by the manufacturer. Additionally, paints shall not be applied in weather or humidity conditions not recommended by the manufacturer.

C. APPLICATION OF COATINGS

Surface preparation and paint application shall be in strict compliance with the coating manufacturer's recommendations. The Contractor shall take particular care to insure that coating system requirements are met in all areas, especially those difficult to coat, such as flange undersides. All painting on both the interior and exterior surfaces below the main deck shall be accomplished prior to launching of the vessel.

D. COATING SYSTEM

The system is composed of the following coating types:

- Self priming epoxy base coat
- Flake reinforced abrasion resistant epoxy barrier coat
- Fade resistant urethane top coat

A Paint Schedule shall be developed and submitted to the Marine Design Center during the engineering phase of the contract.

E. APPROVED COATINGS

The following coating systems from Ameron, BLP Mobile, International Paint, and Finnaren & Haley have been reviewed and are considered to meet the coating requirements of this clause. The Contractor may select any of these systems at his discretion. However, selection of any other coating system will require the review of the proposed coating manufacturer's data and concurrence of the Marine Design Center prior to any application of the system. Systems may not be "mixed" (i.e. mixing an "a" with a "b", as identified below, is not acceptable). The specific coating designations to be used are as follows:

Surface Tolerant Base Coat

a. Ameron Amercoat 370
b. Amercoat 235 (formerly Devoe Bar Rust 235)
c. BLP Mobile MOPOXY-PLUS
d. International INTERTUF 262 (use INTERGARD 403 for ballast tanks)
e. Finnaren & Haley INDULON 235 (use INDULINE 891 UHS for ballast tanks)

Abrasion Resistant Epoxy Barrier Coat

a. Ameron Amerlock 400GF
b. Amercoat 238 (formerly Devoe Devguard 238)
c. BLP Mobile MOPOXY-PLUS FG
d. International INTERSHIELD 350
e. Finnaren & Haley INDULON 882

Fade Resistant Urethane Top Coat

a. Ameron Amercoat 450 HS
b. Amercoat 369 (formerly Devoe Devthane 369)
c. BLP Mobile MOTHANE HS-900
d. International Paint system requires:
   1) INTERTHANE 990 (for exterior hull surfaces, other than those below the waterline)
   2) INTERGARD 267 (for exterior hull below the waterline)
e. Finnaren & Haley INDURATHANE 890 (above the waterline)

F. NUMBER OF COATS

The number of coats is not specified. The Contractor is required to provide the number of coats necessary to attain the DFT thickness required in the schedule below. Thickness applied per coat may not exceed the manufacturer's recommended maximum thickness. Each coat shall be listed in the Paint Schedule.

The "under coats" of all multiple coat applications may be "contrast tinted" to ensure complete coverage of successive coats.

G. COATING "TYPE" AND DRY FILM THICKNESS (DFT) SCHEDULE

All areas of the vessel shall be coated in accordance with the following schedule:

1. Hull Exterior (below the main deck)

All steel surfaces shall be coated with base coat at 8 mils DFT minimum.

All hull surfaces shall be overcoated (over the base coat) with barrier coat at 12 mils DFT minimum (not including base coat).

All surfaces shall be overcoated (over the barrier coat) with a top coat at 4 mils DFT minimum (not including previous coats).

Lettering and numerals on the hull exterior shall be overcoated (over the barrier coat) with a top coat at 2 mils DFT minimum.

The base coat and the barrier coat shall both be the same color, except the letters and numerals.

The exterior surfaces of the rudders and the interior of each sea chest shall be coated in the same manner as the hull exterior. The interior surfaces of the rudders shall not be coated.

2. Main Deck and Top of the Towknees

All steel surfaces shall be coated with a base coat at 8 mils DFT minimum.

All surfaces shall be overcoated (over the base coat) with barrier coat at 12 mils DFT minimum (not including the base coat).

Non-skid garnet additive shall be added to the barrier coat.

Deck area shall be overcoated (over the barrier coat and non-skid garnet) with top coat at 4 mils DFT minimum.

The top coat and the barrier coat shall both be the same color.

3. Deck Fittings & H-Bitt

All deck fittings and the H-bitt shall receive a base coat at 5 mils minimum and be overcoated (over the base coat) with a barrier coat at 5 mils DFT minimum. A top coat at 2 mils minimum DFT shall overcoat the barrier coat.

4. Compartment Voids & Innerbottoms

All steel surfaces shall be coated with base coat at 8 mils DFT minimum.

5. Exterior Decks (Above the Main Deck)

The following surfaces are considered exterior decks and shall be painted accordingly: the upper deck, the Texas deck, the half deck, the pilothouse deck, and the pilothouse top.

All steel surfaces shall be coated with base coat at 8 mils DFT minimum.

All surfaces shall be overcoated (over the base coat) with barrier coat at 12 mils DFT minimum (not including base coat).

All surfaces shall be overcoated (over the barrier coat) with top coat at 4 mils DFT minimum (not including the previous coats).

Non-skid garnet additive shall be added to the last base coat.

6. Exterior Deckhouse, Masts, Towknees, Stacks & Railings

All steel surfaces shall be coated with base coat at 8 mils DFT minimum.

All steel surfaces shall be overcoated (over the base coat) with top coat at 4 mils DFT minimum (not including base coat).

7. Interiors of Towknees & Spill Containments

All steel surfaces shall be coated with base coat at 8 mils DFT minimum.

8. Forward Stores, Machinery Space, Lower Engine Room & Shaft Alley

All steel surfaces shall be overcoated with base coat at 6 mils DFT minimum.

All surfaces except surfaces to be covered with sheathing shall be overcoated (over the base coat) with a top coat at 2 mils DFT minimum.

9. Deck House Interior

All steel surfaces shall be coated with base coat at 6 mils DFT minimum.

All surfaces except surfaces to be covered with sheathing shall be overcoated (over the base coat) with a top coat at 2 mils DFT minimum.

10. Interior Decks

All steel surfaces, except those receiving a deck covering, shall be coated with base coat at 5 mils DFT minimum.

All steel surfaces shall be overcoated (over the base coat) with a top coat at 2 mils DFT minimum.

11. Ballast Tanks, Gray Water Holding Tank, Sewage Holding Tank & Oily Bilge Tank

The interiors of these tanks shall be overcoated with a base coat at 12 mils DFT minimum.

12. Fuel Oil Tanks, Waste Oil Tank, Lube Oil Tank & Gear Oil Tank

The interior surfaces of these tanks shall be maintained with a coat of mineral oil applied immediately following surface preparation.

13. Hydraulic Oil Tank

The interior surface of the hydraulic oil tank shall be maintained with a coat of hydraulic oil applied immediately following surface preparation.

H. COATING COLOR SCHEDULE

Colors shall conform to Federal Standard No. 595B COLOR BOOK. The book as well as individual paint chips (3" x 5") may be procured from the General Services Administration/Specifications Section as follows:

GSA/FSS/Specification Section
470 L'Enfant Plaza East SW, Suite 8100
Washington, DC 20407

Phone: (202) 619-8925
FAX: (202) 619-8978

The coloring schedule shall be as follows:

AREA	COLOR/FS595 NUMBER
Hull Exterior	Black/17038
Hull Markings	White/27880
Exterior Decks	Lite Gray/36492
Pilothouse Top	Lite Gray/36492
Exterior Deck Coaming	Striping Red/11350
Deck Fittings	Yellow/13591
Deckhouse Exterior	Old Ivory/17855
Deckhouse Markings	Black/17038
Towknees Exterior	Black/17038
Towknees Interior	Lite Gray/36492
Stacks	Black/17038
Hand Rails & Stair Rails	Silver/17178
Masts - Forward	Silver/17178
Mast – Aft	Black/17038
Deckhouse Spring Void	Lite Gray/36492
Compartment Voids	Gray/16473
Innerbottoms	Gray/16473
Forward Stores	Gray/16473
Machinery Space\Workshop	Gray/16473
Lower Engine Room	Gray/16473
Shaft Alley	Gray/16473
Deckhouse Interiors	White/17925
Upper Machinery Space	Gray/16473
Generator Room	Gray/16473
Steering Gear Room	Gray/16473
Interior Decks	Gray/16473
Tanks	Gray/16473
Main Stack Bands	Striping Red/11350
Stack Bands Trim	Silver/17178
Insignia Base Plate	Striping Red/11350
Name Board Letters	Gold/23594
Name Board Background	Blue/25102

On exterior deck areas, both under coat (barrier coat for hull and base coat for deck other than hull) and top coat shall be the same color. All other items must conform to the painting schedule.

On exterior hull areas, both the base coat and the barrier coat shall be the same color.

All top coating shall be thick enough to provide complete opaque color coverage. Thickness increased over the DFT minimums required above shall be provided if required for opaque color coverage.

All items of machinery and equipment shall be painted with the individual manufacturer's standard colors. Painted surfaces damaged in handling and installing the equipment shall be repainted.

All unpainted machinery items having black cast or carbon steel surfaces shall be given a prime coat and finish coat of gray machinery enamel.

I. FINAL INSPECTION OF PAINTING

The Contractor is responsible for delivering the vessel with all painted surfaces in sound condition, and in accordance with this specification.

Prior to launching of the vessel, all interior and exterior painting shall be thoroughly inspected. Notice shall be given to the COR, 7 days in advance of the scheduled launching for this purpose. If there are any defects or damage in the coating of the vessel, the Contractor shall repair the coating to restore the integrity of the paint system, and to meet the requirements of this specification. All damage shall be cleaned to bare metal, spot blasted to restore profile, and re-coated with the entire system schedule.

The vessel shall not be launched until:

- The painting warranty and documentation as required in paragraph J below has been provided to the COR. The warranty and documentation must show compliance with this specification in all areas, and all readings taken.

- The painting has been inspected to the satisfaction of the COR. Contractor must provide documentation prior to MDC inspection.

If outfitting is required after launching, all interior and exterior painting shall be re-inspected prior to Provisional Acceptance, and any damaged areas of the coating shall be repaired by the Contractor as necessary to restore the integrity of the paint system.

Any additional painting required as a result of the Final Inspection shall be done as required to meet this specification at no additional cost to the Government

J. DOCUMENTATION & WARRANTY

1. Documentation

For the vessel, the Contractor shall provide a written signed statement from the paint manufacturer certifying that all coating application and surface preparation are in accordance with the coating system manufacturer's requirements, and that the coating application meets all requirements in this specification.

The Contractor shall provide documentation logs for each coating applied. The logs shall include the following parameters:

a. Coating (per specification) type.

b. Coating manufacturer's requirements for preparation, environmental conditions and application.

c. Date and time of preparation and application.

d. Extent and location of area coated.

e. Surface: preparation, condition at time of coating, temperature at time of coating, dew point at time of coating.

f. DFT measurements for each applied coating type. Measurements shall be taken as follows:

- All flat surfaces, one reading per every 200 square feet, uniformly distributed.
- Undersides of all flanges, one reading per every 50 linear feet of flange, uniformly distributed.
- All free standing structural members, i.e. stanchions, truss diagonals, etc., one reading per 50 linear feet of length each surface, but a minimum of two readings per surface.

Wet film measurements may be taken and converted to DFT as an alternative to direct DFT. In areas where multiple coating types are required, the above DFT requirements are applied to each coating type.

g. Services provided by paint manufacturer's representative (i.e. DFT readings, dew point, etc.), if present during application.

h. Signature of paint manufacturer's representative on site, if present.

2. Warranty

For the vessel, the Contractor shall warranty the coating system for one calendar year, commencing at Final Acceptance. The Contractor shall repair any coating failures during this time period at his cost.

K. SAFETY & HEALTH STANDARDS

The U.S. Occupational Safety and Health Administration Regulations (OSHA) for shipyard employees engaged in surface preparation and coatings application shall be in accordance with the OSHA regulations stated in 29 CFR, subpart C.

These regulations require the Contractor to have access to a "competent person" to test compartment atmosphere quality. The "competent person" shall be in accordance with OSHA regulations, stated in 29 CFR, subpart A, 1915.7.

The regulations also require that frequent testing of the atmosphere shall be made in compartments being coated or preserved (or prepared for coating or preservation) by paints and coatings dissolved in highly volatile, toxic and flammable solvents (29 CFR, subpart C, 1915.35(b)), to ensure the atmosphere is not hazardous.

Each compartment inspection and test shall be logged on OSHA Form 74, with instructions on how to maintain a safe atmosphere in these spaces until the completion of the contract.

On 24-hours notice of any Government inspection, and before any representative of the U.S. Government boards the vessel for inspection, each enclosed or confined space to be inspected shall be labeled "Safe for Workers" in accordance with the OSHA regulations stated in 29 CFR 1915.31-36. A National Fire Protection Association (NFPA) certified Marine Chemist shall issue the initial certificate. The Contractor's Competent Person may certify that all conditions have been maintained and re-certify in accordance with OSHA, 29 CFR 1915. Results of daily inspection and instrument testing shall be recorded on Form OSHA-74.

This means that in all spaces so designated:

- The oxygen content of the atmosphere is at least 19.5 percent and below 22 percent by volume;
- The concentration of flammable vapors is below 10 percent of the lower explosive limit (LEL);
- Any toxic materials in the atmosphere are within permissible concentrations;
- Any residues or materials associated with any work in the space will not produce uncontrolled release of toxic materials under existing atmospheric conditions while maintained as directed.

The Contractor shall notify the Government when this certificate has been issued for each compartment and tank. The vessel will not be inspected and accepted by the Government without a NFPA Marine Chemist certificate for each compartment designated "Safe for Workers."

C410 HULL OUTFIT

A. DRAWINGS

Contract Drawings

#610-B105-01 LINES PLAN
#610-B215-01 GENERAL ARRANGEMENT
#610-B301-02 INBOARD PROFILE

Reference Drawing

#518-D410-02 RUBBER FENDERING

B. TOWKNEES

Two towknees shall be provided and installed at the bow at the locations shown on the above contract drawings. The towknees shall not extend forward of the headlog.

The towknees shall be designed and installed to be integral with the hull structure. Calculations shall be submitted with the structural design drawings for the towknees to verify the towknee design.

Each towknee shall be constructed and structurally reinforced to allow for stowage of equipment inside the towknees. Each towknee shall be open on the inboard and outboard sides. Openings shall have radius corners and a flat bar cap or ring shall be welded to the perimeter of each of the towknee openings.

Each towknee shall be faced with replaceable tow-knee pusher plates (rubber pads vulcanized to steel plates) similar to Johnson Duramax part numbers DB-1409 and DB-1609.

Each towknee shall be fitted with 30 inch wide steps on the inboard side of the towknee. The each side of the steps on each towknee shall be outfitted with a two course railing fabricated from 1-1/4 inch IPS pipe. The top railings shall be 42 inches above the deck and the middle railings shall be 20 inches above the deck.

C. SPLASH BOARDS

Channels shall be welded to the inboard side of each towknee to allow for the use of removeable wooden splash boards between the towknees. The Contractor shall supply three 2 inch by 8 inch nominal size wooden boards to fit between the towknees.

D. CHAFING BAR

A chafing bar shall be installed along the deck edges and the towknee sides for protection from the winch wires. The chafing bar shall be 1 inch stainless steel half round continuously welded to the deck edge from Frame #18, port and starboard, forward to each towknee and continue 36 inches up each towknee's forward outboard edge. The chafing bar shall also be run across the headlog, between each towknee, and 36 inches up each towknee's forward inboard edge.

E. RUB RAILS

The Contractor shall provide and install a rub rail for the vessel. The rub rail shall consist of an 8 inch by 8 inch rectangular "D" shaped rubber fender, similar to a Johnson 900 series, code number DB-908 with 3 inch bore. The top of the rub rail shall be positioned 3 inches below the deck edge.

The installation of the D-rails shall be in accordance with reference drawing #518-D410-02. The D-rails shall be installed starting at Frame #3, extend aft down both sides of the towboat, around the transom corners and extend across the transom. The fendering shall have the transom radius factory molded into the fender.

For the headlog, the Contractor shall provide and install:

1. Hard rubber, weld-on, tow-knee pusher plates between the port and starboard towknees. The bumpers shall be seal welded all around and shall be similar to Johnson Duramax part numbers DB-1409 and DB-1609.

2. On each corner of the bow, a hard rubber, weld-on segmented tow-knee pusher plate similar to Johnson Duramax part number DB-1909. Each corner bumper shall be seal welded all around. The corner bumpers shall extend from the outboard side of each towknee, aft to Frame #3, port and starboard.

F. H-BITT

The Contractor shall provide and install a steel "H"-type towing bitt. The center of the H-bitt shall be located 6 feet aft of the headlog, on centerline. The H-bitt shall be constructed of 10 inch, schedule 160 pipe. The H-bitt shall be approximately 24 inches high (overall above the deck) by 62 inches in overall length. The cross member shall be fabricated from 3 inch cold rolled steel and shall pass through the 10 inch, schedule 160 pipe.

The H-bitt shall extend through the deck to the bottom shell and shall be bracketed into the hull structure.

C415 DOORS, WINDOWS, HATCHES & MANHOLES

A. CONTRACT DRAWINGS

#610-B205-01 OUTBOARD PROFILE
#610-B215-01 GENERAL ARRANGEMENT
#610-B233-01 PILOTHOUSE DETAILS
#610-B245-01 HOLD & MACHINERY ARRANGEMENT

B. GENERAL

Doors, windows, hatches, and manholes shall be located as shown on the above contract drawings.

All door, window, hatch, and manhole openings shall be provided with headers and framing as necessary to transfer the hull and local structural stresses around the openings. The headers shall be shown on the structural drawings. The structural requirements are in contract Section C300.

C. DOORS

1. Exterior Doors

All exterior doors shall be weathertight, stainless steel, solid core, spring-loaded rubber seals, and piano hinged similar to Omega Products' standard exterior door. The doors shall be completely seal welded at the top to prevent rain entering inside the core and corroding the door from the inside out.

A 9 inch sill shall be provided for the upper engine room exterior doors. The remaining main deck level doors not requiring a step up to enter the space shall be installed with a minimum 6 inch sill, however the sill shall be sized in accordance with contract Clause C155.

Doors not located under the roof overhang shall have a flat bar or other device to shield the top of the door from rainwater. All exterior doors shall be provided with automatic closures except the three sets of double doors and the door serving the half space.

The exterior doors are sized and located as follows:

Pilothouse: The port and starboard doors shall be 30 inches wide by 78 inches in height, hinged forward, fitted with a 18 inch x 36 inch safety glass light set 42 inches above the deck. A 2 inch sill shall be provided.

Half Deck- Electrical Plenum: The door to the electronics room shall be 36 inches wide by 42 inches in height, fitted with a 12 inch by 12 inch wired mesh safety glass light set 42 inches above the deck. A 2 inch sill shall be provided.

Texas Deck: The door shall be 36 inches wide by 78 inches in height, hinged forward, fitted with a 18 inch x 36 inch, wired mesh safety glass light. A 2 inch sill shall be provided.

Upper Deck: The starboard door shall be 30 inches wide by 78 inches in height, hinged forward, fitted with 18 inch by 18 inch tinted, wired mesh safety glass light. A 2 inch sill shall be provided.

The door on the aft end of the house for the upper deck shall be 36 inches wide by 78 inches in height, hinged to open out, fitted with a 18 inch x 36 inch wired mesh safety glass light set 42 inches above the deck. A 2 inch sill shall be provided.

Main Deck: The forward house door shall be a double door, with over width of 60 inches by a height of 78 inches, hinged to open inward. Each door shall be fitted with an 18 inch by 18 inch wired mesh safety glass light. A 2 inch sill shall be provided.

The door leading into the galley shall be 36 inches wide by 78 inches in height, hinged to open inward, fitted with a 12 inch by 24 inch wired mesh safety glass light. A 2 inch sill shall be provided.

A set of double doors shall be installed on the port and starboard side to provide access to the upper engine room. Each double door shall have an overall width of 60 inches with a height of 80 inches and be hinged to open outward. Each door shall be fitted with an 18 inch by 18 inch wired mesh safety glass light. A 9 inch sill shall be provided for each door.

The starboard door leading to the engineer's control room shall be 30 inches wide by 78 inches in height, hinged to open forward, fitted with a 18 inch by 36 inch tinted, wired mesh safety glass light. A 6 inch sill shall be provided.

The port and starboard doors leading to the steering gear room shall be 36 inches wide by 78 inches in height, hinged to open forward, fitted with a 12 inch by 12 inch wired safety glass light. A 6 inch sill shall be provided for each door.

2. Watertight Doors

USCG standard 28 inch x 60 inch clear opening watertight doors with 6 inch radius corners shall be installed in the forward and aft ends of the lower engine room. The doors shall be fabricated from steel and shall meet the ABS requirements to preserve the tightness of the adjacent bulkhead.

Each watertight door supplied shall be quick acting, 6 dog, sliding dog type. Each door shall be fitted with a door alarm as required by contract Clause C692.

3. Interior Doors

The interior doors are sized as follows:

Staterooms: The doors for each stateroom shall be 30 inches wide by 78 inches in height, hinged to open as shown on the contract drawings. A 2 inch sill shall be provided for each door. Each stateroom door shall be double panel, hollow steel (steel to be a minimum of 16 gauge) intended for marine use.

Head Spaces: The doors for each head or toilet space shall be 24 inches wide by 78 inches in height, hinged to open as shown on the contract drawings. A 2 inch sill shall be provided for each door. Each head space door shall be a hollow core steel door (steel to be a minimum of 16 gauge) with an inserted louver.

Stairwell: The doors for the stairwell shall be 30 inches wide by 80 inches in height, hinged to open as shown on the contract drawings. Each door shall be fire rated and fumetight, fitted with a 12 inch by 12 inch fire window. The doors shall all be provided with automatic closures and 2 inch sills.

Main Deck Level – Other Doors:

Mess Area: The door leading from the mess area forward (Frame #17) shall be 36 inches wide by 80 inches in height, hinged to open as shown on the contract drawings. The door shall be fumetight, fitted with a 12 inch by 12 inch wired safety glass light. The door shall be provided with an automatic closure and 2 inch sill. The door shall be double panel, hollow steel (steel to be a minimum of 16 gauge) intended for marine use.

Pantry: The pantry door shall be 30 inches wide by 78 inches in height, hinged to swing open in both directions. The door shall be fitted with a 12 inch by 12 inch wired safety glass light. A 2 inch sill shall be provided. The door shall be double panel, hollow steel (steel to be a minimum of 16 gauge) intended for marine use.

Sound Lock: The doors for the sound lock (at Frame #34 and Frame #36) shall be 36 inches wide by 80 inches in height, hinged to open as shown on the contract drawings. Each door shall be fire rated and fumetight, fitted with a 12 inch by 12 inch fire window. The doors shall all be provided with automatic closures and 2 inch sills.

Generator Room: A set of double doors shall be installed at Frame #50 to provide access to the generator room. The double door shall have an overall width of 60 inches with a height of 80 inches and be hinged to open as shown on the contract drawings. The double doors shall be fire rated and each door shall be fitted with a 12 inch by 12 inch fire window. A 2 inch sill shall be provided for the double door.

At the aft end of the generator room a 30 inch wide by 78 inch high door shall be provided and installed. The door shall be hinged to open as shown on the contract drawings. The door shall be fire rated and fumetight, fitted with a 12 inch by 12 inch fire window. The door shall be provided with an automatic closure and 2 inch sill.

Engineer's Spaces: The doors located at Frame #50 and Frame #57 shall be 32 inches wide by 78 inches high, hinged to open as shown on the contract drawings. The doors shall be fire rated and fume tight, each fitted with a 12 inch by 12 inch fire window. Each door shall be provided with an automatic closure and 2 inch sill.

The door leading into the engineer's control room shall be 30 inches wide and 78 inches in height, hinged to open as shown on the contract drawings. The door shall be fume tight and fitted with a 12 inch by 12 inch wired safety glass. A 2 inch sill shall be provided.

Upper Deck – Other Doors:

Crew's Lounge & Ship's Office: The doors serving these spaces shall be 30 inches wide and 78 inches in height, hinged to open as shown on the contract drawings. Each door shall be fitted with a 12 inch by 12 inch wired mesh safety glass. The doors shall all be provided with automatic closures and 2 inch sills. The doors shall be double panel, hollow steel (steel to be a minimum of 16 gauge) intended for marine use.

Half Deck - Electrical Plenum: The door leading from the stairwell to the electronics room shall be 36 inches wide by 42 inches in height, hinged to open into the space. The door shall be fire rated and fume tight, fitted with a 12 inch by 12 inch fire window. A 2 inch sill shall be provided.

4. Door Hardware

Frames shall be provided for each door appropriate for the service intended. Doors shall be hung a minimum of three hinges (except as noted), and a door stop. Door hardware shall be stainless steel.

All doors, excluding the watertight doors, shall be provided with lever type handles inside and outside, with actions downward.

No locks shall be provided for the stairwell doors, interior Upper deck lounge, generator room doors, mess area forward door (Frame #17), and toilet\head space doors. For privacy, the toilet\head space doors shall have provisions for latching from the inside of the toilet space.

All remaining doors, shall be furnished with suitable locks, with interchangeable cores, designed as a system and procured from a single manufacturer. The lock system shall be designed on a "grand master" and "master" basis similar to that of the Best Lock Corporation. The grand master shall open all locks on the vessel.

Master keys shall be developed as follows:

Machinery spaces and electrical plenum – all doors associated with the upper and lower engine room, engineers' spaces, steering gear room, and electronics room.

Galley – all doors associated with the galley and pantry.

Staterooms – all doors associated with the staterooms.

Two keys shall be furnished for each lock and 10 blank keys of each type fitted. All keys shall be tagged with brass tags and numbered. A wall mounted key cabinet shall be located in the ship's office.

D. WINDOWS

All windows shall be ¼ inch thick safety glass. All windows shall be of the same manufacturer to provide consistent styling, function and ease of repair.

The glass shall be set in neoprene glazing with extruded aluminum frames, which are clipped or bolted into the deckhouse structure in accordance with the manufacturer's recommendations.

Aluminum framed screens with stainless steel mesh shall be provided for all opening windows. Screens shall be fitted into a track incorporated into the window frame.

1. Pilothouse

The pilothouse shall have windows all around for maximum visibility. The windows shall be sized and located as shown on contract drawings #610-B215-01 and #610-B233-01.

The windows forward of the exterior doors, port and starboard, and extending around the forward end of the house shall be sloped as shown on the contract drawing. The windows on the aft end of the house shall be raked aft as shown on the contract drawing. All of the pilothouse windows shall be fixed, of clear glass, and supplied with radius corners. Mullions between pilothouse windows shall be minimum width possible to reduce visibility obstruction.

Independently operated windshield wipers shall be supplied and installed for the pilothouse windows as follows:

Forward, centerline, and port and starboard corner windows shall be fitted with a single blade, straight-line window wiper similar to a WYNN, Type "C". The wipers shall be sized to cover as much window area as possible without the blades touching the mullions. A two speed AC motor (radio suppressed) shall be supplied for each wiper. Each wiper unit shall come with a park sensor.

The forward, port and starboard windows and the aft centerline window shall each be fitted with a single blade pendulum type wiper similar to a WYNN, type 1602S, standard duty wiper. Each wiper shall be sized to cover as much window area as possible without the blades touching the mullions. A single speed AC motor (radio suppressed) shall be supplied for each wiper.

An electric fan for defrosting the windows shall be mounted at the five forward-most windows and at the aft center window. The fans shall be adjustable, low speed, with steel fan guards.

The wiper and fan controls shall be mounted on or in the console within comfortable reach of the operator. The position of the controls shall be determined during the construction phase.

The pilothouse windows shall all have see-through dark smoke colored shades, mounted on clutch springless rollers.

2. Deckhouse – Forward Frame #36

For the deckhouse windows, forward of Frame #36, the windows shall be supplied with medium tint. The windows shall be sized and located as shown on contract drawings #610-B205-01 and #610-B215-01.

The galley window, the mess window, and the eight large, forward facing windows (on the Upper deck and Texas deck) shall be horizontal and fixed. The remaining windows shall be of the horizontal sliding type, with the aft glass sliding forward with insect screens. All windows shall be supplied with radius corners.

Mini-blinds shall be provided and installed on all deckhouse windows. General sizing for all stateroom windows shall be 30 inches wide by 24 inches high.

Windows in the toilet\head spaces shall be smaller and set higher on the bulkhead for privacy. All windows in the toilet\head spaces shall be supplied with frosted glass in lieu of mini-blinds.

3. Deckhouse – Aft Frame #36

The windows shall be sized and located as shown on contract drawings #610-B205-01 and #610-B215-01. For the deckhouse windows, aft of Frame #36, the windows shall be supplied with clear glass. The windows shall be of the horizontal sliding type, with the aft glass sliding forward. All windows shall be supplied with radius corners.

The window between the engineer's control room and the upper machinery space shall be a fixed, horizontal, fire rated wire mesh window. The window between the Engineer's Control Room and passageway shall be a horizontal, fixed window with ¼ inch thick, wire mesh safety glass. The windows shall be supplied with radius corners.

E. WATERTIGHT HATCH

A watertight hatch shall be provided and installed on the forward main deck in order to provide access to the forward stores. The hatch provided shall have a clear opening of 84 inches by 36 inches with hinges installed along the 84 inch side of the hatch. The hatch shall be spring balanced and fabricated from aluminum. The coaming height for the hatch shall be a minimum of 6 inches above the main deck.

F. EMERGENCY ESCAPE SCUTTLES

Two emergency, flush, steel hinged, ABS grade watertight scuttles with a 20-inch clear opening (similar to CEN-TEX Marine drawing #401) shall be fitted in the main deck outboard of the deckhouse in way of the machinery space and shaft alley. Each emergency hatch shall have a stainless steel "T" type handle and round bar shaft with an escape handle attached to the underside of the hatch.

G. TANK & VOID MANHOLES & HATCHES

1. Ballast Tanks, Cooler Voids, Voids #1 & Voids #2

Access to the ballast tanks, port and starboard cooler voids, aft port and starboard voids #1, and aft port and starboard voids #2 shall be through round, watertight flush deck hatches similar to Freeman Marine model 22AMSR. The hatches shall be located as shown on contract drawing #610-B215-01.

2. Sea Chests, Gray Water & Sewage Holding Tank Hatches

Access to the four sea chests, the gray water holding tank, and the sewage holding tank shall be through round, flush watertight bolted plate hatches similar to CEN-TEX drawing #310 with clear opening of 20 inches. The hatches shall be located as shown on contract drawing #610-B215-01.

3. Clean Out Hatches

Raised, bolted plate, oil tight, clean out hatches similar to NABRICO, stock #DF-154-18 with an opening of 18 inches shall be supplied and installed for the Lube Oil Tank, Gear Oil Tank, Hydraulic Oil Tank, Waste Oil Tank, and the Oily Bilge Tank. The hatches shall be located in a side of the respective tank where there is room for access to the tank interior. Each hatch shall be supplied with gaskets suitable for the respective oil service of the tank.

The main fuel oil tanks, the fuel oil service tank, and the fuel oil day tank shall each be accessed by oil tight, raised bolted plate manholes similar to CEN-TEX, drawing #302. These oblong hatches shall have a clear opening of 15 by 23 inches. Each hatch shall be supplied with gaskets suitable for fuel oil service. The hatches shall be located towards the top of a tank and shall be located in a side of the respective tank where there is room for access to the tank interior.

4. Innerbottom Access Hatches

Raised, bolted plate, water tight manholes similar to CEN-TEX drawing #302 shall be installed for access to the innerbottoms. Two hatches shall be installed on the forward bulkhead at Frame #13 and two hatches shall be installed on the aft bulkhead at Frame #22. The hatches supplied shall have a clear opening of 18 inches by 24 inches and shall be supplied with gaskets suitable for water.

5. Potable Water Tank Hatches

Each potable water tank shall be accessed through a raised, bolted plate, watertight clean out hatch. The hatches shall be fabricated from the same material as the tanks and shall be square, with 18 inch by 18 inch clear opening. The hatches to be located near the top of the tanks and in a side of the tank where there is room for access to the tank interior.

On the opposite, transverse end of each potable water tank, a raised, bolted plate, watertight clean out hatch, 12 inches by 12 inches clear opening shall be installed to assist in cleaning and gas freeing each potable water tank. The hatches shall be fabricated from the same material as the tanks.

All hatches for the potable water tanks shall be outfitted with gaskets meeting the requirements of USPHS\FDA for potable water service.

H. TRANSDUCER WELL

Bolted hatches shall be supplied for the transducer wells. Each hatch shall be an 8 inch bolt down access hatch similar to a BAYWOOD model B-189.

C420 DECK FITTINGS

A. CONTRACT DRAWINGS

#610-B215-01 GENERAL ARRANGEMENT

B. KEVELS

The Contractor shall provide and install twelve 42 inch cast steel kevels at the locations shown on the contract drawing. The kevels shall be of the open type with smooth formed openings and manufactured of cast steel. Kevels with plate edges in openings are not acceptable. Kevels shall be continuously welded to deck insert plates that are at least 1/8 inch thicker than the surrounding deck plate.

C. ROLLER BUTTONS

Six 15 inch roller buttons similar to BLACKBURN Marine RB-100 shall be provided and installed on the deck with three port and three starboard. The chocks shall be arranged to support the function of the barge winches and capstan and shall be generally arranged as shown on the contract drawing. The final positions shall be determined during the Engineering phase.

D. BUTTON CHOCKS

Eight 10 inch button chocks similar to NABRICO DF-185 shall be provided and installed as shown on the contract drawing. The chocks shall be continuously welded to deck insert plates that are at least 1/8 inch thicker than the surrounding deck plate.

C425 WALKWAYS, RAILINGS, GRATINGS & FLOOR PLATES

A. CONTRACT DRAWINGS

#610-B205-01 OUTBOARD PROFILE
#610-B215-01 GENERAL ARRANGEMENT
#610-B233-01 PILOTHOUSE ARRANGEMENT
#610-B245-01 HOLD & MACHINERY ARRANGEMENT
#610-B301-02 INBOARD PROFILE
#610-B306-01 TRANSVERSE & LONG'L STRUCTURAL

B. WALKWAYS

Walkways shall be provided and installed as shown on the above contract drawings. The walkway at the forward side and the forward, outboard, end of the pilothouse deck shall be constructed of an open type grating as described below.

Walkways above the main deck shall be constructed of welded steel. The outer edge of each walkway shall have a flat bar coaming extending 2 inches above the walkway plate to trap rain water. A similar coaming shall be installed at all ladder openings and all other openings in the walkway.

C. HANDRAILS

The Contractor shall provide and install handrails as follows:

1. Main Deck Level – Deck Edge

The Contractor shall install a suspended swing-away chain rail outboard of the deckhouse on the main deck, running from Frame #13 aft to Frame #69, on both the port and starboard sides.

Along the deck house side, the chain rail system shall consist of the following:

- ¼ inch stainless steel vertical chains, located on centers, such that the maximum deflection of the horizontal chains between the vertical chains shall be no more 3 inches.

- The vertical chains shall be attached at the top to a swing arm, and at the deck to a tension spring and quick release hook. Each hook shall clip to a padeye welded to the deck. The verticals shall be positioned in order to not interfere with the deck fittings.

- The horizontal chain railings shall pass through rings on the verticals and shall be fastened at each end with tension springs, hooked to padeyes located on removable stanchions.

- Horizontal chains shall be set up for a three course or tier system, with chains located at 9 inches, 24 inches and 42 inches above the deck.

- The horizontal chain shall be 1/4 inch proof coil chain, stainless steel.

Forward of the deckhouse, a portable safety chain system shall be installed from the swing-away chain rail system forward of the deckhouse, port and starboard, to each towing knee. The system shall consist of:

- Removable stanchions, provided and installed to support the chains forward of Frame #13 to where the chains attach to the outboard side of each towknee.

- The stanchions shall be located on centers, such that the maximum deflection of the horizontal chains between the stanchions shall be no more 3 inches.

- The horizontal chains shall be set up for a three course or tier system, with chains located at 9 inches, 24 inches and 42 inches above the deck.

- The horizontal chain shall be 1/4 inch proof coil chain, stainless steel.

On the aft end of the deckhouse a portable safety chain system shall be installed from the swing-away chain rail system starting at Frame #69, starboard, and extending aft across the transom, then forward to Frame #69, port. This system shall have the same features as described above with removable stanchions provided and installed to support the chains starting at Frame #69 starboard extending aft across the transom to the stanchion located at Frame #69 port.

The removable stanchions shall be fabricated from 1-1/2 inch IPS pipe. The stanchions shall be installed in deck sockets built of 2 inch schedule 80 pipe, welded flush with the deck plate and extending down to weld flush with the side shell plating at a height 12 inches above the design waterline with a 45 degree elbow. The pipe stanchions shall be fitted with a collar of 2 inch schedule 80 pipe welded to the stanchion such that the bottom of the collar is 4 inches above the bottom of the stanchion to mate the deck sockets.

Each stanchion shall be fitted with welded staples. For the chains between the staples, each end of the chain shall be fitted with snap hooks to engage the staples on the stanchions.

2. Main Deck Level – Exterior Deckhouse

The Contractor shall provide and install 1-1/4 inch IPS pipe grab rails around the entire deckhouse on the main deck level. The grab rails shall be steel pipe supported every 6 feet and positioned approximately 42 inches above the deck. The clear space between the grab rail and the bulkhead shall be 3 inches.

3. Main Deck Level - Interior

The Contractor shall provide and install a two tier pipe railing around the openings in the main deck between the upper engine room and the lower engine room.

The railings and stanchions shall be 1-1/4 inch IPS pipe. One railing shall be 42 inches above the deck and second railing shall be 20 inches above the deck. The stanchions shall be located at frames and spaced no more than 6 feet apart. The railings around the engine cutouts shall be removable to allow for ease of removal of the main engines.

4. Upper Deck, Texas Deck, Half Deck and Pilothouse Deck

The Contractor shall provide and install a three tier, permanent welded pipe railing around the perimeter each deck. On the Upper Deck and the Texas Deck, the pipe railings shall connect with the bulwark provided for each respective deck as shown on contract drawings #610-B205-01 and #610-B311-01.

The railings and stanchions shall be 1-1/2 inch IPS pipe. One railing shall be 42 inches above the deck, the second railing shall be 24 inches above the deck, and the third railing shall be located 9 inches above the deck. The stanchions shall be located at frames (over deck support structure) and spaced no more than 6 feet apart. A length of 3/16 inch stainless steel chain with end snap hooks shall be provided and installed at each tier in the way of the openings.

On the pilothouse deck level, all stanchions shall be in line with the window mullions.

5. Pilothouse Top

The Contractor shall provide and install a 1-1/2 inch IPS pipe single grab rail all around the perimeter of the pilothouse top. The rails shall be at a height of 18 inches above the housetop. The stanchions shall be located on frames and be spaced no more than 4 feet apart.

D. GRATINGS

Grating supplied and installed shall be of the hot dip galvanized bar type, non-skid grating of about 3/16 inch x 1 inch flat bars on 1 inch centers designed to support a load of 100 lbs. per square foot. Deflection under fully loaded conditions shall not exceed .01 times the span.

Gratings shall be accurately fabricated and free from paint, warp, twist, or other defects affecting their appearance or serviceability. Grating shall be cut and banded for fitting around piping, ducting, etc., in such a manner that no sacrifice of strength results.

Grating shall be installed in accordance with the manufacturer's recommendations. Clip fasteners shall be provided by the manufacturer of the grating and shall be attached to the support structure with stainless steel hex head bolts with nylock nuts.

Grating sections shall be located:

- Over the main deck openings above the main engines. This grating shall readily removable.

- On the pilothouse deck in front of and on the port and starboard sides of the pilothouse.

The bearing bars for the grating forward of the pilothouse shall run fore and aft.

The bearing bars of the pilothouse deck grating on the sides, port and starboard, shall run transversely to provide the minimum vision obstruction.

E. FLOOR PLATES

Floor plates shall be provided in the forward stores, machinery space, lower engine room and shaft alley. The floor plates shall be positioned above the longitudinals and transverses and supported through a framework of angles and stanchions to the hull structure.

Floor plates shall be 1/4 inch aluminum alloy diamond tread. These plates shall be installed in sections for easy removal and shall be secured with countersunk flat head stainless steel screws, minimum ¼ inch diameter. Sections shall be sized so that a single person may lift out each panel. The supports shall not extend above the surface of the abutting plates. The plates shall be required to be flat and free from warp, twist, and other defects affecting their appearance and serviceability.

The floor plates shall be designed to support minimum static loads of 100 lbs. per square foot without excessive deflections, generally, and shall be locally reinforced, as necessary, where greater loadings are contemplated in the removal or disassembly of machinery for overhaul.

Hinged sections of floor plate shall be provided in way of all valves, strainers, and under floor equipment requiring operation, inspection or maintenance. Flush type lifting rings or finger holes (ground smooth) shall be provided in the hinged plate sections.

Care shall be taken to isolate dissimilar metals.

C427 VERTICAL & INCLINED LADDERS

A. CONTRACT DRAWINGS

#610-B205-01 OUTBOARD PROFILE
#610-B215-01 GENERAL ARRANGEMENT
#610-B233-01 PILOTHOUSE ARRANGEMENT
#610-B301-02 INBOARD PROFILE

B. INCLINED LADDERS

The Contractor shall provide and install inclined ladders for the vessel in the locations shown on the above contract drawings. The inclined ladder widths shall be as measured from the contract drawings, except the ladder leading to the forward stores from the main deck level shall be 42 inches wide. Raiser heights shall be between 7 inches and 8-1/2 inches in order to provide equal height for all steps on any one inclined ladder. The angle of any inclined ladder shall not exceed 50 degrees from the horizontal.

The ladder from the pilothouse deck to the top of the pilothouse shall be a welded steel spiral ladder of 48 inches in diameter.

All inclined ladders shall be constructed of steel, except for the ladder leading to the lower engine room and the ladder leading to the forward stores that shall be fabricated from non-skid open type grating treads with nosing installed. The ladders leading to the lower engine room and the forward stores shall have dirt shields installed behind them, as well as these ladders being removable to assist in the maintenance and replacement of equipment. Fasteners shall be stainless steel.

Inclined ladders with bulkheads on one or both sides shall have a handrail on one side only. Two course handrails shall be installed on both sides of all freestanding ladders as well as all fixed stairways leading into the main deckhouse. The top rail shall be 34 inches measured vertically from the tread toe.

Non-skid tread and safety nosing, similar to WOOSTER, shall be installed on all inclined ladders, except those fabricated from grating.

C. VERTICAL LADDERS

Vertical ladders shall be installed at the locations shown on the contract drawings in order to provide access to the emergency escape hatches; cooler voids; the port and starboard, aft voids #1 and #2; the ballast tanks; the gray water holding tank; the sewage holding tank; the main fuel oil tanks; the fuel oil service tank, the fuel oil day tank; the waste oil tank; the oily bilge tank; and potable water tanks.

All vertical ladders shall be removable, except for individual rungs welded to the structure.

With the exception of any 304 stainless steel ladders in the potable water tanks, all vertical ladders shall be carbon steel construction of 2-1/2 inch x 3/8 inch flat bar stringers with (minimum) 5/8 inch square rungs set on edge and welded to the stringers on 12 inch centers. All rungs shall have at least 18 inch wide effective rung width and 7 inch toe room. Ladders more than 8 feet long shall have intermediate supports.

Where ladders are required on bulkheads, they may be separate rungs of 3/4 inch square bar welded to the structure. Where not extended from side to side of adjacent structure, these rungs shall be stirrup shaped to prevent slipping endwise. Rungs shall be a minimum of 12 inches wide with 7 inches toe room.

C430 DECK COVERINGS

The Contractor shall supply and install deck coverings throughout the interior and exterior of the vessel.

A. EXTERIOR DECKS

The exterior decks consist of the main deck, top of the towknees, the upper deck, the Texas deck, the half deck, the pilothouse deck, and the pilothouse top. These weather decks shall receive a coating system in accordance with contract Clause C406. A non-skid surface shall be applied to all of these decks.

B. INTERIOR DECKS

All steel interior decks shall be prepared as recommended by the deck covering manufacturer prior to the floor covering installation. Floor covering and accessories, including any necessary sealers and finish coating, shall be installed in accordance with the manufacturer's recommendations and instructions.

For all interior spaces of the main deckhouse forward of Frame #36, that receive a floor covering, a sanitary cove base shall be installed. The cove base shall be of similar material and color as the adjacent floor covering, and shall be a minimum of 4 inches high. The cove base shall be worked around all bulkheads and equipment. The cove base shall be sealed at the top and bottom edge with a long lasting silicone seal. Where the cove base will not fit below doorways, the coving shall be trimmed to suit or sealed by other means on an instance by instance basis as determined on site by the COR.

Care shall be taken to account for the deck drains when installing the floor coverings in the toilet spaces and the laundry The floor covering installed in these areas shall be sloped down to the drains.

During the construction phase, the COR shall select the floor covering colors, maximum of five different colors.

1. Work Spaces

The electronics room, (half deck level), the forward work area, the main deck level walkway (between Frame #36 and Frame #37), the upper engine room, the generator room, the engineer's control room, the engineer's workshop, and the steering gear room are all considered work spaces. The decks in these spaces shall all receive a coating system in accordance with contract Clause C406.

2. Pilothouse

The pilothouse floor shall be an overlay similar to 1/8 inch Dex-O-Tex Magnabond, 1 inch thick Insulite insulation, and 3/8 inch resilient rubber marine flooring similar to Tuflex. Transition between tiles and other deck coverings shall include pieces specifically designed for this purpose (such as Tuflex Reducer Strip).

3. Stairwell Landings

The stairwell landings floor shall be an overlay similar to 1/8 inch Dex-O-Tex Magnabond, 1 inch thick Insulite insulation, and 1/8 inch thick raised radial rubber tile similar to Flexco (RBT).

4. Wet Spaces (Toilets & Laundry Room)

All wet spaces on the Texas deck and the upper deck shall have floors with an overlay similar to 1/8 inch Dex-O-Tex Magnabond, 1 inch thick Insulite insulation, and shall be covered with a poured neoprene latex mastic similar to Neotex-28 type Dex-O-Tex.

All wet spaces on the main deck level shall have floors with an overlay similar to 1/8 inch Dex-O-Tex Magnabond, 1-1/4 inch thick Insulite insulation, and shall be covered with a poured neoprene latex mastic similar to Neotex-28 type Dex-O-Tex.

5. Texas Deck & Upper Deck Level

All other spaces on the Texas deck and the upper deck shall have floors with an overlay similar to 1/8 inch Dex-O-Tex Magnabond, 1 inch thick Insulite insulation, and 1/8 inch thick raised radial rubber tile similar to Flexco (RBT).

6. Main Deck Level

All other spaces on the main deck level, except the forward work area, shall have floors with an overlay similar to 1/8 inch Dex-O-Tex Magnabond, 1-1/4 inch thick Insulite insulation, and 1/8 inch thick raised radial rubber tile similar to Flexco (RBT).

C435 JOINER WORK

Joiner work is required for the built-in pilothouse settee, vanity, and water closet cover required by contract Clause C437.

All items mounted against the bulkhead panels shall be fastened through the panels directly to vessel structure.

There shall be no wood behind joinery. If used, furring strips shall be metal.

All cabinetry shall be provided and installed complete with appropriate drawer slides, hinges and handles.

The color scheme of joiner work shall be selected by the COR from available color options, four colors maximum.

C436 INSULATION & SHEATHING

A. TREATED AREAS

1. Spaces Located Above the Main Deck Level

Insulation and sheathing shall be provided and installed for the following spaces:

- All exterior deckhouse bulkheads and overheads
- The overheads of the forward work area, the upper engine room, the engineer's control room and workshop, the generator room, the steering gear room, and the electronics room.
- The interior bulkheads of the laundry and forward work area.
- The interior of the stacks.
- The interior bulkheads and overheads of the supply fan plenums located in the upper engine room.
- The interior bulkheads of the engineer's control room and engineer's workshop.
- The interior bulkheads of the generator room.

2. Spaces Located Below the Main Deck Level

Insulation and sheathing shall be provided and installed for the following spaces:

- All four bulkheads and the overhead of the forward stores.
- All four bulkheads and the overhead of the machinery space.
- The port and starboard bulkheads of the lower engine room.
- The aft bulkhead, port and starboard bulkhead, and the overhead of the shaft alley.

The insulation and sheathing in the spaces located below the main deck shall be installed to 12 inches above the deck plating.

B. INSULATION REQUIREMENTS

Insulation, sheathing, and the mounting system used shall be suitable for marine workboat service, anticipating high levels of dampness and vibration, and temperature extremes. Insulation shall be in accordance with USCG regulations.

Installation shall be in accordance with the manufacturers' recommendations for the intended service. However, as a minimum, the mounting studs shall be welded to bulkhead/overhead structure. Adhesive mounting is not acceptable.

The insulation system shall be fiberglass similar to Claremont's Claretex N-3A Hullboard and sufficient to meet the acoustic criteria in Clause C180 and the thermal criteria in Clause C685. In all cases, the insulation thickness shall not be less than 4 inches.

Insulation in the forward stores, machinery space, lower engine room, shaft alley, forward work area, upper engine room, supply fan plenums, generator room, engineer's workshop, steering gear room, stacks, and electronics room shall be specially faced on the inboard sides with a fiberglass scrim reinforced Mylar damage resistant material similar to Claremont's "Tuff-Skin 1613". Additionally, the layers of insulation shall be separated by a sound absorption material similar to Claremont Marine Coustifab 150G-NL.

All insulation shall be kerfed to wrap around stiffeners larger than 4 inches in depth, with additional filler under flanges. The system shall be applied to stack soft hatches such that the soft patches may be removed with the system integral with the hatch.

C. SHEATHING REQUIREMENTS

1. General Installation Requirements

Sheathing shall be provided in all areas with insulation, except as noted within this clause.

Since the insulation treatment wraps around stiffeners, furring strips shall be required to provide a firm fair base for the sheathing. The furring strips shall be mounted to stiffeners with stand offs to avoid crushing the insulation and acoustical treatments. Sufficient furring shall be provided to provide a fair surface for the sheathing. All furring shall be metal. No wood is permitted behind sheathing.

Framing, furring strip, and fastener spacing shall prevent drumming and vibration of sheathing. The sheathing shall be fastened to the furring strips or the deckhouse framing by pop rivets, or self-tapping stainless steel sheet metal screws. The fastening system may be assisted by the use of adhesive similar to 3M Company's 42-NF Plus NV Fastbond between the metal furring and the sheathing. However, the adhesive shall not be a substitute for effective securing of the sheathing with fasteners. All fasteners not in the machinery spaces shall be covered with decorative caps.

Access panels shall be provided as required for access to wiring or piping behind the sheathing. Access panels shall present a pleasing appearance and be consistent with the surrounding sheathing. Edges shall be ground smooth or covered with vinyl trim.

All items mounted against the bulkhead panels shall be fastened through the panels directly to bulkhead support structure.

2. Installation Requirements for Machinery, Storage & Work Spaces

14 gage perforated aluminum sheets, unpainted, with a minimum of 30% open area shall be installed in the following spaces:

- Forward stores (bulkheads and overhead)
- Machinery space (bulkheads and overhead)
- Lower engine room (bulkheads and overhead)
- Shaft alley (bulkheads and overhead)
- Forward work area (bulkheads and overhead)
- Upper engine room (bulkheads and overhead)
- Supply fan plenums (bulkheads and overhead)
- Interior of stacks
- Engineer's workshop (bulkheads and overhead)
- Generator room (bulkheads and overhead)
- Steering gear room (bulkhead and overhead)
- Electronics room (bulkhead and overhead)

3. Installation Requirements for Deckhouse Spaces

The bulkheads in the following spaces shall be sheathed:

- All spaces in the stairwell in the deckhouse forward of Frame #36 except the forward work area and electronics room (see above).
- The engineer's control room.

The sheathing supplied shall be about .050 inch thick aluminum sheet with vinyl finish similar to MALLYCLAD, Madison Heights, MI 48071 (313-585-4110).

Vertical sheathing panels shall extend above the ceilings for the above spaces to ensure a finished line at the ceiling edge. All vertical edges shall be properly sealed and trimmed with materials provided by the manufacturer of the sheathing for that purpose. The bottom edge of the sheathing shall be sealed prior to the installation of the sanitary cove base (see Clause C430).

Doors, windows, lighting fixtures, and ventilation penetrations shall be integrated into the sheathing system using moldings and vinyl faced aluminum trim pieces provided by the same manufacturer as the sheathing.

The color scheme of the sheathing shall be selected by the COR from available color options, four colors maximum.

In the pilothouse, wood or vinyl covered aluminum trim shall be fitted around windows, doors, consoles, controls and electrical panels as required to present a pleasing appearance.

In order to minimize mullions between forward pilothouse windows, no joinery shall be provided between forward windows.

D. CEILINGS

Suspended ceilings shall be installed in the engineer's control room, and the deckhouse forward of Frame #36, except for the electronics room (described above).

1. All Deckhouse Spaces (Excluding Toilet/Shower Spaces and Pilothouse)

A suspended, vinyl faced, Class A fire resistant, fiberglass panel ceiling, 5/8 inch thick, shall be installed for the overhead of the engineer's control room and all deckhouse spaces forward of Frame #36, except for the heads and pilothouse.

The ceiling furnished shall be a drop-in ceiling tile system similar to Armstrong Commercial Ceiling Panels. Type "Random Fissured" with square lay-in with acoustical NRC minimum value of .55 and minimum R value of 2.6 Btu.

The ceiling tile system shall use metal T tracks for 24 inch by 24 inch and 24 inch by 48 inch tile sizes, with perimeter support angles. The metal track system shall also accept and support the standard 2 ft by 4 ft, two tube fluorescent light fixtures. The track system shall be hung from the framing system of the deck above.

The color scheme of the ceiling and the track system shall be selected by the COR from available color options.

The finished clear headroom height shall be 7'-0" except where additional height is required for door clearance. The ceiling may be "stepped" to accommodate extended ceiling height at doors. The entire space adjacent to extended ceiling height doorways shall be of the same height as the doorway with the step down to 7'-0" head clearance occurring at the transition to the next space.

2. Toilet/Shower Spaces

All combination toilet/shower spaces and toilet spaces shall be furnished with a suspended, vinyl plastic paint faced, fire resistive, mineral fiber, non-perforated panel ceiling, 5/8 inch thick.

The ceiling furnished shall be a drop-in ceiling tile system similar to Armstrong Ceramaguard Fine Fissured Ceiling Panels with square lay-in. Tiles and tracks furnished shall be white in color.

The ceiling tile system shall use metal T tracks for 24 inch by 24 inch and 24 inch by 48 inch tile sizes, with perimeter support angles. The metal track system shall also accept and support the standard 2 ft by 4 ft, two tube fluorescent light fixtures. The track system shall be hung from the framing system of the deck above.

The finished clear headroom shall be 7'-0".

3. Pilothouse Overhead

The pilothouse overhead shall be furnished with a suspended, vinyl plastic paint faced, fire resistive, mineral fiber, non-perforated panel ceiling, 5/8 inch thick.

The ceiling furnished shall be a drop-in ceiling tile system similar to Armstrong Ceramaguard Fine Fissured Ceiling Panels with square lay-in.

The ceiling tile system shall use metal T tracks for 24 inch by 24 inch and 24 inch by 48 inch tile sizes, with perimeter support angles. The metal track system shall also accept and support the standard 2 ft by 4 ft, two tube fluorescent light fixtures. The track system shall be hung from the framing system of the deck above. The finished clear headroom shall be 7'-0".

Oak plywood minimum 3/4 inch thick shall be furnished and installed for the full width ceiling above the console in the pilothouse. The lower side of the plywood shall be flush with the finished drop ceiling surface. Plywood in this area shall be used for mounting overhead equipment. To support these loads, the plywood shall be bracketed and bolted directly to steel house structure. Fore and aft length of plywood shall match fore and aft length of the console.

C437 FURNITURE & FURNISHINGS

A. CONTRACT DRAWINGS

#610-B215-01 GENERAL ARRANGEMENT
#610-B233-01 PILOTHOUSE DETAILS

B. PILOTHOUSE

The pilothouse shall be furnished with:

- A split-type console with wing for charts and a computer station as shown on contract drawing #610-B233-01.

- Movable swivel pilot's chair. The chair shall be a TURNBULL CO., model 525-013.

- A glass front frame suitable for the ABS certificate or operator's license. The glass front shall be shatter proof safety glass or Lexan. A mounting location shall be accepted by the COR prior to installation.

- A built-in, L-shaped settee with storage drawers beneath the seating. Settee shall have padded seats and back.

- A vanity with a small stainless steel bar sink. The countertop shall be covered with Formica and contain a cabinet beneath and place for an under the counter refrigerator/freezer. The sink shall have both hot and cold water service.

- One under the counter refrigerator/freezer similar to Sears-Kenmore. The refrigerator/freezer shall have a minimum total volume of 6.0 cubic feet.

- A coffee maker.

- A low consumption water closet (1.6 gallons). The water closet with tank shall be similar to a CRANE Miser (vitreous china) with elongated rim. The water closet shall be supplied with an open front seat with lid and stainless steel hinge. The water closet shall be contained within a wooden enclosure that opens from the top and front for use. A two-roll toilet paper holder shall be supplied and installed.

Colors of the pilot's chair, settee, console, and the vanity shall be selected by the COR from the available colors.

C. FORWARD STORES (Hold Level)

The forward stores shall contain the following:

- Two 74 inch high x 18 inch deep x 36 inch wide wire shelving units with a load capacity per shelf of 800 lbs. Shelves supplied shall be similar to Grainger, stock #7D258.
- One 74 inch high x 18 inch deep x 48 inch wide wire shelving unit with a load capacity per shelf of 600 lbs. Shelf to be supplied shall be similar to Grainger, stock #7D259.
- One 60 inch wide x 30 inch deep x 34 inch high cabinet bench with shop top, similar to Grainger, stock #7D217. One side of the cabinet bench shall be fitted with a sliding door and the second side shall be fitted with a set of six drawers.

D. FORWARD WORK AREA (Main Deck Level)

A working area shall be provided in the machinery space/workshop and it shall be equipped with a workbench fitted with an 8-inch swivel base vise, tool board, tool storage and spare parts storage. Two steel storage cabinets similar to E-Z Bilt Storage Cabinets by PENCO (610-666-0500) shall be provided and installed. The cabinets shall be 36 inches wide and 24 inches deep. One cabinet shall be equipped for all shelving and the second cabinet shall be equipped for a combination of shelving and wardrobe.

A stainless steel laundry sink shall be provided and installed in the workshop. The spigot shall be a single combined gooseneck with lever style faucet handles. The sink shall be plumbed for hot and cold potable water and gray water drain.

A free standing water cooling shall also be provided and installed adjacent to the laundry sink.

E. LAUNDRY

The laundry shall contain the following:

- One large capacity washing machine similar to a Whirlpool, Ultimate Care II, super capacity, Model LSQ9549LQ with a 2 speed motor and 3.2 cu. ft. capacity shall be provided and installed. The washing machine shall be of the same manufacture and matching model as the clothes dryer.

- One large capacity clothes dryer similar to a Whirlpool Gold, ultra capacity, electric dryer, Model GEQ9800LW with 7.4 cu. ft. capacity and front door lint screen. The clothes dryer shall be of the same manufacture and matching model as the washing machine.

- A cabinet over the washer and dryer to store cleaning supplies.

The area shall be served by a floor drain to the gray water system. The floor covering shall be sloped down to the drain.

Permanent hook-up to vessel water and drain systems will be provided for the washing machine. The dryer shall be properly vented to the outdoors. The washer and dryer shall each have a dedicated electrical receptacle and shall be on separate circuits with breakers.

F. ENGINEER'S CONTROL ROOM & WORKSHOP

The engineer's control room shall be arranged as shown on the contract drawings. It shall contain the following:

- Engineer's control console
- A desk
- A chair
- Two two-drawer filing cabinets

The engineer's workshop shall contain:

- A stainless steel utility sink shall be provided and installed in the workshop. The spigot shall be a single combined gooseneck with lever style faucet handles. The sink shall be plumbed for hot and cold potable water and gray water drain.
- A built in workbench, at a height of 34 inches fitted with an 8-inch swivel base vise, tool board, tool storage and spare parts storage. Two steel storage cabinets similar to E-Z Bilt, shall be provided and installed. The cabinets shall be 36 inches wide and 24 inches deep. One cabinet shall be equipped for all shelving and the second cabinet shall be equipped for a combination of shelving and wardrobe.

G. CREW'S LOUNGE

The crew's lounge shall be provided and furnished with the following items:

- 3 seat, gray vinyl lounge corner unit, with laminated corner table, steel frame, medium oak color, similar to Chromecraft LB74564
- Coffee table
- 32 inch color television with TV stand suitable to hold DVD and VCR equipment
- VCR and DVD player wired to the television and mounted on the TV stand
- Computer work station with metal desk top and shelf riser, similar to Lyon
- A chair

H. SHIP'S OFFICE

The ship's office shall be provided and furnished with the following:

- Two, single pedestal desks
- Two office chairs with dual wheel carpet casters

I. STATEROOMS

1. General

Staterooms are located in the deckhouse and shall be arranged as shown on the contract drawings.

All berths shall have storage drawers beneath. The bunks shall be built for an 80 inch mattress with a 1 inch "finger" clearance left all around the mattress.

A bunk light shall be provided and installed above each berth. A duplex outlet shall be installed in each stateroom bulkhead (minimum four per room), with no more than two duplex receptacles on a single circuit with breaker.

Colors of the bunks, chairs and cushions, storage lockers, and desks to be selected by the COR from the available colors.

2. Captain's Stateroom

In addition to the above, the Captain's stateroom shall be furnished with the following:

- One double bed
- Computer work station with metal desk top and shelf riser, similar to Lyon
- An office chair with dual wheel carpet casters
- An armoire

3. Chief Engineer's Stateroom

In addition to the above, the Chief Engineer's stateroom shall be furnished with the following:

- One single berth
- L-shaped computer work station
- Two two-drawer filing cabinets
- An office chair with dual wheel carpet casters
- An armoire

4. First Mate's Stateroom

In addition to the above, the First Mate's stateroom shall be furnished with the following:

- One single berth
- An armoire
- A chair

5. Two Man\Four Man Staterooms

Each two man or four man stateroom shall be furnished with the following

- One or two double berths (upper and lower) with drawers beneath the lower berth
- One or two double lockers or armoires
- A desk
- A chair

6. Forward Guest Stateroom

On the Texas deck, the forward, port stateroom shall be a guest room for a single person. In addition to the above, the stateroom shall be furnished with the following:

- One single berth
- An armoire
- A desk
- A chair

J. HEAD'S & SHOWERS

The head/shower spaces and the two public heads are located in the deckhouse and shall be arranged as shown on the contract drawings.

1. Stateroom Heads & Showers

The stateroom heads and showers shall be furnished as follows:

- A low consumption water closet (1.6 gallons). The water closets with tanks shall be similar to CRANE Misers (vitreous china) with elongated rims. Each water closet shall be supplied with an open front seat with lid and stainless steel hinge.

- A shower, minimum of 36 x 36 inches. Each shower shall be equipped with a shower curtain.

- A built-in vanity with storage base beneath. The vanity shall contain a countertop-mounted lavatory. The vanity countertop shall be covered with Formica, color to be selected by the COR from available colors.

- A vitreous china lavatory shall be supplied for each vanity. The lavatory frame shall be supplied by the Contractor. The faucets provided for the lavatory sinks shall be low flow type, cast brass, chrome plated, and dual handled.

- A mirror and shelf over the sink, two towel bars, two robe hooks, towel bar, paper towel holder for folded towels, and a double roll toilet paper holder.

- A fluorescent light without receptacle shall be installed over each mirror.

2. Upper Deck Level Public Toilet

The upper deck level public toilet shall be furnished as follows:

- A low consumption water closet (1.6 gallons). The water closet with tank shall be similar to a CRANE Miser (vitreous china) with elongated rim. The water closet shall be supplied with an open front seat with lid and stainless steel hinge.

- A vitreous china wall mounted sink with 5 inch backsplash. The faucets provided for the sink shall be low flow type, cast brass, chrome plated, and dual handled.

- A mirror and shelf over the sink, double coat hooks, liquid soap container, towel bar, paper towel holder for folded towels, and a double roll toilet paper holder.

3. Main Deck Level Public Toilet

The main deck level public toilet shall be furnished as follows:

- A low consumption water closet (1.6 gallons). The water closet with tank shall be similar to a CRANE Miser (vitreous china) with elongated rim. The water closet shall be supplied with an open front seat with lid and stainless steel hinge.

- Two low consumption urinals (1 gallon). The urinals shall be similar to a CRANE Bedford 7-120 (vitreous china) with flush valve and vacuum breaker.

- A vitreous china wall mounted sink with 5 inch backsplash. The faucets provided for the sink shall be low flow type, cast brass, chrome plated, and dual handled.

- A mirror and shelf over the sink, three coat hooks, liquid soap container, towel bar, paper towel holder for folded towels, and a double roll toilet paper holder.

- A partition around the water closet. Partition shall include door with latch and bolt, and allow for emergency access.

- A privacy partition, floor braced, between the urinals.

K. ELECTRONICS ROOM

The electronics room shall be outfitted with shelves and racks for mounting equipment.

C440 STEWARDS OUTFIT

A. CONTRACT DRAWING

#610-B215-01 GENERAL ARRANGEMENT

B. OUTFIT

The pantry, galley and mess area shall be generally arranged as shown on the contract drawing. During Detailed Design, the arrangement shall be finalized based on the actual equipment selected with the equipment selections based on those described below. All color selections for equipment, cabinets, and counter tops shall be made by the COR during the Construction Phase.

1. Galley

All galley equipment furnished must be NSF and UL listed. The Contractor shall provide and install the following equipment:

- Dishwasher – one under the counter dishwasher similar to a Hobert model LX18H with 304 series stainless steel tank, door, and top panel.

- Electric range/oven – one electric range and oven similar to a Vulcan series E36L. The top shall be arranged to have six French plates.

- Electric griddle/oven – one electric griddle top and oven similar to a Vulcan series E24L. The griddle top shall be 24 inches wide and ½ inch thick. Also to be supplied with the griddle top is a 3 inch wide grease collector.

- Electric fryer – one floor model electric fryer similar to a Hobart model HFD225 with solid state controls. The fryer shall be supplied with stainless steel sides, automatic basket lifts, and an extra set of twin fry baskets.

- Range hood – one range hood similar to a Gaylord, shall be supplied and installed to cover the range/oven, griddle top/oven, and the electric fryer. The hood supplied shall exhaust to the outside with a variable speed fan, have fire extinguishing capability, contain a work light, and shall be equipped with a weather tight damper that opens when the fan is on.

- Refrigerator – two single section reach-in refrigerators similar to a Victory, model RS-1D-S7 with adjustable stainless steel wire shelves.

- Freezer – two single section reach-in freezers similar to a Victory, model FS-1D-S7 with adjustable stainless steel wire shelves.

- Refrigerator/freezers – two under the counter refrigerator/freezers similar to Sears-Kenmore. Each refrigerator/freezer shall have a minimum total volume of 6.0 cubic feet.

- Coffee brewer – one 12 cup automatic coffee brewer with three lower warmers similar to a Bunn model CWTF15-3. The brewer shall be supplied with five easy pour decanters (three for use with the brewer and two spares).

- Milk dispenser – one 5 gallon milk dispenser similar to a Silver King, model SK-1.

- Yogurt machine – one soft serve freezer, twin twist similar to a Taylor, model #339. The mix hopper shall have two, 20 quart capacity and shall be used to dispense yogurt. The machine supplied shall be air cooled.

- Counter top electric fryer – one counter top electric fryer similar to a Star, model 136-515A.

- Counter top mixer – one 5 quart food mixer similar to a Hobart model N-50A. The mixer shall be supplied with a stainless steel bowl, stainless steel "B" flat beater, and a "D" wire whip.

- Counter top tenderizer – one tenderizer similar to a Hobart model 403. The tenderizer shall be supplied with three different knives, narrow (3/16 inch), wide (3/8 inch) and extra wide (3/4 inch).

- Counter top toaster – one 4 slice toaster similar to a Hobart model ET27.

- Food waste disposer – one food waste disposer shall be installed in one side of the double basin sink.

If available from the equipment manufacturer, the galley equipment shall be procured with a plug-in cord. Each appliance shall be either hard wired or connected by a dedicated single receptacle to the electrical system. See contract Clause C730 for details.

Potable water service shall be supplied for the dish washer and coffee brewer in accordance with the manufacturers' recommendations.

In addition to the above equipment, the galley shall also include:

- Counter with cabinets below and cabinets above. The cabinets and counters shall be fabricated from stainless steel with stainless steel counter top. The counter top shall have a back splash. All cabinets and drawers shall be fitted with handles.

- A stainless steel work island counter with storage below. The island counter top shall be stainless steel.

- The counter tops shall be furnished with receptacles in accordance with contract Clause C730.

- A stainless steel double basin sink with single lever faucet and D spout. One side of the sink shall contain a rinser (hose spray) and the other side the food disposer identified above.

2. Ice Machines

Two ice machines shall be supplied and installed that produce contour cubes. The ice machines shall be similar to a Scotsman model #CME1056AS-32D with modular bin model #BH800. Each machine shall have air cooled condensers and shall be equipped with a water filtration system supplied by the ice machine manufacturer.

Each ice machine shall be enclosed by a 4 inch high watertight sill.

One ice machine shall be located just off the mess area and the second machine shall be in the forward work area.

3. Pantry

The pantry shall be outfitted with stainless steel wire shelving for dry food stores and racks for pot storage. Shelving supplies shall be NSF listed.

4. Mess Area

The mess area shall contain a table and seating for ten people. Coat hooks shall be mounted on the forward bulkhead

There shall also be an enclosed bulletin board, double door, lockable, aluminum frame with satin finish mounted on the forward bulkhead. The bulletin board shall be non-illuminated, 48 inches wide and 36 inches high.

C445 LIFESAVING & SAFETY

A. CONTRACT DRAWINGS

#610-B205-01 OUTBOARD PROFILE
#610-B215-01 GENERAL ARRANGEMENT

B. DESCRIPTION OF WORK

The Contractor shall provide and install the lifesaving and safety equipment listed below. The above listed contract drawings present the approximate locations of some of the equipment on the vessel. The final equipment locations shall be made by the COR during the Construction Phase.

C. LIFE SAVING EQUIPMENT

1. Buoyant Apparatus

Two rectangular buoyant apparatuses each with net platform shall be provided and installed. Each apparatus shall be USCG approved similar to a JIM-BUOY model 1310 (10 person capacity) with glass reinforced surface, shall be international orange in color, with retroreflective tape per USCG Rules, with life line, and shall be fitted with a water light. Each buoyant apparatus shall be set up to float-free from the vessel. The vessel name shall be stenciled on each buoyant apparatus.

2. Life Rings

Ten 30 inch diameter life rings, USCG approved, similar to a JIM-BUOY model number CGO-30 fitted with rope, shall be provided and installed on life ring racks. Each life ring shall be provided with a self-igniting waterlight and additional, two of the rings shall be provided with a self-activating smoke signal.

Each life ring shall be provided with 100 feet of 3/8 inch lifeline. The lifeline provided shall be resistant to deterioration from ultraviolet light. Each life ring shall be international orange in color, and shall be marked with retroreflective tape per USCG Rules. The vessel name shall be stenciled on each life ring.

Two life rings, one with smoke, shall be mounted at the pilothouse deck level. Two life rings shall be mounted at the Texas Deck and two life rings shall be mounted at the upper deck level. Four life rings, one with smoke, shall be mounted at the main deck level.

3. Life Preservers

Thirty-eight adult USCG approved Type I PFD life preservers shall be provided for the vessel. The life preservers provided shall be similar to a SAFEGUARD model 190RT, international orange in color, and shall be marked with retroreflective tape per USCG Rules. Each life preserver shall have the vessel name stenciled on it. Stowage of the life preservers shall be assigned by the COR during the Construction Phase.

D. SAFETY EQUIPMENT

1. First Aid Kit

One 24 unit first aid kit I waterproof container to be mounted in the galley\mess area.

2. Distress Signals

Twelve USCG approved hand held distress signals shall be provided. Six signals shall be orange smoke and six shall be red distress flares. The signals shall be stored in a heavy duty, waterproof, polythene type container with lid. The signals shall be stored in the pilothouse.

3. Fog Bell

One chrome plated cast bronze fog bell shall be provided and mounted on the forward Texas Deck. The bell shall have a bottom diameter of 12 inches, and shall be similar to a PERKO, model 150-012 CHR.

4. Clock & Barometer

One 4 inch diameter chrome plated marine clock and matching barometer shall be provided and installed in the pilothouse.

C450 UTILITY BOAT

A. CONTRACT DRAWINGS

#610-B205-01 OUTBOARD PROFILE
#610-B215-01 GENERAL ARRANGEMENT

B. DESCRIPTION OF WORK

The Contractor shall provide a utility boat and wooden resting cradle for the utility boat. The boat and cradle shall be located as shown on the above contract drawings.

The boat provided shall be 18 feet in length, with 5 foot bottom and 30 inch sides similar to a Lynn's Boats (601-638-7235), model #1860L. The boat shall have the following features:

- Provided with a minimum of 120 Hp (crankshaft), diesel inboard motor, similar to a Cummins MerCruiser model 1.7 MS 120 with sterndrive.
- Equipped with the USCG safety package, including navigation lights
- Total weight of boat and supplied gear shall not exceed 2200 lbs.
- Provided with a rain cover.
- The name of the towboat shall be stenciled on the port and starboard sides of the utility boat hull.

The utility boat shall rest on padded wooden cradles, with the bow slightly higher than the stern, so that any rainwater will collect and flow out of the drain plug. The cradle shall be high enough at the stern in order that the motor can remain "down" in the normal operating position.

Securing cleats and tag lines shall be supplied with the utility boat for use with the deck in raising and lowering the boat into the water.

C455 DECK CRANE

A. CONTRACT DRAWINGS

#610-B205-01 OUTBOARD PROFILE
#610-B215-01 GENERAL ARRANGEMENT

B. DESCRIPTION OF WORK

The Contractor shall be provide and install one articulating crane on the upper deck, aft, to be used for boat handling. The approximate location of the crane is shown on the contract drawings.

The crane shall have a minimum capacity of 2300 pounds at a 20 foot radius. The crane supplied shall be similar to a National Crane, model N-50.

The crane shall be provided with a dedicated electric-hydraulic power pack with integral hydraulic fluid reservoir. Start and stop controls shall be located with the crane and adjacent to the hydraulic power pack, if the power pack is located remotely from the crane.

Anti two block and load moment limiting devices shall be provided with each crane.

The hull structure shall be designed to support the deck crane. A foundation shall be provided for the crane capable of withstanding the maximum crane rated dynamic moment, together with all vertical and slewing forces, without exceeding allowable working stress levels for the foundation structure. Calculations shall be submitted with the structural design drawings to show the adequate support of the crane.

C456 CAPSTAN & WINCHES

A. CONTRACT DRAWING

#610-B215-01 GENERAL ARRANGEMENT

B. CAPSTAN

The Contractor shall provide and install a thru-the-deck mounted, watertight capstan with bronze bushed cast capstan barrel. Capstan to be mounted on a deck insert plate and local reinforcement shall be provided under the deck to support the full load capacity of the capstan. Capstan to be located as generally shown on the contract drawing.

The capstan shall be a single barrel, spur geared, unwhelped, electrically driven capstan. The capstan supplied shall be similar to a SCHOELHORN-ALBRECHT type 22300, model 16886 with 10/10 constant HP, two speed electric motor. Motor supplied shall be 460 volt, 3 phase, 60 Hz. Capstan shall be rated at 6000 pound line pull at 48 FPM and 12000 pound line pull at 24 FPM with 30000 pound starting pull and 100000 pound static pull.

The capstan shall be supplied with a controller mounted on the main deck and a foot switch and pendant.

C. TOWING WINCHES

The Contractor shall provide and install four electric towing winches in the locations shown on the contract drawing. The winches supplied shall be similar to W.W. PATTERSON, model 65E-7.5-14. Two right hand and two left hand winches shall be supplied. Winches supplied shall allow for emergency or manual operation.

The winches shall be rated for brake/dog holding capacity of 130000 pounds, rated pull 1st wrap of 11000 pounds, line speed 1st wrap of 16 FPM, and stall pull 1st wrap of 36000 pounds. The motor to be supplied shall be 7.5 Hp, 460 volt, 3 phase, 60 Hz.

Forward and reverse pushbuttons shall be supplied for winches. For the winches containing the face wires, pilothouse and local (main deck) control shall be provided. For the winches containing the swing wires only local (main deck) control shall be provided.

For the winch controls on the main deck (local control), the controls shall be mounted in waterproof enclosures with a dripproof enclosure shield over the top. A watertight seal (rubber covers) shall be provided over the buttons.

The winches shall be welded to deck insert plates and local reinforcement shall be provided under the deck in way of each winch to support the full load capacity of the winch. Consideration shall be made for loads occurring to the deck structure from multiple winches operating at the same time.

Each winch shall be provided with a 14 inch diameter drum with 150 feet of 1-1/8 inch, twelve-strand braided rope with a urethane coating similar to Amsteel Blue (Spectron 12). The free end of the rope shall be provided with a 36 inch long swaged eye. There shall be a right regular lay for all winches.

Certification shall be obtained from the rope manufacturer certifying the rope's minimum breaking strength.

C457 TROLLEY BEAMS

The Contractor shall provide and install a set of trolley beams to be used for servicing the main engines and diesel generator engines. The trolley beams shall be installed as follows:

- Individual beams for each main engine.
- Individual beams for each diesel generator engine.
- Trolley beams removal in way of the removable stacks. See contract Clause C316.
- A transverse trolley beam installed athwartships in the upper engine room in-line with the double doors.
- A trolley hook and power pack shall be installed for each trolley beam.

The trolley beams shall be designed based on the engine manufacturer's recommendations to allow for adequate overhead clearance for piston/connecting rod removal.

C460 DRAFT MARKS, HULL MARKINGS & NAMEBOARDS

A. CONTRACT DRAWINGS

#610-B205-01 OUTBOARD PROFILE
#610-B460-01 COMMUNICATIONS MARK

B. COLOR SCHEDULE

The color schedule for the draft marks, hull markings, name boards, and stack insignia are in accordance with contract Clause C406.

C. VESSEL DRAFT MARKS

Draft marks of raised Arabic type numerals, 6-inches in vertical height and cut from 1/4 inch steel plate, shall be continuously welded to the shell plating. The draft numbers shall be located on the port and starboard sides of the vessel as shown on the contract drawing. The draft marks shall be measured from the underside of the bottom plating projected to the bottom of the numerals. The bottom of the figures shall correspond to multiples of 1 foot of draft.

D. HULL MARKINGS

The title U.S. ARMY CORPS OF ENGINEERS, in Gothic letters 12 inches high shall be cut from ¼ inch plate continuously welded to the deckhouse. The title shall be located on the deckhouse, port and starboard, as shown on contract drawing #610-B205-01.

The title U.S. ARMY CORPS OF ENGINEERS, in Gothic letters 8 inches high with a 4 inch space below to the home port, VICKSBURG, MS all cut from ¼ inch plate shall be centered and seal-welded on the stern of the vessel on centerline.

The Contracting Officer's Representative shall approve the exact locations of the hull markings prior to installation.

E. NAME BOARDS

The name of the towboat shall be displayed on name boards at four locations:

- Port and starboard abreast, of the pilothouse at the outboard rails.
- Aft end of the upper deck at the outboard rails.
- The front of the vessel at centerline in the rail of the deck below the pilothouse deck.

Exact locations shall be accepted by the COR prior to installation.

Name boards shall be made of steel, rectangular in shape, 14 gauge iron, with 12 inch high Gothic letters printed in gold porcelain finish with a blue porcelain finish background. The name boards shall be provided with a 2-inch minimum border all around.

F. STACK INSIGNIA

Each stack shall be marked with a Corps of Engineers insignia and a stack band.

Two Corps of Engineers insignias shall be fabricated and installed, one each on the port and starboard stacks in clear view when the vessel is viewed in profile. The Communications Mark is detailed in contract drawing #610-B460-01.

The base plate, castle and border of the insignia shall be made of 316 stainless steel plate, 3/8 inch thick. The castle and border shall be attached to the base plate with 2 inch long stainless steel standoffs. The base plate will be the background for the Communication Mark and will be painted in accordance with contract drawing #610-B460-01. Both sides of the base plate shall be coated with millage equal to that applied to the deckhouse exterior. An assembled Communications Mark shall be bolted to each stack, on the outboard side, centered in the stack band.

Painted, red stack bands shall completely encircle each stack. The red stack bands shall be trimmed with painted silver bands. The width of each red stack band shall be twice the height of the castle with 6 inch silver bands above and below the red stack band. The red for the stack bands and the silver for the trim bands are defined in contract Clause C406.

C461 NOTICES & MARKINGS

All notices shall be stamped or engraved on brass or plastic plates. All weather exposed nameplates, notices, and markings shall be of brass.

As a minimum, the following signs shall be provided and installed by the Contractor:

- "NO SMOKING" notices shall be placed at each fuel oil, gear oil, hydraulic oil, and lube oil fill station.

- All controls, gauges, switches, etc., shall be labeled with phenolic label plates to permit operation of the vessel.

- An engraved metal fire control plan. See contract Clause C679.

- Manholes, vents, fills and sounds shall be marked with tank identification and intended service with brass tags.

- Each General Alarm light and bell shall be marked "GENERAL ALARM – WHEN EMERGENCY ALARM SIGNAL RINGS GO TO YOUR STATION" in red letters at least ½ inch high on a corrosion-resistant plate or sign. The background of the plate shall be white. For General Alarm System requirements, see contract Clause C692.

- Confined spaces shall have a sign stating "Confined Space DANGER Permit Required" that shall be located at each entry to each tank, hull void and hold compartments.

C470 INTERIOR COMMUNICATIONS

A. PUBLIC ADDRESS/LOUDHAILER SYSTEM

A public address/loudhailer system similar to a RAYMARINE, model RAY-430 shall be provided and installed in order to provide communication between the pilothouse and stations listed below. The system shall be provided with the following basic components and features:

1. Master Control Unit

The master control unit is located in the pilothouse that shall include a portable microphone handset, with a press-to-talk switch and a 15 foot retractable coiled cord, and an internal speaker with volume controls for the microphone and talkback circuits. Controls shall consist of a power switch, and a selector for the talkback circuits or the loudhailer. The unit shall be powered from the 12 volt DC system.

2. Talk Back, Hands-Free Stations

Talk back, hands free stations shall be provided and located on the foredeck, the main deck, port and starboard by the fuel fill stations, and the upper deck by the utility boat.

3. High Powered Loudspeakers

A high powered loudspeaker shall be located in the overhead, on the forward Texas Deck and a second speaker shall be located on the aft end of Texas Deck.

4. Automatic Foghorn Capability

The foghorn feature of the unit shall be equipped with six preprogrammed fog signals meeting the requirements of the USCG International and Inland Rules-of-the-Road.

B. INTERIOR COMUNICATION

Interior communications shall be provided by a fixed, two-way calling and voice communication system. The system shall be powered from a main or reserve power supply that is independent of the vessel's electrical system.

Stations shall be provided in the following locations:

Pilothouse	Mess Area
Captain's Stateroom	Upper Engine Room
Pilot's Stateroom	Engineer's Control Room
Crew's Lounge on Upper Deck	Generator Room
Ship's Office on Upper Deck	Steering Gear Room
First Mate's Stateroom	Forward Stores in Hull
Chief Engineer's Stateroom	Machinery Space
Forward Work Area	Lower Engine Room

A "call signaling" horn and flashing light shall be installed in the upper engine room, generator room, steering gear room, machinery space, and lower engine room to alert personnel when those stations are being called. Headsets shall be provided at those stations.

The master control unit shall be installed in the pilothouse.

C472 NAVIGATION EQUIPMENT

A. GENERAL REQUIREMENTS

Navigation equipment shall be furnished for the towboat in accordance with USCG Regulations 33 CFR, Subchapter P - Part 164, Navigation Safety Regulations. The equipment provided shall allow for operation on the Mississippi River and the Gulf Intracoastal Waterway (GIWW).

As a minimum, the following equipment shall be provided and installed:

- Two radar monitors and three radar arrays (see below)
- One fathometer (depth sounder) with three transducers: port, starboard, and portable (see below)
- One swing meter
- One GPS/DGPS similar to Furuno with chart plotter
- Two VHF radios, similar to ICOM, with antennas
- One air horn with whistle light

Appropriate navigation lights and shapes (day markers) as required for operation on the Mississippi River and the Gulf Intracoastal Waterway (GIWW) shall be provided for the vessel in accordance with the USCG Navigation Rules International-Inland. The installation of the navigation lights and the searchlights are defined in contract Clause C730.

B. SPECIFIC EQUIPMENT REQUIREMENTS

1. Radar System Configuration

The vessel shall be provided with two radar arrays on the pilothouse top and two monitors (displays) located in the pilothouse. The system shall also be configured to allow the starboard radar display to read signals from a remote radar array located on the head of the tow.

In order to read signals from the remote radar array, the Contractor shall install a selector switch integrated with the starboard radar monitor. The selector switch shall allow the operator to use the starboard radar monitor to either receive signals from the starboard side radar array located on the house top or from a remote radar array located on the forward head of the tow. Cabling shall be supplied and installed from the starboard radar monitor and selector switch in the pilothouse to a receptacle on the starboard towknee. The Contractor shall supply and install the receptacle along with a matching plug for the receptacle. The Contractor shall also supply a third radar array, matching the pilothouse top units, as loose gear for the Corps to install.

2. Depth Sounder & Transducers

Depth sounder supplied shall allow for reading signals from the port, starboard or remote transducers.

The Contractor shall supply and install on the starboard towknee, a receptacle that allows for plugging in a portable, remote transducer for the depth sounder. The Contractor shall supply the remote transducer on a boom along with the matching plug for the receptacle.

3. Electronic Chart System

The Contractor shall supply and install an electronic chart system similar to the CAPN, capable of reading S-57 Inland Electronic Nautical Charts (S-57 INECS). The system provided shall be capable of linking to the vessel's DGPS\GPS system. Electronic charts shall be supplied for the lower Mississippi River, and the Atchafalaya River.

C. DISTRICT RADIO

A district radio will be supplied as Government furnished equipment. The Contractor shall install the radio in the pilothouse.

D. AIR HORN REQUIREMENTS

An air horn, similar to a Kahlenberg model Q3-A, figure #413 air horn with light bracket and M-300 whistle light (clear lens) shall be provide and installed. The horn, whistle light, and light bracket shall be chrome plated. The air horn shall be supplied with a bronze manual whistle valve. Air for the horn shall be supplied from a dedicated air compressor and receiver similar to those available from Kahlenberg. See contract Clause C690 for air receiver requirements.

C480 TELEPHONE & DATA COMMUNICATIONS

A. CONTRACT DRAWING

#610-B480-01 TELEPHONE\DATA COMMUNICATIONS\TV SYSTEMS

B. DESCRIPTION OF WORK

The Contractor shall supply and install components for a complete telephone and data communications network in accordance with the above contract drawing. The system also includes the following components and features:

1. Masts for Antennas

The Contractor shall provide and install two 1-1/2 inch diameter antenna masts with one mast for a cellular phone antenna and the second mast for use as a wireless networking equipment antenna. Each mast shall be 10 feet in length and mounted on the pilothouse top. Each mast shall be mounted a minimum of 5 feet from each other as well as 5 feet from any other antenna on the pilothouse top. The masts shall be constructed to allow for their lowering when the vessel passes beneath a low bridge.

The antennas for the cellular phone and for the wireless networking equipment shall be provided and installed by the Government after vessel delivery.

2. Mounting Racks & Equipment

Two racks shall be installed in the Electronics Room for the network equipment. The racks shall be installed side-by-side with the centerline of the racks located at least 6 feet from a bulkhead. Each rack shall be bolted to the deck. A vertical bridging channel shall be mounted between the two network equipment racks and a vertical rack channel shall be mounted on the outside of the racks.

One of the network equipment racks shall contain a shielded patch panel, a horizontal cable manager, an Ethernet switch, cantilevered shelf, a surge suppressor and a rack mounted UPS. The second network equipment rack shall contain two cantilevered shelves to be used by the Government to install equipment after vessel delivery. During the Construction phase, the Government will designate the locations and equipment to be assigned to the network racks.

The Contractor shall also provide and install a painted 4 feet by 4 feet sheet of painted plywood on a bulkhead in the Electronics Room. The plywood shall be used as a telephone equipment mounting board by the Government to mount telephone equipment after the delivery of the vessel.

3. Wiring

Telephone and data communications network wiring\cabling shall be installed as follows:

- One Cat5 shielded twisted pair shall be run from the Electronics Room to each telephone or network jack. All network cables shall be punched down into a shielded patch panel and bundled together neatly.

- All telephone cables shall be bundled together in the Electronics Room where telephone equipment is installed. Cable shall be installed with adequate slack in the cables to allow for cutting the cables to the appropriate length once the telephone and network equipment is installed.

- A 12-pair cable shall be run from a main deck bulkhead to the Electronics Room. The termination location on the main deck shall be determined during the Construction Phase. The termination on the main deck shall be set up to allow Government personnel to attach a connector to the cable end on the main deck level and tie into shore side telephone lines. The termination of the cable in the Electronics Room shall be at the location of the telephone equipment mounting board. Adequate slack shall be provided in the cable end in the Electronics Room to facilitate the Government installation of telephone equipment.

- For the cellular phone antenna, 7/8 inch coaxial cable similar to Heliax shall be installed from the antenna mounting pole to the telephone equipment mounting board in the Electronics Room. Ample slack shall be left on each cable end to allow for equipment installation. The cable shall be sealed from moisture at the pilothouse top. The Contractor shall supply connectors for the cable in order that the Government may install equipment after vessel delivery.

- For the wireless networking antenna, cable similar to Cisco Aironet Low-Loss antenna cable shall be supplied and installed. The cable shall run from the antenna on the pilothouse top to the networking rack in the Electronics Room. Ample slack shall be left on each cable end to allow for equipment installation. The cable shall be sealed from moisture at the pilothouse top.

4. Faceplates (Bezels)

Faceplates shall be supplied that have three slots for modules. For the spaces being supplied telephone and data communications networks, the faceplates are designated 2T2NV, 2T2N, and 2T. The configurations of these designations are defined on the contract drawing.

The exact locations of the faceplates in the various spaces provided service shall be determined during construction.

C481 TELEVISION SYSTEM

A. CONTRACT DRAWING

#610-B480-01 TELEPHONE\DATA COMMUNICATIONS\TV SYSTEMS

B. DESCRIPTION OF WORK

The Contractor shall supply and install a satellite TV system to serve the staterooms, lounge, mess area, and offices in accordance with the above contract drawing. The system includes the following components:

1. Major Equipment

One satellite antenna system similar to a KVH TracVision C3 Satellite TV Antenna System shall be supplied and installed. The satellite dish shall be installed on the pilothouse top. Other system equipment shall be installed in an audio\visual equipment rack located in the Electronics Room on the Half Deck. The audio\visual equipment rack shall be bolted to the floor with the centerline located at least 4 feet from a bulkhead. A vertical rack channel shall be mounted on the side of the rack.

2. Wiring

RG6 coaxial video cables shall be run from the audio\visual rack located in the Electronics Room to each video jack in the spaces designated on the contract drawing. The cable shall be neatly bundled at the audio\visual rack with adequate slack. Connectors shall be supplied for the cables, but not installed. The Government will install the cable connectors after the remaining equipment is installed in the audio\visual rack.

The Contractor shall also install a minimum of 60 feet each of the following cable types:

- RG6 coaxial RF signal cable.
- Antenna power cable.
- Antenna Data Cable.

The three cables shall be run from the satellite TV antenna system to the audio\visual equipment rack in the Electronics Room.

3. Faceplates (Bezels)

Faceplates shall be supplied that have three slots for modules. For the spaces being supplied audio\visual service, the faceplates are designated 2T2NV and shall be configured as:

- A double Cat5e module in the top position (both jacks for telephones)
- A single video module in the middle position.
- A double Cat5e module in the bottom position (both jacks for LAN).

The exact locations of the faceplates in the various spaces provided service shall be determined during construction.

THIS PAGE INTENTIONALLY LEFT BLANK

C600 MACHINERY

C601 GENERAL REQUIREMENTS FOR PIPING SYSTEMS & MACHINERY

A. GENERAL

All machinery and piping systems shall be in accordance with the regulatory bodies referenced in contract Clauses C003 and C004, and shall also comply with additional regulatory bodies where specified. References made to specific sections of codes, rules and standards in these specifications are intended to emphasize specific salient items.

All equipment shall be rated for marine duty service.

All pumps are to be provided with mechanical seals.

Machinery guards shall be provided over all rotating and hazardous machinery. The guarding shall be consistent with that required by the U.S. Army Corps of Engineers, "Safety and Health Requirements Manual."

Manufacturers' recommendations, concerning fabrication and installation of equipment, shall be followed in addition to these specifications.

B. PRESSURE & TEMPERATURE GAUGES

All pressure gauges shall give readings in psig and all temperature gauges shall give readings in degrees Fahrenheit. The gauges shall be selected so the operating point is in the middle of the gauge range. All gauges shall be fitted with gauge isolation valves.

Pressure gauges shall be provided on the discharge of all pumps, and pressure/vacuum gauges shall be provided on the suction side of all positive displacement pumps.

Temperature gauges shall be provided on all piping that transfers a medium in excess of ambient temperature.

C. PIPING – GENERAL REQUIREMENTS

Piping shall be sized and arranged to obtain optimum operating conditions for the equipment and intended service. Items of piping not covered in these specifications, but required for proper installation and operation shall be furnished and installed the same as if specified.

System design shall route all piping as directly as practicable; shall not interfere with structure, machinery access or handling gear; and shall be sufficiently flexible and supported to account for thermal expansion, shock, vibration and the working of the vessel. Wherever practicable, piping shall be run below the grating or sole level. No piping runs shall be made through access openings.

A sufficient number of unions and /or flanges shall be installed in all pipe lines to permit dismantling of the lines and equipment. Valves shall be installed in sufficient quantity to isolate any piece of equipment in the systems.

Sufficient drains shall be provided to permit draining of all lines within the vessel in an even trim condition. The drains shall be provided at low spots in the piping, located so that they will be readily accessible. Screwed plugs shall be brass in all piping systems.

Pipes passing through watertight or oiltight bulkheads shall be made of extra heavy pipe in that section, in way of the penetration and the bulkhead or deck shall maintain its integrity. Where pipes pass through watertight bulkheads or decks, the penetrations shall be watertight.

Heat sensitive materials shall not be used in piping systems that penetrate watertight subdivisions where deterioration of such systems would, in the event of a fire, impair the watertight integrity of such bulkheads. Copper tubing that penetrates watertight bulkheads and decks shall use a suitable stuffing tube. Spool pieces with flanges shall be provided for all galvanized pipe penetrations to prevent the destruction of galvanizing due to welding.

All piping exposed in unheated spaces or to the weather and carrying fluids that can freeze shall be electrically heat traced, except that the fire main piping may be designed such as to be a dry system when not pressurized. Freeze protection shall be provided by installing drain plugs at all low points in all piping systems carrying fluids that can freeze.

D. PIPING – SPECIFIC REQUIREMENTS

All piping shall be schedule 40, ASTM A-53, Type S or E except where otherwise indicated.

All piping between the side shell and the first inboard valve shall be a minimum of schedule 80. Fasteners for valves at the hull connections and sea chests shall be stainless steel. All tank penetrations shall be through schedule 80 welded couplings unless specified elsewhere.

When three or more valves are located together for the same service, they shall be combined in a manifold.

Manually operated valves shall be readily operable by one person, directly or through mechanical advantage type operators.

E. PIPE ROUTING RESTRICTIONS

Piping shall not be run over or in the vicinity of switchboards, distribution panels, or other electrical equipment unless unavoidable, in which case flanged joints, valves, etc. shall not be installed in the vicinity of the electrical equipment.

Piping conveying flammable materials shall not be routed adjacent to or over hot surfaces unless unavoidable, in which case adequate shields shall be provided.

F. PIPE HANGERS

Rigid hangers shall be designed and located in accordance with ASTM Practices for the Design and Installation of Rigid Pipe Hangers, F708-92 (1997). The hangers shall safely support the weight of the piping, its operating or test fluid (whichever is heavier), and its insulation and lagging (where installed).

The number of supports installed, the type selected and their location shall prevent excessive vibration of piping under all system operating conditions, but they shall not constrain the piping to such an extent as to cause excessive transfer of load from support to piping or from support to support.

The locations and type of supports selected shall be to prevent excessive stress from being transmitted by the piping to machinery, equipment, or ship structure.

Hangers for copper pipe or tubing shall be lined with plastic. Non-ferrous metal pipes shall be insulated from direct contact with any steel structure.

G. PIPE CLEANING

All piping, piping appurtenances and applicable equipment shall be thoroughly cleaned after fabrication and prior to installation in the vessel. After complete installation, each system shall be thoroughly cleaned and flushed of all foreign matter with the applicable system's medium, or an approved substitute.

System flushing shall be conducted at the applicable system's maximum operating pressure and temperature, and above normal line velocity. However, prior to flushing operations, such units as heat exchangers, and control valves, having in-line mechanisms capable of trapping or being affected by the carryover of foreign matter, shall either be removed or blanked-off and bypassed.

C602 EQUIPMENT & PIPE MARKING

A. EQUIPMENT MARKING

Nameplates, serial number plates, tags, etc. shall remain in place on the equipment as furnished by suppliers. The Contractor shall use caution during construction to not damage or paint over nameplates. Damaged name plates shall be replaced prior to Final Acceptance.

All nameplates and notices shall be stamped or engraved on brass or plastic plates. All weather exposed nameplates, notices, and markings shall be of brass.

All controls, gauges, switches, etc., shall be labeled with phenolic label plates to permit operation of the vessel. This includes pilothouse equipment as well.

Label plates shall be attached to all mechanical equipment to indicate the system and function of the equipment.

B. PIPE MARKING

The Contractor shall mark all piping in the vessel to indicate its service and usage. The pipes shall be marked at each termination and at each watertight bulkhead penetration to indicate service and flow direction. Piping shall also be marked at the midpoint of long compartment runs.

Where possible, the Contractor shall follow wordings/combinations that conform to ANSI/OSHA specifications. To meet this requirement, standard markers, similar to those available from Seton shall be used.

All piping shall be marked and color coded in accordance with the following:

SYSTEM LEGEND	MARKER COLOR	LETTER COLOR
BALLAST	GREEN	WHITE
BILGE	GREEN	WHITE
BLACK WATER	BLACK	WHITE
CO2	RED	BLACK
COMPRESSED AIR	YELLOW	BLACK
DECK DRAIN	GRAY	WHITE
ENGINE COOLING	BLUE	WHITE
FIRE MAIN	RED	WHITE
FIRE MONITORS	RED	WHITE
FUEL OIL	YELLOW	BLACK
GEAR OIL	YELLOW	BLACK
GRAY WATER	GRAY	WHITE
HYDRAULIC	YELLOW	BLACK
LUBE OIL	YELLOW	BLACK
OILY BILGE	ORANGE	BLACK
POTABLE WATER	GREEN	BLACK
WASTE OIL	ORANGE	BLACK

The size of the legend letters and the length of the marker color field shall be as follows:

OUTSIDE DIAMETER OF PIPE OR COVERING IN INCHES	MINIMUM LENGTH OF COLOR FIELD IN INCHES	SIZE OF LEGEND LETTERS IN INCHES
¾ to 1-3/8	8	½
1-1/2 to 2-3/8	8	¾
2-1/2 to 6	12	1-1/4
8 to 10	24	2-1/2
over 10	32	3-1/2

Label plates shall be attached to all valves, manifolds, and pumps to indicate the system and function of the equipment.

For valves, the label plates shall be installed over the stem of the hand wheel, where possible, and shall indicate the direction of opening (or closing). The nameplate shall be 14 gauge (or heavier) brass with ¼ inch high engraved letters filled with black paint.

C605 PROPULSION SYSTEM

A. CONTRACT DESIGN DEVELOPMENT

The propulsion system for the contract level design has been developed utilizing:

- Caterpillar model 3512B, high displacement engines, rated at 1675 bhp at 1600 rpm, and
- Falk model 2083 MRH P&S horizontal, offset reverse reduction gears with internal shaft brakes. The gears have a reduction ratio of 7.087:1.

The contract drawings supplied with this solicitation reflect the Caterpillar engines and Falk reduction gears.

Alternative engines and gears may be selected at the Contractor's discretion in accordance with the requirements identified below, with the alternatives meeting the identified requirements.

If alternative engines and\or gears are selected, the Contractor is responsible for revising the design and the design drawings to reflect the selected alternatives.

B. CONTRACT DRAWINGS

#610-B605-01 PROPULSION SHAFTING & ARRANGEMENT
#610-B615-01 STEERING LINKAGE & STRUT

C. MAIN ENGINES

The Contractor shall provide and install two, identical, marine 4-stroke-cycle diesel engines of American manufacture. Each engine shall be equipped with full authority, electronic computer controlled fuel injection systems.

The engines shall be installed so that when the clutches are engaged to propel the vessel forward, the propellers rotate "inboard at the top".

Each engine shall be continuous rated, with an engine continuous power rating between 1600 bhp and 1800 bhp with an rpm range between 1600 and 1800 rpm. Each engine shall be turbocharged/aftercooled.

Each engine shall be provided with the manufacturer's standard equipment as well as the following features and options:

- Approved by ABS.
- Same rotation.
- Set up for air start. Air starting motors to be supplied by the engine manufacturer. Air starting motors shall be of the oil-less type.
- Set up for electronic controls.
- Configured as a closed jacket water cooled system using keel coolers. Coolant level sensors and gauges to be provided.
- Auxiliary expansion tanks and/or larger jacket water pumps if required to handle the cooling volume. Auxiliary expansion tanks shall be fitted with low level alarms.
- Electric jacket water heater.
- Each engine shall be equipped with a crankcase vent filter/collector system similar to a NELSON EcoVent Recirculator. The EcoVent shall be supplied with a manometer and the drain line shall be returned directly to the engine oil sump, below the oil level.
- Each engine turbocharger and exhaust manifold shall be insulated or jacketed to maintain an outer skin temperature of less than 125 degrees F.
- Engine overspeed protection shall be provided in accordance with ABS Rules.
- Electric prelube pumps.
- The water, lube and fuel lines to all engine connections shall be fitted with USCG and ABS approved flexible connections.
- Each main engine oil sump shall be fitted with a ball valve and quick disconnect fitting so that oil can be added to or drawn from the sumps.
- Provided with a full length drip pan under the engine.
- Inboard access for local instrumentation panel and engine maintenance points.

- Each engine shall be supplied with lifting eyes and mounting support. The Contractor is responsible for supplying suitable foundations for the engines and marine transmissions.

- The fuel rate of the main engines shall be compared to the original factory performance specifications during the vessel's test and trials. This comparison shall be made for the entire operating range of the engines by a representative of the engine manufacturer using instrumentation to acquire real-time fuel rate and engine output.

- Four sets of manuals shall be supplied for the engines and the gears.

- Spare parts in accordance with contract Clause C805.

The engines and all associated equipment shall be installed in strict compliance with the engine manufacturer's recommendations and the installation shall be approved by the manufacturer's field representative.

D. ENGINE COMBUSTION AIR

Each main engine shall be fitted for a dedicated source of outside air for combustion. Each combustion inlet shall be fitted with an intake air cartridge filter similar to an Amer-Kleen Cartridge Double-Pak manufactured by American Air Filter. The Contractor shall size the filters based on the engine manufacturer's combustion requirements for the main engines selected.

E. MAIN ENGINE STARTING/STOPPING

Each engine shall be set up for air start. Starting and stopping of the main engines shall be at the Main Engine Control Panels located in the lower engine room between the main engines.

The Contractor shall provide and install on the pilothouse console, in accordance with ABS Rules, an emergency engine shutdown for each main engine. The emergency shutdowns shall be alarmed at the Main Engine Control Panels. Normal operation shall be resumed only after manual reset of the emergency shutdowns at the Main Engine Control Panels. No automatic restarting is allowed after activation of the emergency shutdowns. All emergency shutdown buttons shall be provided with guards to prevent accidental activation.

F. REDUCTION GEAR & SHAFT BRAKE

The Contractor shall provide and install a horizontal offset reverse-reduction gear with an internal shaft brake for each main engine. The gear ratio shall be selected to provide approximately 225 shaft rpm at maximum rated engine rpm. Each gear is to be capable of handling the full horsepower of each main engine in both ahead and astern operation.

Each gear shall be suitable for throttle boost, torque up control sequencing (time overlap between clutch application and shaft brake release), and shall have electric shift capability. Each gear is to produce Full RPM Ahead to Full RPM Astern in 16 seconds. Internal shaft brakes shall be provided to fulfill this requirement.

Each gear is to be provided complete with pumps, filters, thermometers, and the appropriate engine flange and controls. A torsional input coupling shall be provided.

The opposed propeller rotation will be provided by running one gear in forward and one gear in reverse.

Each gear shall be fitted with a ball valve and quick disconnect fitting so that gear oil can be added to or drawn from the gears.

G. PROPULSION CONTROL SYSTEM

The Contractor shall provide and install a complete control system for each main engine and reduction gear. The control systems shall be set up for full electronic control with all electronic throttle and shift. No mechanical actuators may be provided as part of the control system. The installed control system shall meet the recommendations and practices of the engine, gear, and control system manufacturers.

The control system for each main engine and gear set shall incorporate:

- Throttle boost
- Engine torque-up sequencing (time overlap between clutch application and shaft brake release)
- Proportional neutral delay
- Shaft brake

The control system shall be configured to sequence the engines, reduction gears, clutches, and shaft brakes to accommodate and utilize torque-up and engine throttle boost. Control system delays, as well as boost and/or torque-up features shall be fully adjustable through software changes.

The control system supplied shall serve two stations, the engineer's control room (station #1) and the pilothouse (station #2). Each control station shall be equipped with a dual lever control head. The main station for the control heads (throttles) shall be the engineer's control room. Control is granted/transferred from this station to the pilothouse control head. Control of the throttles may be taken away from the pilothouse to the engineer's control room at any time.

The control system shall also interface with the steering electronic controls to allow for independent flanking rudder and steering rudder operation. See contract Clause C615 for these requirements.

Power for the control system shall be set up such that:

- The power supplied is from a clean source.
- Back-up source of power is automatically transferred to in the event of a loss of primary power.

H. MAIN ENGINE INSTRUMENTATION & ALARMS

The Contractor shall supply and install the standard, local instrumentation panel supplied by the engine manufacturer. The local instrumentation panels shall be mounted inboard, between the main engines.

Each main engine shall be provided with an engine monitoring system available from the engine manufacturer. For this vessel the Contractor shall supply and install a system similar to a Caterpillar Engine Vision System and a Caterpillar Engine Monitoring System.

The monitoring system provided and installed shall report and display engine system diagnostics and present audible and visual alarms for any of the engine and gear parameters measured. All audible alarms shall be provided with silencer buttons.

The Engine Vision System shall be installed in the engineer's control room and shall allow for the simultaneous monitoring of each main engine and gear's operating parameters. For engine monitoring in the pilothouse, the Contractor shall supply and install the Engine Monitoring System for each main engine and gear set. All pilothouse instrumentation shall be furnished with lights and dimmer switches.

The instrumentation provided for the engineer's control room shall be connected to an audible horn and flashing light located in the upper engine room as well as a set located in the lower engine room to give notice of an engine or gear problem.

The engineer's control room shall also contain the following additional alarms and instrumentation for the each main engine and gear:

- Low starting air pressure alarm
- Pyrometers for measuring the exhaust stack temperatures
- Low level alarm for auxiliary expansion tanks
- Shaft tachometer for each main engine

In addition to the Engine Monitoring System, the pilothouse shall also have shaft tachometers supplied and installed for each main engine. The shaft tachometers shall be supplied with lights and dimmer switches.

I. TORSIONAL VIBRATION ANALYSIS

A complete torsional vibration analysis shall be performed on the propulsion drive train, and the results shall be submitted to the COR for review and approval during the engineering phase of the contract. The analysis shall include calculations of the natural frequencies, location of all critical speeds within the entire speed range of the engines, and an estimate of the maximum vibration stresses encountered within this range. All terms and formulae used in the development of this analysis shall be explicitly indicated. The torsional critical speeds shall be checked in accordance with ABS requirements.

The results of the analysis shall insure that each assembled system, which included the diesel engine, coupling, reduction gear, shafting and propeller shall be free of objectionably ("barred ranges") critical speeds due to torsional vibration over the complete range of operation from 10% below idling speed to 10% above the maximum engine speed rating.

If the Contractor's analysis indicates that there are critical speeds in the operating range, the COR shall be immediately notified with documentation of the problem and recommended solution.

J. PROPULSION SYSTEM ALIGNMENT

All propulsion system final alignment shall be performed with the vessel complete and afloat at normal load displacement. Alignment shall be in accordance with the engine and gear manufacturers' requirements, and ABS requirements.

The shafting installation and alignment shall be checked prior to launch to verify proper bearing alignment and to ensure that no shafting is binding.

Collision chocks shall be provided and installed for both engines to prevent engine movement. The collision chocks shall be welded to the engine beds. Threaded jacking bolts shall be provided in the engine mounting pads to aid in engine alignment.

The engines and reduction gears shall be chocked after alignment with resin chocking. Chocking shall be applied in accordance with the manufacturer's recommended procedure. All surfaces, including bolts, shall be coated with proper releasing agent.

After being properly chocked, the mounting bolts shall be torqued down to manufacturer's specifications. All engine and reduction gear foundation bolts shall be fitted bolts provided by the Contractor.

Bolts in the collision chocks shall be snugged against the engines after final alignment. Sufficient clearance shall be provided between the engines and the collision chock bolts to accommodate engine thermal dimensional growth.

C606 PROPELLERS

A. CONTRACT DRAWINGS

#610-B605-01 PROPULSION SHAFTING & ARRANGEMENT
#610-B615-01 STEERING LINKAGE & STRUT

B. CONTRACT DESIGN SELECTION

During Contract Design, calculations showed that the following propellers would be appropriate for use on the vessel:

- 5 blade
- 102 inch diameter
- Inboard turning
- 0.80 DAR – approximate
- CT INLAND style

C. DETAILED DESIGN SELECTION

The Contractor shall prepare propeller calculations to finalize the selection of the propellers. The calculations shall utilize the engine power and gear ratio selected by the Contractor.

The calculations shall be submitted to the COR for review prior to purchase by the Contractor.

The propellers provided shall be:

1. Five-bladed, 102 inch diameter, similar to CT INLAND style wheels available from Rolls Royce\Bird-Johnson.

2. The actual variable pitch and DAR shall be determined as required for a design speed of 8.5 mph.

3. ABS grade CF-3 stainless steel.

4. Double-sided, anti-singing edges.

5. One of the propellers shall be right hand and one shall be left hand.

6. Set up to rotate inboard at the top.

7. Each propeller shall be provided with a fairwater cap covering the propeller nut and providing for smooth waterflow.

8. Provided with pull holes in the hubs.

D. DESCRIPTION OF WORK

The Contractor shall install the propellers in accordance with the contract drawings listed above.

The Contractor shall provide an ABS statement of fact that each propeller meets all ISO R484, Class II fabrication, finish, and balance requirements. ABS certificates shall be provided to the COR for each propeller including the spares. See contract Clause C805 for spares.

C610 SHAFTING SYSTEM

A. CONTRACT DESIGN DEVELOPMENT

The shafting system shown on the contract drawings has been designed and sized in conjunction with the engines and gears selected for the contract level design (i.e. main engines of 1675 bhp at 1600 rpm and marine gears with a reduction ratio of 7.087:1).

As identified in the contract clauses above, the Contractor, at his discretion, may select alternative engines and gears.

If the Contractor implements changes to the engines and/or gears selection, he must revise the shafting system design in accordance with ABS requirements to match the power and shaft rpm perimeters selected.

However, irrespective of the engines and gears selected, the Contractor may not reduce the size of the shafting from the 8.75 inch diameter shown on the contract drawings.

B. CONTRACT DRAWINGS

#610-B605-01 PROPULSION SHAFTING & ARRANGEMENT
#610-B615-01 STEERING LINKAGE & STRUT

C. DESCRIPTION OF WORK

The contract drawings listed above present a Contract Design for the shafting and struts. During the Detailed Design the Contractor shall perform engineering to finalize the shafting system.

Specific requirements of the shafting system are as follows:

- Shaft material shall be ABS Grade II steel.
- Shafts shall be continuous, without knuckle joints, ABS approved.
- Nickel-chrome-boron liners shall be fitted over the shaft where the shaft makes contact with the bearings and the shaft seal.
- The shaft "propeller end" and the "coupling end" details shall be to SAE J755 and SAE J756, respectively.
- The strut bearing and the stern tube bearing shall be similar to Johnson DURAMAX cutless bearings.
- Stuffing boxes shall be inflatable "air seal" type with grease lubrication, similar to Johnson, Figure 1787-IR.

Each stern tube shall be fitted with a water lubrication system consisting of pump, motor, piping, valves and duplex strainers in order to supply water for lubrication of the stern tube bearings. Size of the equipment and piping shall be based on the Contractor's final selection of the shafts and stern tube bearings. Each stern tube shall be provided with a valued purging vent, terminating at the Main Deck level.

D. SHAFT STRUTS

V-type shaft struts shall be installed in accordance with the above contract drawings. The shaft strut arms shall be fabricated with semi-circular front and trailing edges.

The shaft strut arms shall run through the hull plating and tie into the main deck plating. The struts shall be double continuous welded to the main structural members that they connect as well as to the main deck plating. See contract Clause C398.
Doubler plates shall act as closure plates around the strut arms.

The shaft struts shall be sized as required by ABS.

E. LINE CUTTERS

Serrated line cutters shall be provided on the aft end of each strut bearing housing to cut any rope which becomes wrapped around the shaft.

C612 RUDDERS

A. CONTRACT DRAWINGS

#610-B605-01 PROPULSION SHAFTING & ARRANGEMENT
#610-B612-01 RUDDER ARRANGEMENT (3 sheets)
#610-B615-01 STEERING LINKAGE & STRUT

B. DESCRIPTION OF WORK

The contract drawings listed above present a Contract Design for the steering and flanking rudders. During the Detailed Design the Contractor shall verify that the rudder stock scantlings meet the requirements of the current ABS Rules.

Speed for the steering and flanking rudder designs shall be 12 mph. The hard over angle for all rudders shall be 45 degrees. It should be noted that ABS requires increases in stock size for rudders that rotate more than 35 degrees, and for speeds in excess of 10 mph.

The Contractor shall perform all detail engineering necessary to incorporate the rudders into the steering system final design including rudder construction, stocks, bearings, stops, grease seals, grease fittings and keys.

C. GENERAL REQUIREMENTS

All cylinder foundations, jockey bars, and tillers shall be fitted with bronze bushings. Bushings shall be located where the cylinders meet the foundations or tillers and where the jockey bars meet the tillers.

Pins supplied shall be stainless steel. There shall be grease grooves on the pins with drilled passageways and alemite fittings. The Contractor shall ensure that all pins installed do not result in a loose fit. Anti-rotation clips shall be installed for the pins joining the jockey bars to the tiller arms.

Rudder stocks shall be fabricated from ABS approved steel with nickel-chrome-boron liners in way of the upper and lower bearings. The upper and lower rudder stock bearings shall be made from SAE 660 bronze pressed into the housings.

The steering and flanking rudder tubes shall be sealed at the bottom with plates and packed with grease.

D. STEERING RUDDERS

The steering rudder system shall consist of four steering rudders similar to those shown on the contract drawings. The steering rudders shall be keyed alike and be interchangeable.

Steering rudder travel shall be 45 degrees to each side of centerline. Maximum time for travel from hardover to hardover shall not be greater than 10 seconds in the bollard condition.

The steering rudders shall be configured to provide independent steering rudder pair control actuation and movement. The port steering rudder pair shall not be mechanically linked to the starboard steering rudder pair.

E. FLANKING RUDDERS

The flanking rudder system shall consist of four flanking rudders similar to those shown on the contract drawings. The leading and trailing edges of the flanking rudders shall be notched to clear the propeller shaft in the hardover condition. The flanking rudders shall be keyed alike and be interchangeable.

Flanking rudder travel shall be 45 degrees to each side of centerline. Maximum time for travel from hardover to hardover shall not be greater than 10 seconds in the astern bollard condition.

The flanking rudders shall be configured to provide independent flanking rudder pair control actuation and movement. The port flanking rudder pair shall not be mechanically linked to the starboard steering rudder pair.

C615 STEERING SYSTEM

A. CONTRACT DRAWINGS

#610-B605-01 PROPULSION SHAFTING & ARRANGEMENT
#610-B612-01 RUDDER ARRANGEMENT (3 sheets)
#610-B615-01 STEERING LINKAGE & STRUT

B. SYSTEM SIZING REQUIREMENTS

The contract drawings listed above present a Contract Design for the steering system. The Contractor shall perform engineering to finalize the system and establish a Detailed Design.

The system to be provided is an electro-hydraulic steering system providing for full follow-up control for the steering and flanking rudders. The system shall meet all ABS requirements for towboats.

Sizing of the steering hydraulics (pumps, cylinders, etc) shall be based on the most demanding powering condition to allow the steering rudders and the flanking rudders to go from hardover to hardover in 10 seconds. Both flanking and steering rudder travel is from 45 degrees to each side of centerline.

C. SYSTEM CONFIGURATION

The system provided shall be configured such that:

- The main (steering) rudder pairs can be operated independently of each other. There is no central jockey bar tying the port steering rudder pair to the starboard steering rudder pair.

- The flanking rudder pairs can be operated independently of each other. There is no central jockey bar tying the port flanking rudder pair to the starboard flanking rudder pair.

- The system is equipped with “electronic jockey bar” capability that allows for the pair of steering rudders to be tied together as well as it allows for the pair of flanking rudders to be tied together at the operator’s discretion. This simulates a standard towboat steering and flanking system utilizing central jockey bars to tie the port and starboard rudder pairs together.

- The steering system is also electrically interlocked with the propulsion system controls to provide an auto-centering feature. See contract Clause C605 for the requirements of the propulsion control system.

The electrical interlocks are set up to operate in the following manner:

There is an electrical interlock between each main (steering) rudder pair (port and starboard) and its corresponding main engine. The interlocks automatically center a main (steering) rudder pair when the corresponding main engine is operating in the astern direction, without affecting the position of the other main (steering) rudder pair. As such, the main steering rudder levers (in the pilot house) normally only control the main rudders when the corresponding engines are in the ahead direction.

There is an electrical interlock between each flanking rudder pair (port and starboard) and its corresponding main engine. The interlocks automatically center a flanking rudder pair when the corresponding main engine is operating in the ahead direction, without affecting the position of the other pair of flanking rudders. As such, the flanking rudder levers (in the pilot house) normally only control the flanking rudder pairs when the corresponding engines are in the astern direction.

The auto-centering feature for the main (steering) rudders and the flanking rudders can be overridden by the operator by activating the 'electronic jockey bar' feature.

D. SYSTEM MODES

A selector switch shall be installed on the pilothouse console allowing the operator to select one of the three different modes of operation for the steering system. Those modes are full follow-up mode, override mode, and jog mode.

The modes are defined as follows:

- If full follow-up (FFU) mode is selected, the electrical interlocks are enabled between the pair of steering rudders (the astern interlock) and the pair of flanking rudders (the ahead interlock). The vessel then responds as described above.
- If the override (OVR) mode is selected, the electrical interlocks are disabled. In the override mode, the vessel's steering responds in the normal towboat style.
- If the jog (JOG) mode is selected, the steering system operates in a non-follow-up mode. There are no interlocks enabled. The vessel is then steered using the jog levers in the pilothouse, with individual jog levers controlling each pair of main rudders (port or starboard) and each pair of flanking rudders (port or starboard).

E. EQUIPMENT

1. Hydraulic Power Packs

The Contractor shall provide and install two hydraulic power units located in the steering gear room. One power unit shall serve the main (steering) rudder system with the second unit serving the flanking rudder system.

Each power unit shall be equipped with two electric motors, with each motor powering dual integrated pumps. The pumps shall be dual stacked of the positive displacement type. The outlets from each pump shall be plumbed to separate cylinders in order that differing loads on the port and starboard rudder pairs do not result in different rudder speeds.

One motor and dual pump set shall be sized to fully supply the cylinders in its respective (flanking or steering) rudder system. The second motor and dual pump set on the hydraulic power unit shall be a back-up to the first motor and dual pump set on the hydraulic unit.

The motors on the hydraulic units shall be electrically driven, with each motor set up on a separate motor controller, powered from the 480 volt AC system.

A hydraulic oil temperature gauge shall be mounted on each hydraulic unit.

A 2 inch deep drip pan shall be fabricated around each hydraulic power unit. The hydraulic fluid used in the systems shall be biodegradable.

2. Cylinders

A cylinder shall be provided for each pair of flanking rudders and steering rudders. The cylinders provided shall be of the unbalanced type.

3. Steering & Flanking Levers

Two paired sets (port and starboard) of "stacked" steering and flanking levers shall be provided in the pilothouse. Both steering levers shall be linked mechanically to move simultaneously. Similarly, both flanking levers shall be linked mechanically to move simultaneously.

Jog levers for the flanking and steering rudders shall also be installed in the pilothouse. The jog levers allow for operation in the non-follow-up mode.

4. Rudder Angle Indicators

Dial type rudder angle indicators shall be provided and installed in the pilothouse, two for the main (steering) rudders and two for the flanking rudders. The rudder angle indicators installed in the pilothouse shall be furnished with lights and dimmer switches.

5. Piping

All hydraulic piping and fittings shall be socket welded steel, schedule 40, minimum.

All valves shall be steel, ASTM A-216.

F. CONTROLS, ALARMS & INSTRUMENTATION

The Contractor shall provide and install a steering system control and alarm panel in the pilothouse similar to Engine Monitor, Inc (EMI). The panel shall contain the following:

- Off-on switches and selector switches for operating the hydraulic pumps
- Pump running indicator lights for each pump
- Steering Mode Selector Switches
- System alarms

The steering system alarms provided in the pilothouse shall be in accordance with the ABS River Rules, Section 4/3.2.14 and shall also include a loss of hydraulic system pressure alarm. The alarms provided shall be visual and audible. Alarm silencing buttons shall be installed for the panel.

The Contractor shall provide and install steering system alarm panels in the engineer's control room and the steering gear room. The alarm panels supplied shall mimic the alarms required above. Each panel shall also omit visual and audible alarms and be provided with alarm silencing buttons.

The alarm panel located in the engineer's control room shall also incorporate pump running indicator lights for each pump.

C630 FUEL OIL SYSTEM

A. GENERAL REQUIREMENTS

The Contractor shall provide and install all pumps, filters, piping, hoses, and valves required to form a complete fuel oil system. The system shall serve the main engines, diesel generator sets, and the fire pump diesel engine, and have the capability of transferring fuel between all of the fuel oil tanks.

B. FUEL OIL TANKS

See Clauses C130 and C320 for fuel oil tank capacities and details of the construction of the fuel oil tanks.

C. TANK SOUNDS

All fuel oil tanks shall each be fitted with a 1-1/2 inch sounding tube. Each sounding tube shall be run as straight as practical and located at the lowest part of the tank. The sounding tube shall be of the flush mount type, with tee wrench. At the tank bottom there shall be installed a 6 inch x 6 inch striking plate of at least 3/16 inch thickness, seal welded to the tank bottom.

The port, starboard, and service fuel oil tank sounds shall be installed outside of the deckhouse.

A sounding tape and plumb bob shall be supplied in order to sound the tanks.

D. VENTS, FILLS & FUEL TRANSFERRING

The port, starboard, and service fuel oil tanks shall be filled via a manifold, located in the lower engine room. The tank fills shall be through a 4 inch nominal line. The tank fills shall be located port and starboard in spill containments. Each fuel fill shall terminate 18 inches above the deck with a bronze screw cap labeled “FUEL.”

The port, starboard, and service fuel oil tanks shall each be fitted with a 5 inch vent that terminates in a gooseneck and is fitted with a corrosion-resistant flame screen.

The fill stations shall be located, port and starboard, between Frame #37 and #39. The fills and vents shall terminate inside permanent spill containment boxes that entirely enclose the vents and fills. The box shall be fitted with a watertight door fitted with a hasp and padlock. Each door shall incorporate a rain lip and air passage for ventilating the enclosure when the door is closed.

The fuel oil day tank shall be fitted with an overflow line running to the port main fuel oil tank, and a vent that terminates 18 inches above the main deck. The fuel oil day tank vent shall be located in a spill containment fitted with a watertight, hinged lid, hasp, and padlock. The lid shall incorporate a rain lip and air passage for ventilating the enclosure when the lid is closed.

Two positive displacement fuel oil transfer pumps shall be provided to assist with the filling and transferring of fuel oil. The pumps provided shall be rated for use with fuel oil. The system provided shall facilitate the transfer of fuel oil between the port, starboard, and service fuel oil tanks. The system shall also allow for filling the day tank from the port, starboard, or service fuel oil tanks.

An emergency stop button shall be installed for each fuel oil transfer pump in the vicinity of the manifold.

E. STRIPPING CONNECTIONS

A 1 inch (nominal) pipe drain, with a gate type shut-off valve shall be fitted approximately ½ inch from the bottom on each of the fuel oil tanks. The stripping connections shall be located for ease of accessibility.

F. SUPPLY & RETURN LINES

The Contractor shall install supply and return lines for each main engine, each diesel generator set engine, and the fire pump diesel engine. The size of the lines installed shall be in accordance with the engine manufacturer's requirements for the engines selected.

For the main engines, fuel shall be supplied from the fuel oil service tank. For the port main engine, fuel shall be returned to the port fuel oil tank. For the starboard main engine, fuel shall be returned to the starboard fuel oil tank. The return headers shall be installed as high as possible in the port and starboard fuel oil tanks.

High and low fuel oil suctions shall be provided in the fuel oil service tank. The high suction shall be approximately 9 inches above the tank bottom, and the low shall be approximately 3 inches above the tank bottom.

For the diesel generator engines, and the fire pump diesel engine fuel shall be supplied and returned to the day tank. The return headers from the engines shall be located as far as practicable from the exits for the fuel supply headers. The return headers shall be installed as high as possible in the fuel oil day tank.

The Contractor shall be responsible for sizing, providing, and installing ABS and USCG approved flexible connections between each main engine, each diesel generator engine, and the fire pump diesel engine for connecting to their respective fuel supply headers and fuel return headers. The flexible connections supplied shall also meet the engine manufacturer's specifications.

G. EMERGENCY SHUT-OFF VALVES & ISOLATION VALVES

Each tank connection subject to a static head of fuel shall have a shut-off valve at the tank with a remote operated reach-rod operable from the outside the house on the main deck level. The reach-rods shall run as directly as possible to the shut off valves to avoid problems with the U-joints.

Additional ball valves shall be installed for the fuel oil system in order to allow for isolating the system for maintenance and repair.

H. TANK GAUGING & LEVEL ALARMS

The port and starboard fuel oil tanks, the fuel oil service tank, and the day tank shall be fitted with a liquid level gauge similar to a KENCO model 9900 series level gauge with integral valves. The liquid level gauges shall have all stainless steel construction and each gauge shall be calibrated to show ¼ tank level, the ½ tank level, and the ¾ tank level.

For the port and starboard fuel oil tanks, and the fuel oil service tank, a remote reading tank capacity gauge or sensor shall be installed in each tank. The gauges or sensors shall transmit the tank level to a monitor in the engineer's control room. The gauges or sensors shall report the amount of fuel remaining in the port and starboard fuel oil tanks, the fuel oil service tank and the fuel oil day tank in gallons.

For the fuel oil day tank and the fuel oil service tank, a low level alarm shall be installed in each tank. A warning shall sound at a tank capacity of 25% and low alarm at a capacity of 10%. The alarm shall be audible and visual, and shall be recorded at alarm panels located in the engineer's control room and at the pilothouse console.

Alarm panels shall be installed at each fuel fill station, the fuel transfer station (the manifold) in the lower engine room, and the engineer's control room to report a high tank level in the port and starboard fuel oil tanks, the fuel oil service tank and the fuel oil day tank. Audible and visual alarms shall be received at these alarm panels with a warning sounding at a tank capacity of 90% and a high alarm at a capacity of 95%.

I. FUEL OIL FILTERING

The Contractor shall supply and install a solids retaining centrifugal separator similar to an Alfa-Laval, model MIB, for cleaning marine diesel oil. The unit shall be piped to take fuel oil from either the port or starboard fuel oil tank or from the port fuel oil tank, starboard fuel oil tank, and fuel oil service tank simultaneously (batch processing). After running through the centrifugal separator, the cleaned fuel oil shall be discharged to the fuel oil service tank. The centrifugal separator shall have a minimum throughput capacity of 200 gallons/hour.

A reducing unit with filter shall be supplied for the compressed air line connection.

Separator shall be supplied with an alarm to detect a broken liquid seal in the centrifugal separator. The remote indication lamp from the alarm shall be installed in the engineer's control room.

J. PRIMARY FUEL FILTERS

The fuel oil supply lines to each main engine, each diesel generator set, and the fire pump diesel engine shall be equipped with individual duplex RACOR fuel filters/water separators.

The Contractor shall be responsible for sizing, providing, and installing the RACOR filters based on the engines selected. The RACOR filters supplied shall meet the engine manufacturer's specifications.

The RACOR filters shall be mounted so a 5-gallon bucket can be placed under the filter. A tray or pan with 6 inch deep sides shall be provided for resting the bucket.

C635 LUBE OIL, GEAR OIL & HYDRAULIC OIL SERVICE SYSTEMS

A. CONTRACT DRAWINGS

#610-B130-01 TANK CAPACITY PLAN
#610-B215-01 GENERAL ARRANGEMENT
#610-B245-01 HOLD & MACHINERY ARRANGEMENT

B. GENERAL REQUIREMENTS

The Contractor shall supply and install all components, piping, and valves necessary to form complete service systems for distributing lube oil, gear oil, and hydraulic oil to the respective equipment on the vessel.

All piping for the systems shall be seamless black steel, A106.

The lube oil, gear oil, and hydraulic oil tanks shall be sized and constructed in accordance with Clauses C130 and C320, and located as shown on the contract drawings.

The main engine sumps, the reduction gears, the diesel generator set sumps, and the fire pump diesel engine sump shall all be fitted with quick disconnects in accordance with Clauses C605, C675, and C733 of the contract.

C. TANKS GAUGING, FILLS, VENTS & SOUND CONNECTIONS

The lube oil tank, gear oil tank, and hydraulic oil tank shall each be fitted with a liquid level indicator similar to a KENCO model 9900 series level gauge with integral valves. The liquid level gauges shall have all stainless steel construction and each gauge shall be calibrated to show ¼ tank level, the ½ tank level, and the ¾ tank level. The liquid level indicators furnished shall be appropriate for the type of oil be gauged.

Each tank shall be equipped with a 1-1/2 inch fill and a 2 inch vent. Each fill and vent shall terminate 18 inches above the main deck. Each fill shall be fitted with a bronze screw cap and safety chain. Each fill shall be clearly labeled to indicate its intended service. Each vent shall terminate in a gooseneck and be fitted with a corrosion-resistant flame screen.

A 1 inch (nominal) pipe drain, with a shut-off valve and pipe cap, shall be fitted at the lowest point of each tank. This line shall be used for tank cleaning purposes.

The fills and vents shall terminate in a permanent spill containment box (or boxes) that entirely encloses the vents and fills. The box (or boxes) shall be fitted with a watertight, hinged lid fitted with hasp(s) and padlock(s). Each box lid shall incorporate a rain lip and air passage to ventilate the enclosure.

The lube oil tank shall also be fitted with a 1 inch valve for taking out small amounts of clean lube oil. Valve to be positioned on tank in order that a small can or bucket may be placed beneath.

The lube oil tank shall be fitted with a 1-1/2 inch sounding tube. The sounding tube shall be run as straight as practical and located at the lowest part of the tank. The sounding tube shall be of the flush mount type, with tee wrench. At the tank bottom there shall be installed a 6 inch x 6 inch striking plate of at least 3/16 inch thickness, seal welded to the tank bottom.

D. LUBE OIL SERVICE SYSTEM

The Contractor shall provide and install a complete lube oil service system configured to allow for the pumping of:

- Clean lube oil from the lube oil tank to any of the main engines.
- Dirty lube oil from the sumps of the main engines.

System supplied shall include a dedicated lube oil pump and meter (reading in gallons). ABS and USCG approved flexible connections shall be supplied at each engine sump.

The Contractor shall supply and install a solids retaining centrifugal separator similar to an Alfa-Laval, model MAB for cleaning marine lube oil. The unit shall be piped to take lube oil from and return to either main engine. The separator shall be rated to clean high temperature engine lube oil.

A reducing unit with filter shall be supplied for compressed air line.

Separator shall be supplied with an alarm to detect a broken liquid seal in the centrifugal separator. The remote indication lamp from the alarm shall be installed in the engineer's control room.

E. GEAR OIL SERVICE SYSTEM

The Contractor shall provide and install a complete gear oil service system configured to allow for the pumping of:

- Clean gear oil from the gear oil tank to the reduction gears.
- Dirty gear oil from the reduction gears to the waste oil tank.

Gear oil service system supplied shall include a dedicated gear oil pump and meter. ABS and USCG approved flexible connections shall be supplied at each reduction gear.

F. HYDRAULIC OIL SERVICE SYSTEM

The Contractor shall provide and install a complete hydraulic oil service system configured to allow for the pumping of:

- Clean hydraulic oil from the hydraulic oil tank to the steering hydraulic units.
- Dirty hydraulic oil from the steering hydraulic units to the waste oil tank.

System supplied shall include connections at the hydraulic units for filling and draining the reservoirs, a dedicated hydraulic oil system pump, and hoses or flexible connections that are ABS and USCG approved.

C636 WASTE OIL SYSTEM

A. CONTRACT DRAWINGS

#610-B130-01 TANK CAPACITY PLAN
#610-B215-01 GENERAL ARRANGEMENT
#610-B245-01 HOLD & MACHINERY ARRANGEMENT

B. GENERAL REQUIREMENTS

The Contractor shall supply and install all components, piping, and valves necessary to form a complete waste oil system. The system is connected to the lube oil, gear oil, and hydraulic oil service systems in order to collect used oil from the main engines, the reduction gears, and the steering hydraulic units. See contract Clauses C630 and C635.

All piping for the system shall be seamless black steel, A106.

The waste oil tank shall be sized and constructed in accordance with contract Clauses C130 and C320, and located as shown on the contract drawings.

C. TANK GAUGING, PUMP OUT, VENT, & SOUND CONNECTIONS

The waste oil tank shall be fitted with a liquid level indicator similar to a KENCO model 9900 series level gauge with integral valves. The liquid level gauge shall have all stainless steel construction and shall be calibrated to show ¼ tank level, the ½ tank level, and the ¾ tank level. The liquid level indicator furnished shall be appropriate for waste oil service.

A 1-1/2 inch pump out line shall be installed for the waste oil tank and shall terminate 18 inches above the deck with a bronze screw cap. A 1-1/2 inch dump line shall be installed to allow for dumping in waste oil from the main deck level. The dump line shall be run as straight as possible from the main deck level to the waste oil tank. Dump line shall terminate 18 inches above the deck with bronze screw cap.

A 2 inch vent, terminating in a gooseneck and fitted with a corrosion-resistant flame screen, shall also be provided for the tank.

The tank pump out line and vent shall terminate in a permanent spill containment enclosure on the main deck. The enclosure shall be fitted with a watertight, hinged lid with hasp and padlock. The lid shall incorporate a rain lip and air passage to ventilate the enclosure.

A 1 inch (nominal) pipe, with a shut-off valve and pipe cap shall be fitted at the lowest point possible for the waste oil tank. This line shall be used for tank cleaning purposes.

The waste oil tank shall be fitted with a 1-1/2 inch sounding tube. The sounding tube shall be run as straight as practical and located at the lowest part of the tank. The sounding tube shall be of the flush mount type, with tee wrench. At the tank bottom there shall be installed a 6 inch x 6 inch striking plate of at least 3/16 inch thickness, seal welded to the tank bottom.

D. SYSTEM CONFIGURATION

A positive displacement pump, similar to an Oberdorfer shall be supplied and installed to pump out the waste oil tank. Pump start-stop buttons shall be provided at the discharge station on the main deck level. An emergency pump stop button (palm type) shall also be installed at the main deck level discharge station.

C637 OILY BILGE SYSTEM

A. CONTRACT DRAWINGS

#610-B130-01 TANK CAPACITY PLAN
#610-B215-01 GENERAL ARRANGEMENT
#610-B245-01 HOLD & MACHINERY ARRANGEMENT

B. GENERAL REQUIREMENTS

The Contractor shall supply and install all components, piping, and valves necessary to form a complete oily bilge system. The system shall be provided to collect oily water from the main engines and fire pump diesel engine drip pans, as well as from the bilges in the machinery space, lower engine room, and shaft alley. Collected oily water shall be discharged to the oily bilge tank. The system shall also be capable of pumping the oily bilge tank overboard through a deck connection.

All piping for the system shall be seamless black steel, A106.

The oily bilge tank shall be sized and constructed in accordance with contract Clauses C130 and C320, and located as shown on the contract drawings.

C. TANK GAUGING, PUMP OUT & VENT CONNECTIONS

The oily bilge tank shall be fitted with a liquid level indicator similar to a KENCO model 9900 series level gauge with integral valves. The liquid level gauge shall have all stainless steel construction and shall be calibrated to show ¼ tank level, the ½ tank level, and the ¾ tank level. The liquid level indicator furnished shall be appropriate for oily bilge service.

A 1-1/2 inch pump out line shall be installed for the oily bilge tank and shall terminate 18 inches above the deck with a bronze screw cap.

A 2 inch vent, terminating in a gooseneck and fitted with a corrosion-resistant flame screen, shall also be provided for the tank.

The tank pump out line and vent shall terminate in a permanent spill containment enclosure on the main deck. The enclosure shall be fitted with a watertight, hinged lid. The lid shall incorporate a rain lip and air passage to ventilate the enclosure.

A 1 inch (nominal) pipe, with a shut-off valve and pipe cap shall be fitted at the lowest point possible for the oily bilge tank. This line shall be used for tank cleaning purposes.

The oily bilge tank shall be fitted with a 1-1/2 inch sounding tube. The sounding tube shall be run as straight as practical and located at the lowest part of the tank. The sounding tube shall be of the flush mount type, with tee wrench. At the tank bottom there shall be installed a 6 inch x 6 inch striking plate of at least 3/16 inch thickness, seal welded to the tank bottom.

D. SYSTEM CONFIGURATION

The Contractor shall supply a portable, air-operated double diaphragm pump similar to a Wilden to be used to pump out the drain pans and the bilges. Sections of hose with fittings shall be supplied to enable attaching the pump to quick disconnects.

A 1 inch (nominal) hard piped line shall be installed running from the oily bilge tank to the spaces served; machinery space, lower engine room, and shaft alley. A 1 inch ball valve and quick disconnect fitting shall be installed in each space to allow for the connection of a hose.

A positive displacement pump, similar to an Oberdorfer shall be supplied and installed to pump out the oily bilge tank. Pump start-stop buttons shall be provided at the discharge station on the main deck level. An emergency pump stop button (palm type) shall also be installed at the main deck level discharge station.

C640 ENGINE COOLING SYSTEM

A. CONTRACT DRAWINGS

#610-B205-01 OUTBOARD PROFILE
#610-B245-01 HOLD & MACHINERY ARRANGEMENT

B. SYSTEM SIZING REQUIREMENTS

Approximate locations for the keel coolers are shown on the above listed contract drawings. During Detailed Design, the Contractor shall perform engineering to size the engine cooling pumps and coolers based on the final selection of the main propulsion engines and gears, diesel generator engines, and the diesel driven fire pump engine. The coolers shall be sized in accordance with the engine and gear manufacturers' recommendations. The Contractor shall submit calculations for the sizing of all engine coolers.

The coolers shall be sized as follows:

For the main propulsion engines and gears, the engine cooling pumps and keel coolers shall be sized to cool the full engine horsepower at a vessel forward speed of 1 knot and the water temperature of 90 degrees F. Separate coolers shall be supplied for the jacket water coolers and the aftercoolers in accordance with the engine manufacturer's requirements.

For the generator set diesel engines, the cooling pumps and keel coolers shall be sized to cool the full generator outputs at a vessel forward speed of 0 knots and the water temperature of 90 degrees F.

For the diesel driven fire pump engine, the engine cooling pump and keel cooler shall be sized to cool the full engine horsepower at the rated rpm at a vessel forward speed of 0 knots and the water temperature of 90 degrees F.

C. COOLER REQUIREMENTS

The Contractor shall provide and install keel coolers similar to Fernstrum. The keel coolers shall be set up with the following features:

- Each keel cooler shall be single or double pass.
- Each keel cooler shall be of the thru-hull type with special gasket kits for installation.
- The circulating mixture shall be 50 percent water and 50 percent ethylene glycol by volume.
- Each keel cooler shall be rugged all welded (or brazed) construction.
- The keel cooler recesses shall be configured in accordance with the cooler manufacturer's requirements. Sloped ends shall be provided in the recesses.
- The outboard faces of the keel coolers shall be recessed at least 3 inches inside of the surrounding hull surfaces.
- Bar type cooler guard grates, removable with minimum ½ inch diameter stainless steel bolts and nuts, shall be installed over all keel coolers.
- Provided with auxiliary expansion tanks and/or larger jacket water pumps if required to handle the cooling system volume.

Flexible hose connections for the cooling water on the main engines, gears, diesel generator set engines, and the diesel driven fire pump engine shall be suited for temperatures up to 250 degrees F and pressure to 20 psig.

D. PIPING & VALVES

All piping shall be steel, non-galvanized with welded joints and fittings. The piping shall incorporate drains to allow for removing\adding coolant and to allow for working on the coolant system.

Bolted flanges shall be fitted to permit removal of pipe sections at the engine and cooler connections.

Flanged stainless steel ball type shut-off valves shall be furnished and installed at both the inlet and outlet connections to the external keel coolers. The ball valves shall have operating handles fitted with stops or detents for open and closed positions to indicate valve open and valve closed positions.

E. KEEL COOLER VENTS

All cooling systems shall be vented at the main deck level to allow for removal or bleeding off of trapped air from the cooling systems. Vents shall be equipped with ball type shut-off valves that may be locked in the closed position. The vents shall terminate at a height of 18 inches above the main deck.

All keel cooler recessed pockets shall be vented to allow entrapped air in the pockets to escape.

C650 ENGINE EXHAUST SYSTEMS

A. SYSTEM SIZING REQUIREMENTS

During Detailed Design, the Contractor shall perform engineering to size the engine exhaust systems based on the final selection of the main propulsion engines, diesel generator set engines, and the diesel driven fire pump engine. The systems shall be designed and sized not to exceed the engine manufacturer's required maximum backpressure. System installations shall be in strict accordance with the engine manufacturers' recommendations.

B. EXHAUST SYSTEM REQUIREMENTS

Each exhaust system shall be independently routed from each engine exhaust outlet through the upper deck openings and up into its respective stack. Exhaust piping in way of the upper deck opening is to be supplied with a sufficient number of take down joints or bolted connections to facilitate a clear opening when removed. The silencer for each engine shall be located in its respective stack.

Each silencer shall be similar to a Nelson 300 attenuation level 300 model. Each silencer shall have the following features:

- 35 db reduction minimum.
- Spark arrestor.
- High temperature corrosion resistant exterior coating.
- Brackets for mounting the mufflers inside the stacks.
- Cleanouts piped to an accessible location.

The silencers and exhaust line flanges shall be to ASA 125 lb standards complete with high temperature gaskets and bolts.

Suitable flanged adapters shall be provided and installed at each engine exhaust outlet. Pipe taps, 1/4 inch, shall be provided near each engine outlet to allow for the checking of the system backpressure. Steel plugs shall be provided for each tap. The Contractor is required to provide the equipment necessary and to test each system's backpressure at the exhaust elbows during tests and trials. See contract Section E.

Flanged, lined stainless steel expansion sections shall be provided, and shall be sized and located in order to prevent over stressing of the engine connecting flanges, anchor points, and piping. The joints shall use multi-ply bellows construction.

C. EXHAUST SYSTEM FEATURES

The piping runs between each main engine, generator set engine, and diesel driven fire pump engine silencer outlet and the "ends" shall incorporate the following:

- Rain proof slip joint seals at the stack top exhaust pipe penetrations.
- A 45-degree elbow and a 45-degree mitered pipe, facing up aft, and outboard.
- The exhaust pipe and fittings above the silencers shall be stainless steel.

Each exhaust system "up to and including" the silencer shall be suitably insulated. The insulation shall be a non-asbestos type similar to CLAREMAT 1200 insulating blanket. The insulation thickness shall be such that the surface temperature of the insulation does not exceed 125 degrees F. The insulation surface shall be covered by CLARTEX 1925 A557 pad fabrics. The pad fabrics shall be held in place with lacing hooks and lacing wire.

C660 BILGE & BALLAST SYSTEMS

A. CONTRACT DRAWINGS

#610-B130-01 TANK CAPACITY PLAN
#610-B245-01 HOLD & MACHINERY ARRANGEMENT

B. DESCRIPTION OF WORK

The vessel shall be furnished with a separate bilge system for dewatering compartments and a separate ballast system for trimming out the vessel. There shall also be sump pumps provided to remove water from beneath the stuffing boxes.

C. BILGE SYSTEM

The Contractor shall provide and install all pumps, manifolds, strainers, valves, piping, and gauges necessary to form a complete clean bilge system. The oily bilge system is described in contract Clause C637.

The clean bilge system shall be designed and installed in accordance with ABS rules. The system is a fixed system configured to remove water from all watertight compartments, voids, and the inner bottom beneath the main fuel oil tanks and the fuel oil service tank. The clean bilge system shall serve:

- Forward Stores
- Fuel Oil Tank Innerbottom
- Machinery Space
- Port Cooler Void
- Starboard Cooler Void
- Lower Engine Room
- Shaft Alley
- Aft, Port Void #1
- Aft, Starboard Void #1
- Aft, Port Void #2
- Aft, Starboard Void #2

Each subdivision has an independent bilge suction. Each bilge suction shall be protected by a suction strainer located at the low point of each compartment. Each suction strainer shall have a clear opening three times the total area of the connected suction pipe. The clean bilge system discharges the water overboard through a discharge located at least 12 inches above the full load waterline.

The bilge system shall also be cross-connected to the ballast system to allow for the priming of the bilge pumps from the sea chest and to allow the ballast pump to act as a back-up bilge pump.

The Contractor shall provide and install a bilge suction manifold or series of stop-check valves. Also acceptable will be gate valves with check valves arranged in a fabricated manifold. The manifold shall be located in the same space as the bilge pump it normally serves, and shall be capable of being locally controlled and easily accessible at all times.

The Contractor shall supply and install two bilge pumps similar to those manufactured by Crown (Barnes Pumps). Each pump shall be a self-priming, centrifugal pump having ABS type approval. The pumps shall be electric drive type, with the pumps and motors furnished as matched sets from the pump manufacturer. The motor controllers for the pumps shall be set-up with low voltage release. See contract Clause C750.

The Contractor shall submit a system curve, pump curve, and calculations (including NPSH calculations) to the COR for review and acceptance during the Engineering Phase of the contract before procuring the pumps.

D. BALLAST SYSTEM

The Contractor shall provide and install a pump, manifold, strainers, valves, piping, and gauges necessary to form a complete ballast system. The ballast system shall be designed and installed in accordance with ABS rules. The vessel contains five ballast tanks:

- Forward Ballast Tank
- Port Ballast Tank #2
- Starboard Ballast Tank #2
- Port Ballast Tank #3
- Starboard Ballast Tank #3

The ballast system shall be set up for the following operations:

- Filling ballast tanks
- Discharging ballast tanks overboard
- Transferring water between ballast tanks
- Back-up to the bilge system

The ballast system shall be set up to take in water through one of the sea chests. The system shall discharge water overboard through a discharge located at least 12 inches above the full load waterline.

Discharge/suction gate valves shall be installed to allow the tanks to be lined up to the discharge or suction of the ballast pump. A duplex strainer, similar to a Mueller model #692 shall be installed on the inlet side of the ballast pump that is connected to the sea chests.

The Contractor shall supply and install a ballast pump similar to an Ingersoll-Dresser, type D-800. The pump shall be a self-priming, centrifugal pump with bronze impeller. The pump shall be electric drive type, with the pump and motor furnished as a matched set from the pump manufacturer. The motor controller for the pump shall be set-up with low voltage protection. See contract Clause C750.

E. BALLAST TANKS

The ballast tanks shall be constructed in accordance with contract Clause C320. Each ballast tank shall be equipped with a:

- Tank filling line. The size of the line shall be selected by the Contractor during Detailed Design.

- Vent with flame screen. Each tank vent size shall be at least 125% of the effective area of the filling line selected above.

- 1-1/2 inch sounding tube. The sounding tube shall be as straight as practical and located at the lowest part of the tank, where practicable. The sounding tube shall be of the flush mount type, with tee wrench. At the tank bottom there shall be installed a 6 inch x 6 inch striking plate of at least 3/16 inch thickness, seal welded to the tank bottom.

F. SHAFT STUFFING BOX SUMP PUMPS

The Contractor shall provide and install an automatic sump pump similar to a Rule, model 2800 in each sump. The pumps shall be powered from the vessel's 120 volt AC system. Separate overboard discharge lines shall be provided for each sump pump. Each overboard discharge shall be located approximately 12 inches below the main deck with shut off valves provided at the hull penetrations.

C665 POTABLE WATER SYSTEM

A. CONTRACT DRAWINGS

#610-B130-01 TANK CAPACITY PLAN
#610-B245-01 HOLD & MACHINERY ARRANGEMENT

B. DESCRIPTION OF WORK

Potable water shall be distributed throughout the vessel from the potable water tanks located in the machinery space. The vessel is equipped with a potable water maker as well as having the capability to take on potable water from an off-vessel source.

The Contractor shall provide and install all components, piping, valves, and vents necessary to form a complete potable water system. All components supplied for the system shall be sized to fit through a USCG standard 28 inch x 60 inch clear opening watertight door with 6 inch radius corners.

C. POTABLE WATER MAKER

The Contractor shall provide and install a potable water maker that is capable of producing a minimum of 5000 gallons per day of potable water from any of the following sources:

- fresh muddy water
- brackish water
- salt water

The potable water maker shall be able to remove sediments, chemical compounds and bacteria present in the water of the Lower Mississippi River and its tributaries. It shall also be able to process the water found on the Gulf Intracoastal Waterway.

The water maker supplied shall be either a reverse osmosis unit or a desalinator. The water maker supplied shall be set up for discharging all sediments from the potable water making process overboard and allow system backflushing.

The water maker supplied shall include the following features:

- Pre-treatment plant or system with centrifugal filter, multi-media filter and\or flocculant injection system.
- Corrision-resistant feed pump.
- Duplex cartridge filters.
- Ultra-violet sterilizer
- Be in component form in order to fit through a USCG standard 28 inch by 60 inch clear opening watertight door.
- Test equipment to determine the water quality.
- Four copies of an operator's manual describing system operation and maintenance.

The water maker manufacturer shall supply with the unit all filters, piping, instrumentation and monitors required for the set-up and operation of the unit.

The Contractor shall install a series of carbon filters after the water maker. The potable water shall be run thru these filters.

Potable water making equipment to meet the above requirements are available from Sea-R.O. Watermakers (954-527-5282) or GET, Inc (562-989-5400).

D. DISTRIBUTION SYSTEM REQUIREMENTS

A potable water distribution system shall be supplied and installed to provide service to all fixtures on the vessel requiring potable water. The system installed shall comply with all applicable guidelines set forth by the U.S. Public Health Service. The system shall be arranged so that the entire system can be gravity drained for cold weather lay-up.

Cold water service shall be supplied to all sinks, showers, toilets, hot water heaters, ice makers, the washing machine, coffee maker, dishwasher, water fountain, and the hose bibbs located in throughout the vessel.

Hot water service shall be supplied to all sinks, showers, the washing machine, and dishwasher.

Piping material from the tanks to the pressure sets shall be stainless steel. From the pumps to the remainder of the system the piping material shall be ASTM B-88, type K, seamless copper. The solder connections shall be lead free.

All hot water piping shall be insulated.

E. POTABLE WATER PRESSURE SETS

Two potable water pressure sets with pumps shall be provided and installed with all required pressure switches, pressure gauges, and pressure relief valves. The system shall be set up requiring only the use of one pressure set. The second pressure set shall be a back-up unit.

The potable water system shall be set up such that the pressure sets cut in at 40 psi (low pressure cut-in) and cut out at 60 psi (high pressure cut-out).

The pressure sets shall be furnished with a precharged water tank with a minimum capacity of 96 gallons. The precharged water tanks should be supplied with a relief valve, which is capable of discharging the full output of the pumps.

F. HOT WATER HEATERS & RECIRCULATING PUMP

Two electric hot water heaters shall be provided and installed with all accessories. Each hot water heater shall be dual element with a capacity of 80 gallons and be similar to a RHEEM, model 81V80D.

A hot potable water circulating pump shall be installed in a hot potable water loop. The pump shall be thermostatically controlled and shall be automatically activated when the hot potable water falls below a pre-selected temperature.

G. POTABLE WATER TANKS

The potable water tanks are described in contract Clause C320. Each potable water tank shall be equipped with a:

- liquid level gauge similar to a KENCO model 9900 series level gauge with integral valves. The gauge shall be of all stainless steel construction and shall be suitable for potable water service. Each gauge shall be calibrated to show ¼ tank level, the ½ tank level, and the ¾ tank level.

- 1 inch drain with ball valve and pipe cap shall be installed on each tank to allow for the draining of the tanks. Each tank's stripping connection shall be fitted at the lowest point of each tank.

A 1 inch drain with ball valve and pipe cap shall be installed on each tank to allow draining of the tank.

A backflow-preventer shall be installed between the potable water tanks and the pressure sets.

H. POTABLE WATER FILL STATIONS

The Contractor shall provide and install a 1-1/2 inch potable water fill and 2 inch vent for each potable water tank. The potable water filling stations shall be located on the main deck on the port and starboard sides of the deckhouse.

At each filling station, the fill line shall terminate with a brass screw cap fastened by a chain to an adjacent bulkhead or fixture in such a manner that the cap will not touch the deck when hanging free. The filling connection shall be clearly marked by means of 1/2-inch lettering (minimum), stamped on a non-corrosive label plate, or equivalent.

Enclosures shall be provided for each fill with lockable hinged doors with staples to hold them open. Each door shall be provided with gaskets to prevent the intrusion of water.

Padlocks with three keys, similar to those manufactured by MASTER LOCK, shall be provided to lock each filling station enclosure.

I. HOSE BIBBS & FIXTURES

All fixtures (sinks, etc) are described in Clause C437.

The Contractor shall supply and install freeze-proof hose bibbs in the following locations:

Deck Level	Frame #	Location
Pilothouse	23	Port
Half Deck	23	Aft
Texas Deck	20	Stbd
Texas Deck	22	Port
Upper Deck	23	Stbd
Upper Deck	30	Port
Upper Deck	55	Stbd
Main Deck	13	Port, Fwd
Main Deck	29	Stbd
Main Deck	32	Port
Main Deck	55	Port
Main Deck	55	Stbd

The freeze-proof hose bibbs shall be 5/8 inch with each hose bibb outfitted with a vacuum breaker.

Interior hose bibs shall also be installed in the machinery space, and in the lower engine room. Each hose bibb furnished shall be 5/8 inch with each hose bibb outfitted with a vacuum breaker.

C667 SANITARY & SEWAGE SYSTEM

A. CONTRACT DRAWINGS

#610-B130-01 TANK CAPACITY PLAN
#610-B215-01 GENERAL ARRANGEMENT
#610-B233-01 PILOTHOUSE DETAILS
#610-B245-01 HOLD & MACHINERY ARRANGEMENT

B. DESCRIPTION OF WORK

The Contractor shall provide and install all components, piping, valves, and vents necessary to form a complete sanitary and sewage system. The sanitary and sewage system shall comply with all applicable guidelines set forth by the U.S. Public Health Service.

The sanitary and sewage system shall be set up to allow for:

- Treating both gray and black water
- Overboard discharge of treated water where allowable
- Retention of treated water
- Retention of untreated black and\or gray water

All fixtures connected to the sanitary and sewage system are described in contract Clause C437 and contract Clause 440.

C. SYSTEM CONFIGURATION & REQUIREMENTS

1. General Requirements

The system consists of two separate sections; a gray water section and a black water section. Each system shall be piped separately to the onboard sewage treatment plant.

All horizontal drain and sewer piping shall be installed with a slope of ¼ inch per foot and use the minimum number of elbows. The system shall also be installed with cleanouts and low point drains, and be arranged so that the entire system can be gravity drained for cold weather lay-up.

2. Black Water Service

Black water is collected from the water closets and urinals. Water closets are located on the pilothouse deck, the Texas deck, upper deck and main deck levels. Two urinals are located on the main deck level.

The Contractor shall provide and install vent piping for all water closets and urinals. The vent piping may be run common where possible with each vent fitted with a flame screen.

The black water piping shall be routed directly from the water closets and urinals to the treatment plant. There shall be an emergency by-pass line installed that allows for directing untreated black water to the sewage holding tank in the case that the treatment plant is out of service.

3. Gray Water Service

Cast brass "P" traps with clean outs, shall be provided and installed in the drain lines from the stateroom and toilet space sinks, the utility sinks, the ice makers, the showers, and the pilothouse sink. Traps shall be provided on all other fixtures where so recommended by the fixture manufacturer.

The Contractor shall supply and install 1-1/2 inch nominal deck drains in each toilet space and a 2 inch nominal deck drain for the Laundry Room. All deck drains furnished shall have steel bodies with removable bronze strainer plates and shall have a 2:1 ratio of strainer open area to pipe area. All deck drains shall be connected to the gray water system.

Gray water is also collected from the sinks, showers, water fountain, and the washing machine. There is a sink at the pilothouse deck level, and there are sinks and showers on the Texas deck, upper deck, and main deck levels. The water fountain and washing machine are located on the main deck level. There is also gray water collected from the galley sink with waste disposer, dishwasher, and two ice machines. This equipment is located on the main deck level.

The Contractor shall provide and install vent piping for the gray water drain lines. The vent piping may be run common where possible with each vent fitted with a flame screen.

The system shall be set up to run into a common line that directs the gray water to the treatment plant. There shall be an emergency by-pass line installed that allows for directing the untreated gray water to the gray water holding tank in the case that the treatment plant is out of service.

D. SEWAGE TREATMENT PLANT

The Contractor shall supply and install an on-board sewage treatment system for treating both the black and gray water generated on the vessel from a 16 person crew. The system installed shall be similar to a FAST marine system, model M-5 meeting the following requirements:

- The unit supplied shall meet the effluent requirements in order to meet USCG/IMO Certification.
- Provided with a stainless steel media tank.
- Provided with a regenerative turbine blower.
- Set-up to receive water directly from the black and gray water systems.
- All components supplied for the system shall be sized to fit through a USCG standard 28 inch x 60 inch clear opening watertight door with 6 inch radius corners.

The treatment plant shall be set-up to discharge treated water to:

- overboard.
- the sewage holding tank.
- the gray water tank.

The routing of the treated water shall be at the operator's discretion.

The Contractor shall provide and install all vents required by the treatment plant manufacturer for proper operation of the equipment. Power for the equipment shall be supplied from the 480/208Y/120 volt system.

Compressed air from the compressed air system shall be supplied to the treatment plant in accordance with the manufacturer's recommendations. The Contractor is responsible for all piping, valves, pressure reducers, etc required to connect the compressed air system to the treatment plant.

E. HOLDING TANKS

The sewage holding tank and the gray water holding tank shall be constructed in accordance with contract Clause C320. The sewage holding tank and the gray water holding tank each shall be equipped with a:

- liquid level gauge similar to a KENCO model 9900 series level gauge with integral valves. Each gauge shall be calibrated to show ¼ tank level, the ½ tank level, and the ¾ tank level.

- 2 inch stripping connection to allow the pumping out of each tank at dockside. Each tank's stripping connection shall be fitted at the lowest point of each tank.

- 2-1/2 inch vent. Each vent shall be fitted with a flame screen.

- 1-1/2 inch sounding tube. The sounding tube shall be as straight as practical and located at the lowest part of the tank, where practicable. The sounding tube shall be of the flush mount type, with tee wrench. At the tank bottom there shall be installed a 6 inch x 6 inch striking plate of at least 3/16 inch thickness, seal welded to the tank bottom.

The fire main shall be interconnected to both the sewage holding tank and the gray water holding tank to allow for the flushing of the tanks during stripping operations. The flushing line shall be installed as specified in contract Clause C675.

F. TANK STRIPPING PUMP

The Contractor shall supply and install a stripping pump similar to a MP\Jaeger Pumps, model #2CT trash pump. The pump shall be capable of passing 1-1/2 inch diameter solids, maximum. The pump shall be set up to allow for stripping both the sewage holding tank and the gray water holding tank.

The discharge line from the pump shall terminate at the main deck level, 18 inches above the deck. The deck connection shall be fitted with a bronze screw cap and safety chain. The discharge line shall be clearly labeled for its use.

C669 DRAINAGE SYSTEM

A. DRAWINGS

Contract Drawing #610-B215-01 GENERAL ARRANGEMENT
Reference Drawing #518-D669-01 DRAINAGE SYSTEM

B. DESCRIPTION OF WORK

The Contractor shall provide and install all components, piping, deck drains, and valves necessary to form a complete drainage system. The reference drawing is provided as general guidance for installing the drainage system.

Deck drains shall be installed in the following, approximate, deck locations:

- Pilothouse Deck, aft, port and starboard
- Half Deck (Electrical Plenum), aft, port and starboard
- Texas Deck, forward, port and starboard
- Texas Deck, at Frame #24, port and starboard
- Texas Deck, aft, port and starboard
- Upper Deck, forward, port and starboard
- Upper Deck, at Frame #24, port and starboard
- Upper Deck, at Frame #34, port and starboard
- Upper Deck, at Frame #36, port and starboard
- Upper Deck, at Frame #46, port and starboard
- Upper Deck, at Frame #56, port and starboard
- Upper Deck, aft, port and starboard
- Main Deck, between Frame #36 and Frame #37, port and starboard

The drain lines from the scuppers shall run from deck level down inside the deckhouse where possible to prevent freezing in the winter. The drain lines shall be routed beneath the main deck and exit the hull side at a distance 8 to 12 inches above the waterline.

The drain lines shall be 1-1/2 inch nominal pipe. All deck drains shall be supplied with removable bronze strainer plates similar to BFG model #DK-5015. All overboard discharges for the drains shall be sloped a minimum of ¼ inch per foot. Clean out plugs shall be installed at the locations of the overboard lines.

The drain headers may be combined with other drain headers and run overboard, but the headers shall not be combined with the bilge, HVAC, or sanitary and sewage systems.

C670 VENTS & SOUNDS

A. GENERAL BACKGROUND

Vents and sounds are required for the various piping systems of the contract. The specific requirements for each system are listed in the respective clause for that system.

Other compartments requiring vents and sounds are listed below with their requirements

B. DESCRIPTION OF WORK

A minimum 1-1/2 inch vent and a 1-1/2 inch sounding tube shall be installed for the following voids:

- Fuel Oil Tank Innerbottom
- Port Cooler Void
- Starboard Cooler Void
- Aft, Port Void #1
- Aft, Starboard Void #1
- Aft, Port Void #2
- Aft, Starboard Void #2

Each vent shall terminate by way of a return bend. Vent construction shall be in accordance with all applicable ABS rules.

Each sounding tube shall be run as straight as practicable and be located at the lowest part of each tank. Each sounding tube shall be flush mount type, with tee wrench. Below the sounding tube, at the tank bottom, there shall be a 6 inch x 6 inch striking plate of at least 3/16 inch thickness, seal welded to the tank bottom.

C675 FIRE FIGHTING SYSTEMS

A. CONTRACT DRAWINGS

#610-B205-01 OUTBOARD PROFILE
#610-B215-01 GENERAL ARRANGEMENT
#610-B233-01 PILOTHOUSE DETAILS
#610-B245-01 HOLD & MACHINERY ARRANGEMENT

B. DESCRIPTION OF WORK

The vessel shall be outfitted with fire fighting systems. The fire main shall be used for fighting onboard vessel fires. A fire monitor system shall be installed in order that the vessel can serve as a harbor fireboat. Both systems shall be separate and not interconnected. The Contractor shall prepare calculations to finalize the selection of the equipment, design the systems, and install all equipment.

C. FIRE MAIN

1. General Requirements

The Contractor shall provide and install all components, piping, and valves necessary to form a complete fire main. The fire main shall be arranged through valves to take suction from the sea chests and discharge to the fire stations located throughout the vessel.

2. System Design

The fire main system shall be designed to account for the following:

- The fire pump shall be sized to deliver water simultaneously from the two highest hydrants at a pitot tube pressure of at least 50 psi and a flow rate of at least 80 gpm.
- Set up as a dry system and will only be under pressure during use.

The Contractor shall perform calculations to determine the size of the fire pump and the size of the system's distribution piping. The calculations along with cutsheets of the equipment selected shall be submitted for review and acceptance by the COR prior to the purchase of any equipment by the Contractor.

3. Hydrants

Fire hydrant stations shall be supplied in the approximate locations on the vessel as follows:

- Lower engine room – aft
- Main deck level at Frame #15, port and starboard
- Main deck level at Frame #58, port and starboard
- Upper deck level at Frame #24, port and starboard
- Texas deck level at Frame #22, port and starboard
- Half deck level – aft bulkhead

The actual position and location of the fire stations shall be determined during the Engineering Phase.

A brass angle valve shall be installed at the outlet of each fire hydrant. The outlet of each hydrant shall be in the horizontal position.

4. Fire Pump

The Contractor shall supply and install a fire pump similar to an Ingersoll-Dresser, type D-800. The pump shall be a self-priming, centrifugal pump with bronze impeller. The pump shall be electric drive type, with the pump and motor furnished as a matched set from the pump manufacturer. The motor controller for the pump shall be set-up with low voltage release. See contract Clause C750.

A relief valve shall be provided and installed on the discharge of the fire pump that relieves back to the pump suction. A pressure gauge shall be fitted on the discharge side of the fire pump.

The fire pump shall be capable of starting and stopping from:

- Locally by the fire pump
- The pilothouse console
- The engineer's control room
- Each fire hydrant station

At each start\stop location, pump indication lights shall be installed to indicate that the fire pump is ready for service or running.

5. Fire Hoses, Nozzles & Racks

Each fire station shall be equipped with a single length of 75 feet of fire hose that is in accordance with the standards set forth by the USCG in 46 CFR, subchapter H, subpart 76.10(n). The hoses supplied shall be 1-1/2 inch.

Each fire hose shall be equipped with an USCG approved brass nozzle. The nozzles shall be a combination type, capable of producing either a solid stream or high/low velocity fog.

Hose racks for stowing the 1-1/2 inch hoses shall be installed at each hydrant. The racks shall provide provisions for easy payout of the fire hose. A spanner wrench shall also be provided at each hydrant.

6. Gray Water Holding Tank & Sewage Holding Tank Flushing

The Contractor shall provide and install 1 inch flushing line connections from the fire main to both the sewage holding tank and the gray water holding tank to allow for the flushing of the tanks during stripping operations. See contract Clause C667.

A pressure gauge and a globe valve shall be installed in each flushing line prior to connecting to each tank.

A warning sign shall be posted adjacent to each globe valve used for flushing. The warning sign shall read "AVOID OVER-PRESSURIZING OF THE TANK. OPEN VALVE SLOWLY."

D. FIRE MONITOR SYSTEM

1. System Requirements

The Contractor shall provide and install all components, piping, and valves necessary to form a complete fire monitor system. The system shall be arranged through valves to take suction from the sea chests and discharge to the fire monitors located throughout the vessel. The diesel driven fire pump and engine shall be located in the lower engine room of the vessel in the approximate location shown on the contract drawings.

The system requirements for the fire monitor system are as follows:

- System to be sized to allow for the simultaneous operation of two fire monitors supplied water by a diesel driven fire pump. 150 hp shall be the minimum horsepower of the diesel driving the pump.
- The horsepower of the engine selected shall be sufficient to drive the selected pump at 110% of rated discharge pressure.
- The monitors supplied shall be capable of delivering both water and foam.
- Automatic pressure relief valves shall be installed in the system discharge piping.

The Contractor shall perform calculations to determine the size of the fire pump, the size of the system's distribution piping, the size of the monitors, and the monitor range and height. The calculations along with cutsheets of the equipment selected shall be submitted for review and acceptance by the COR prior to the purchase of any equipment by the Contractor.

2. Monitors

Two fire monitors shall be supplied and installed as shown on the contract drawings. Each monitor shall be manually operated and allow for the delivery of either water or foam.

Each fire monitor shall meet the following requirements:

- ABS approved/certified for FFV, class I.
- Fabricated from stainless steel with a fused epoxy paint finish.
- The swivels/gears shall be made from aluminum-nickel-bronze.

3. Fire Pump Diesel Engine

The Contractor shall supply and install one, marine-type, 4-stroke-cycle, in-line diesel engine of American manufacture. The engine shall be rated to deliver a minimum of 150 hp to drive the fire pump.

The engine shall be provided with the following features and options:

- Manual clutch.
- Set up for battery start with battery stored in a battery box. A battery charger shall be supplied to charge the battery.
- Configured as a closed jacket water cooling system using a keel cooler. Coolant level sensors and gauges to be provided.
- Auxiliary expansion tank and/or larger jacket water pumps if required to handle the cooling system volume.
- A jacketed manifold and dry exhaust system.
- The engine turbocharger and exhaust manifold shall be insulated or jacketed to maintain an outer skin temperature of less than 125 degrees F.
- Supplied with an electric heater.
- The water, lube and fuel lines to all engine connections shall be fitted with USCG and ABS approved flexible connections.
- The engine oil sump shall be fitted with a ball valve and quick disconnect fitting so that oil can be added to or drawn from the sump.
- A steel base frame with drip pan under the engine.
- Mounted on vibration mounts in order to isolate engine vibration. Vibration mounts shall be sized for maximum 20 percent transmissibility.
- Each engine shall be supplied with lifting eyes and mounting support. The Contractor is responsible for supplying suitable foundations for the engine.
- Four sets of manuals shall be supplied for the diesel engine. See contract Clause H16.
- Spare parts in accordance with contract Clause C805.

The engine manufacturer shall provide a local control panel with gauges. The control panel shall be installed, as a minimum, with the following instrumentation and alarms:

- engine hour meter
- engine tachometer
- jacket water temperature gauge
- engine oil pressure gauge
- battery voltmeter
- engine alarms for low lube oil pressure, high jacket water temperature, and low battery voltage.

The engine shall also be configured for automatic shutdown in the case of engine overspeed, high coolant temperature or low oil pressure. All engine alarms and shutdowns shall also be recorded at a panel in the engineer's control room.

4. Pump & Engine Installation

The engine, pump, and all associated equipment shall be installed in strict compliance with the engine and pump manufacturers' recommendations. The installation of engine and pump shall be approved by the respective manufacturer's field representatives.

5. Start-Up

The start-up of the diesel driven fire pump and engine shall be locally by the equipment in the lower engine room. Engine running indicating lights shall be installed in the pilothouse and in the engineer's control room.

6. Foam

A foam skid unit shall be supplied and installed for the fire monitor system. Unit shall be self contained and include foam tank, foam pump, proportioner, control valves, and control console.

Foam to be supplied shall be suitable for fighting fires where the fire fuel is diesel fuel with a closed cup flash point of 125 degrees F.

C677 FIXED FIRE EXTINGUISHING SYSTEM

A. SYSTEM REQUIREMENTS

The Contractor shall provide and install two separate fixed carbon dioxide (CO2) fire extinguishing systems. Each system shall be designed and installed in accordance with the standards set forth by the USCG in 46 CFR, subchapter H, subpart 76.15 – Carbon Dioxide Extinguishing Systems, Details.

One system shall be set up to protect the main engine room. Remote pull stations for this system shall be provided on the main deck at Frame #44, on the port and starboard sides.

The second system shall be set up to protect the generator room. A remote pull station for this system shall be provided on the main deck at Frame #52 on the port side.

B. LOCATION OF CYLINDERS

The CO2 cylinders shall be located in the steering gear room. The cylinders are to be mounted in racks that shall be attached to the deck or bulkhead.

Provisions shall be made for the removal and installation of the cylinders. Weighing bars shall be installed for each rack to allow for the weighing of the cylinders.

C. ALARMS & SHUTDOWNS

Audible alarms shall be provided in the spaces protected that shall automatically sound prior to the discharge of CO2 into the respective space.

A discharge delay of 20 seconds shall be provided in order to allow personnel in these spaces time to evacuate and allow the ventilation system time to wind down. The discharge delay shall not depend on any source of power other than the CO2.

Provisions shall be made for the automatic shutdown of the supply and exhaust ventilation fans for the engine room and generator room. See contract Clause C685.

D. INSTRUCTIONS & WARNINGS

Instructions and warnings shall be posted in accordance with USCG requirements. As a minimum, the following shall be posted:

- At each pull station, clear instructions relating to the operation of the system.
- Warnings of protection at the entrance to the space protected.
- At the entrance to the steering gear room, warning that CO2 is stored in the space.

C678 FIRE DETECTION & ALARM SYSTEM

The Contractor shall provide and install all components, necessary to form a complete electrical fire detection and alarm system. The electrical fire detection and alarm system provided shall meet all applicable USCG, ABS, and NFPA Rules, with all equipment being UL listed. The system shall be installed throughout the main deckhouse as well as in the engineering and machinery spaces, and the forward stores.

The primary power source for the fire detection system shall be the AC electrical system. The secondary power source shall be from a built-in back-up power supply system consisting of two 24 volt DC batteries with battery charger that will provide a minimum of 84 hours of system operation if the AC electrical service is interrupted. Switchover from the primary source to the secondary source shall be automatic.

The detection system shall be designed to give visual alarm signals and sound audible alarms to be heard throughout the vessel when a fire has been detected. If a fire has been detected in any space on the vessel, the fire detection system is integrated to shutdown the HVAC system as well as any ventilation fans or heaters serving the spaces except the fans serving the upper and lower engine room, and the generator room.

The system shall include electric smoke detectors and heat sensors wired to a detection cabinet. The specific detector or sensor used in a space shall be based on the system manufacturer's recommendations for that space.

The main detection cabinet and an alarm panel shall be located in the pilothouse. Remote annunciator units and alarm panels shall be located in the engineer's control room and on the exterior bulkhead at the front end of main deckhouse (Frame #13). The alarm panels shall include indicator lights for each compartment protected. The panels shall include silencing buttons that allow for the audible alarms to be silenced at any panel.

A red indicating light shall be installed on the pilothouse top in order to give a visual signal of the activation of the fire detection system.

C679 FIRE SAFETY EQUIPMENT

A. PORTABLE FIRE EXTINGUISHERS

The Contractor shall supply and install portable fire extinguishers as defined below:

Space	Classification	Number
Pilothouse	B-II or C-II	1
Electronics Room	C-II	1
Texas Deck Passageway	A-II or B-II	1
Crew's Lounge	A-II or B-II	1
Upper Deck Passageway	A-II or B-II	1
Forward Work Area	A-II or B-II	1
Galley/Mess	B-II or C-II	1
Main Deck Passageway	A-II or B-II	1
Upper Engine Room	B-II	2
Switchboard Passageway	C-II	1
Generator Room	B-II	1
Steering Gear Room	B-II	1
Forward Stores	A-II	1
Machinery Space	B-II	1
Lower Engine Room	B-II	2
Shaft Alley	C-II	1

The classification of the extinguishers to be supplied and their mounting locations shall be in accordance with the ABS and USCG Rules.

All extinguishers shall be supplied with racks or holders for mounting.

B. FIRE AXES

Two fire axes shall be provided and installed on the vessel. The axes shall be mounted at the main deck level on the exterior deckhouse bulkhead, approximately at Frame #17, port and starboard.

C. FIRE CONTROL PLAN

The Contractor shall produce a Fire Control Plan in accordance with the ABS River Rules (Part 4, Section 7, paragraph 7.25.10).

The Fire Control Plan shall be submitted for review and approval by the COR during the construction phase. After approval, a laminated copy of the control plan shall be produced for mounting onboard the vessel by the Government.

C685 HEATING, VENTILATION & AIR CONDITIONING

A. CONTRACT DRAWINGS

#610-B215-01 GENERAL ARRANGEMENT
#610-B233-01 PILOTHOUSE DETAILS
#610-B245-01 HOLD & MACHINERY ARRANGEMENT

B. DESCRIPTION OF WORK

The vessel shall be outfitted with heating, air conditioning, and ventilation throughout the various spaces shown on the above drawings. The Contractor shall prepare calculations to finalize the selection of the equipment, design the systems, and install all equipment.

C. CONDITIONED SPACES

The entire deckhouse forward of Frame #36 shall be air conditioned, heated and receive outside ventilation air. The engineer's control room, workshop and passageway, aft between Frame #50 and Frame #57 on the starboard side, shall also be air conditioned, heated and receive outside ventilation air.

1. Load Calculations

The Contractor shall perform heating and cooling load calculations in order to size the air conditioning, heating and ventilation system for the above spaces. The heating and cooling load calculations along with cutsheets of the equipment selected shall be submitted for review and acceptance by the COR prior to the purchase of any equipment by the Contractor.

The heating and cooling loads shall be based on criteria from the SNAME Technical and Research Bulletin Nos. 4-7 and 4-16 and from the ASHRAE Cooling & Heating Load Calculation Manual (GRP 158). Temperature criteria (based on data for Vicksburg, Mississippi) shall be as follows:

- Outside air (cooling): 95 degrees F DB, 75 degrees F WB
- Indoor air (cooling): 75 degrees F DB @ 50% RH
- Indoor air (heating) 70 degrees F
- Outside air (heating) 25 degrees F DB

Outside ventilation air shall be supplied to each conditioned space on the basis of 15 cfm/person. For determining the necessary amount of ventilation air to be supplied to a space, the occupancy of the space may be assumed such that the:

- Pilothouse has two people
- Staterooms have either one, two or four people as marked
- Crew's Lounge has four people
- Ship's Office has two people
- Laundry has one person
- Main deck public head has two people
- Mess Area has ten people
- Galley has three people
- Forward work area has two people
- Engineer's control room has two people
- Engineer's workshop and passageway has two people

The load calculations must also account for the electrical and electronics equipment in the electronics room located on the half deck.

2. System\Equipment Selection

Based on the above load calculations, equipment shall be selected for a ductless split air conditioning similar to the AmericaSeries manufactured by Enviromaster International (EMI). The system supplied shall have the following features:

- Straight cooling system with supplemental electric heat.
- Ability to add outside fresh air.
- Each space shall be fitted with its own air handler/evaporator unit with thermostatic control mounted on the unit and multiple fan speed.
- Multi-zone, allowing for up to four separate evaporators to be connected to a single condensing unit.
- Each evaporator circuit includes an independent compressor, valves, lines, etc with the cabinet and fan only common to each evaporator served by a respective condensing unit.

Based on the heating and cooling calculations performed above the Contractor shall size the appropriate air handlers/evaporators for each space and match the air handlers to the appropriate serving condenser.

The selection of a mounting type (floor, ceiling, or wall) for an air handler/evaporator unit shall be based on minimizing the unit's obtrusiveness in the space it is serving.

Each condensate line from an air handler/evaporator shall be insulated. The condensate line from each air handler/evaporator shall drain together into a common header with the common headers discharging overboard. The condensate drains from the air handlers/evaporators shall not be combined with any other systems' overboard discharge lines.

Non-sweat fiber line shall be used for the condensate lines passing through the bulkheads and the decks.

3. Fire Detection System Interconnection

Each air handler shall be provided with controls linked to the fire detection and alarm system. All of the air handlers shall shutdown with the activation of the fire detection and alarm system. See contract Clause C678.

D. VENTILATION

1. Upper & Lower Engine Room

The Contractor shall provide and install a mechanical supply and exhaust ventilation system for the upper and lower engine room.

a. Ventilation Calculations

The ventilation system shall be designed to:

- provide a minimum of two air changes per minute to the upper and lower engine room or maintain the space temperature at 120 degrees F or below. The larger criteria should be used. It shall be assumed that the outside temperature is 95 degrees F.

- provide positive pressure to the entire space (upper and lower engine room) at all times.

- account for carrying away the radiated heat of both main engines operating at the engines' maximum rating at the same time.

- account for the combustion air requirements of the diesel driven fire pump as well as the radiated heat of the engine operating at its maximum rating.

- supply and carry away the proper amount of air for all other equipment operating in the upper and lower engine room.

The Contractor shall perform calculations to determine the sizes of the supply inlets and exhaust outlets required and the size of the supply and exhaust fans required. The calculations along with cutsheets of the equipment selected shall be submitted for review and acceptance by the COR prior to the purchase of any equipment by the Contractor.

b. Supply Fans

Each supply fan shall be installed in an intake plenum, with one plenum located on the port side and the second plenum located on the starboard side. The plenums shall be located between Frame #48 and Frame #50. Each plenum shall be provided with a removable access plate in the upper room to allow for access from inside the upper engine room to the fans for removal and maintenance purposes.

Each plenum opening in the bulkhead shall be fitted with an automatic, balanced type louver with blade seal and stainless steel insect screen. The plenums shall terminate as low as possible in the lower engine room.

The supply fans provided shall be marine duct axial blowers, similar to Hartzell, series 44 with TEFC, 480 volt AC, three phase motors. The motors and controls shall be two speed. The motor controller for each fan shall be set-up with low voltage release. See contract Clause C750.

c. Exhaust Fans

An exhaust fan shall be provided and mounted, with gaskets, in the aft end of each engine room stack. Each exhaust fan outlet is to be fitted with an automatic balanced type louver with blade seal, and stainless steel insect screen.

The exhaust fans provided shall be marine type duct axial blowers or propeller fans, similar to Hartzell, with TEFC, 480 volt AC, three phase motors. The motors and controls shall be two speed. The motor controller for each fan shall be set-up with low voltage release. See contract Clause C750.

In order to allow for the ease of removing the exhaust stacks with the installed fans, a junction box shall be installed in each stack for the exhaust fan wiring.

d. Fire Suppression System Interconnection

Provisions shall be made for the automatic shutdown of the supply and exhaust ventilation fans and the automatic closure of the louvers of the supply and exhaust ventilation fans for the engine room upon activation of the fixed fire suppression system. See contract Clause C677.

e. Emergency Stop Buttons

The Contractor shall provide and install emergency stop buttons for the supply and exhaust fans exterior of the upper and lower engine room. The stop buttons shall be mounted in a watertight enclosure at Frame #42 on the port side.

2. Generator Room

The Contractor shall provide and install a mechanical supply and exhaust ventilation system for the generator room.

a. Ventilation Calculations

The ventilation system shall be designed to:

- provide a minimum of two air changes per minute to the generator room or maintain the space temperature at 120 degrees F or below. The larger criteria should be used. It shall be assumed that the outside temperature is 95 degrees F.

- provide positive pressure to the entire space (generator room) at all times.

- account for carrying away the radiated heat of both generator sets operating at same time at full load.

- supply and carry away the proper amount of air for all other equipment operating in the generator room.

The Contractor shall perform calculations to determine the size of the supply inlet and exhaust outlet required and the size of the supply fan and exhaust fan required. The calculations along with cutsheets of the equipment selected shall be submitted for review and acceptance by the COR prior to the purchase of any equipment by the Contractor.

b. Supply Fan

The supply fan shall be installed on the upper deck with watertight cowling, between Frame #50 and Frame #52 (the forward, port corner of the generator room). The fan shall be connected to a plenum that terminates the generator room.

The intake on the supply fan shall be fitted with an automatic, balanced type louver with blade seal and stainless steel insect screen. The intake louver shall close automatically upon activation of the fixed fire suppression system.

The supply fan provided shall be a marine duct axial blower, similar to a Hartzell, series 44, with TEFC, 480 volt AC, three phase motor. The motor and controls shall be two speed. The motor controller for the fan shall be set-up with low voltage release. See contract Clause C750.

c. Exhaust Fan

An exhaust fan shall be provided and mounted, with gasket, in the aft end of the generator room stack. The exhaust fan outlet is to be fitted with an automatic balanced type louver with blade seal, and stainless steel insect screen.

The exhaust fan provided shall be a marine type duct axial blower or propeller fan, similar to a Hartzell, with TEFC, 480 volt AC, three phase motor. The motor and controls shall be two speed. The motor controller for the fan shall be set-up with low voltage release. See contract Clause C750.

In order to allow for the ease of removing the exhaust stack with the installed fan, a junction box shall be installed in the stack for the exhaust fan wiring.

d. Fire Suppression System Interconnection

Provisions shall be made for the automatic shutdown of the supply and exhaust ventilation fans and the automatic closure of the louvers of the supply and exhaust ventilation fans for the generator room upon activation of the fixed fire suppression system. See contract Clause C677.

e. Emergency Stop Buttons

The Contractor shall provide and install emergency stop buttons for the supply and exhaust fans exterior of the generator room. The stop buttons shall be mounted in a watertight enclosure at Frame #42.

3. Steering Gear Room

The Contractor shall provide and install a mechanical supply and exhaust ventilation system for the steering gear room.

a. Ventilation Calculations

The ventilation system shall be designed to:

- provide a minimum of one air changes per 5 minutes.
- Supply air for the air compressors.

The Contractor shall perform calculations to determine the size of the supply inlet and mechanical exhaust outlet fan required for the steering gear room. The calculations along with cutsheets of the equipment selected shall be submitted for review and acceptance by the COR prior to the purchase of any equipment by the Contractor.

b. Supply Inlet

A motor operated intake louver shall be installed on the starboard bulkhead. The intake louver shall be gasketed and provided with a stainless steel insect screen.

The louver shall automatically open upon start-up of the exhaust fan.

c. Exhaust Fan

An exhaust fan shall be provided and mounted, with gasket, on the port side bulkhead. It shall be provided with a bug screen and automatic balanced type louvers.

d. Fire Detection System Interconnection

Provisions shall be made for the automatic shutdown of the exhaust ventilation fan and the automatic closure of the supply inlet louver for the steering gear room upon activation of the fire detection system. See contract Clause C678.

e. Emergency Stop Button

The Contractor shall provide and install an emergency stop button for the exhaust fan in a watertight enclosure at Frame #42 on the main deck level.

4. Machinery Space

The Contractor shall provide and install a natural supply inlet and a mechanical exhaust outlet fan for the machinery space.

a. Ventilation Calculations

The ventilation system shall be designed to:

- provide a minimum of one air change per three minutes as per SNAME Technical & Research Bulletin 4-16.

- supply and carry away the proper amount of air for all equipment operating in the machinery space.

The Contractor shall perform calculations to determine the size of the supply inlet and mechanical exhaust outlet fan required for the machinery space. The calculations along with cutsheets of the equipment selected shall be submitted for review and acceptance by the COR prior to the purchase of any equipment by the Contractor.

b. Supply Inlet

A supply plenum shall be built from the machinery space to the main deck level on the starboard side. The plenum shall be watertight with a motor operated intake louver. The intake louver shall be gasketed and provided with a stainless steel insect screen.

The louver shall automatically open upon start-up of the exhaust fan.

c. Exhaust Outlet

An exhaust plenum shall be built from the machinery space to the main deck level on the port side. The plenum shall be watertight, gasketed, and provided with a stainless steel insect screen.

An exhaust fan shall be provided and mounted, with gasket, on the port side machinery space bulkhead. The fan shall be installed with a fan guard.

d. Fire Detection System Interconnection

Provisions shall be made for the automatic shutdown of the exhaust ventilation fan and the automatic closure of the supply inlet louver for the machinery space upon activation of the fire detection system. See contract Clause C678.

e. Emergency Stop Button

The Contractor shall provide and install an emergency stop button for the machinery space exhaust fan in a watertight enclosure at Frame #42 on the main deck level.

5. Engineer's Work Area & Forward Work Area

The Contractor shall provide and install exhaust fans for the engineer's work area (between Frame #55 and Frame #57, aft) and the forward work area (between Frame #13 and Frame #17).

Each space shall be outfitted with a two speed, shutter-mounted exhaust fan similar to a Grainger's stock #2C713. Each fan shall have a 16 inch diameter propeller and shall be provided with wire guards that meet OSHA regulations.

Provisions shall be made for the closure of the shutters and automatic shutdown of the exhaust fans upon activation of the fire detection system. See contract Clause C678.

6. Toilet\Head Space Fans

The Contractor shall provide and install exhaust fans and fan/lights for the head and toilet spaces.

a. Stateroom & Upper Deck Public Heads

Each of these heads shall be outfitted with a commercial duty combination exhaust fan/light similar to a Broan model HD80L. The fan shall be capable of exhausting a minimum of 80 cfm of air from the head space to the outside of the deckhouse. Each exhaust fan shall be supplied from the 120 volt AC system and be on a GFCI-protected branch circuit.

b. Public Head – Main Deck Level

The public head shall be outfitted with an overhead mounted exhaust fan similar to a Broan model 502. The fan shall a 10 inch side discharge fan capable of exhausting a minimum of 270 cfm of air from the space to the outside of the deckhouse. The exhaust fan shall be supplied from the 120 volt AC system and be on a GFCI-protected branch circuit.

c. Fire Detection System Interconnection

Provisions shall be made for the automatic shutdown of the exhaust fans in the stateroom heads, and the upper deck and the main deck public heads upon activation of the fire detection system. See contract Clause C678.

7. Forward Stores & Shaft Alley

The forward stores and shaft alley shall each be provided with a 2 inch vent. Each vent shall run to a minimum height of 18 inches above the main deck, and terminate with a gooseneck fitting. A corrosion-resistant screen shall be installed at the vent terminals. Vent construction shall be in accordance with the ABS Rules.

E. HEATING

The Contractor shall provide and install the following electric heaters

LOCATION	HEATER TYPE	QUANTITY	VOLTAGE
Hold Level:			
Forward Stores	3 kW	2	480, 3∅
Machinery Space	3 kW	2	480, 3∅
Lower Engine Room	5 kW	2	480, 3∅
Shaft Alley	3 kW	2	480, 3∅
Main Deck Level:			
Passageway (Frame #30)	1.5 kW	1	120, 1∅
Upper Engine Room	3 kW	2	480, 3∅
Generator Room	5 kW	1	480, 3∅
Engineer's Work Area	1.5 kW	1	120, 1∅
Steering Gear Room	5 kW	2	480, 3∅
Upper Deck Level:			
Crew's Lounge	1.5 kW	1	120, 1∅
Passageway (Frame #28)	1.5 kW	1	120, 1∅
Texas Deck Level:			
Passageway (Frame #23)	1.5 kW	1	120, 1∅
Pilothouse	1.5 kW	2	120, 1∅

The heaters supplied and installed shall be similar to those available from Grainger. The 1.5 kW heaters are stock #3UG12, the 3 kW heaters are stock #4E299, and the 5 kW heaters are stock #2E582.

The actual position and location of the heaters in the spaces served shall be determined during the Construction Phase.

Provisions shall be made for the automatic shutdown of the heaters through out the vessel upon activation of the fire detection system. See contract Clause C678.

C690 COMPRESSED AIR SYSTEM

A. CONTRACT DRAWING

#610-B245-01 HOLD & MACHINERY ARRANGEMENT

B. DESCRIPTION OF WORK

The Contractor shall provide and install all equipment, components, and piping required for two complete, separate compressed air systems. One system shall be a self-contained system serving the air horn. The second system, ship's service, shall provide:

- Starting air for the main engines. See Clause C605.
- Starting air for one of the diesel generator set engines. See Clause C733.
- Control air for the shaft brakes. See Clause C605.
- Air for the fuel oil system centrifugal separator. See Clause C630.
- Air for the lube oil system centrifugal separator. See Clause C635.
- Service air for the sewage treatment plant. See Clause C667.
- Service air for the air tool stations.
- Blowdown air for the sea chests. See Clause C325.

C. AIR COMPRESSORS

For the starting air\ship's service compressed air system, two, 2-stage air compressors similar to a Westinghouse LeRoi model 550A shall be provided and installed. The compressors provided shall be set up with 7-1/2 hp motors run at 1755 rpm that provide air at 250 psi. The compressors shall be air cooled and each compressor shall be provided with an hour meter.

The compressors shall be mounted in the steering gear room with each compressor mounted on vibration isolaters with a design transmissibility of 20% or less.

The system shall be set up to maintain 225 psi air in the air receivers. Pressure switches shall be provided to cut-in both air compressors when the system pressure drops to 150 psi and cut-out when the system pressure of 225 psi is reached.

D. PIPING & EQUIPMENT

Piping for both compressed air systems shall be seamless black iron, ASTM A106.

A separator/filter with automatic drain shall be provide immediately downstream of the compressors. The drain shall be piped to a drain pan.

Reducing stations shall be supplied and installed to reduce the system air from 225 psi to the pressures required for the air starters, control air for the shaft brakes, service air for the sewage treatment plant, and for the air tool stations. The air tool stations are to be supplied with 100 psig air.

Filters and air dryers shall be installed to condition the control air for the shaft brakes. Types and sizes of filters shall be in accordance with the shaft brake\gear manufacturer's recommendations. See contract Clause C605 for shaft brake requirements.

E. AIR TOOL STATIONS

Air tool stations shall be provided and installed in the following locations:

- Machinery Space
- Lower Engine Room, fore and aft
- Shaft Alley
- Upper Engine Room, fore and aft
- Generator Room
- Steering Gear Room
- Engineer's Work Area
- Main Deckhouse forward, interior work area
- Forward main deck, exterior

Each air tool station shall be equipped with a filter/regulator/lubricator unit rated to operate between 0-125 psig.

F. SEA CHEST BLOWDOWN

A 1 inch line with valves shall be installed from the starting air\ship's service compressed air system to each sea chest. These lines shall be used to blowdown each respective sea chest.

G. AIR RECEIVERS

Two horizontal air receivers, minimum 200 gallon capacity each, rated at not less than 350 psig, shall be provided and installed. A third receiver, as sized by the horn manufacturer shall be supplied for the self-contained air horn system.

All three receivers shall be:

- Constructed and certified in accordance with the ASME Code for Unfired Pressure Vessels. Each receiver shall be stamped and an ASME Certifiicate of Inspection shall be furnished with the receiver.

- The design, fabrication, and testing of the air receivers shall be in accordance with the ABS Rules (which also requires survey at the plant of manufacture for fabrication and testing).

- Supplied with an automatic condensate drain valve to allow for the removal of accumulated oil and water. The valve shall empty into a drain pan located beneath each receiver.

- Provided with a pressure gauge and relief valve.

H. AIR HORN SYSTEM

The Contractor shall supply and install an air compressor and tank unit dedicated to serve the air horn. The compressor and receiver supplied shall be similar to those available from Kahlenberg Brothers. The receiver shall meet the requirements outlined above.

The compressor and receiver shall be installed on the half deck in the electronics room. The air horn compressor shall be supplied power from the 208Y/120 volt AC system. The requirements for the air horn with whistle light shall be in accordance with contract Clause C472 for navigation equipment.

C692 ALARM SYSTEMS

A. REFERENCE DRAWINGS

#518-D692-01 GENERAL ALARM SYSTEM
#518-D692-01 BILGE ALARM SYSTEM

B. GENERAL ALARM SYSTEM

A General Alarm System shall be provided and installed in accordance with USCG regulations. Reference drawing #518-D692-01 is provided for general guidance for designing and installing the system.

Bells shall be installed throughout the vessel as general emergency alarm signals. The tone of the bells shall be different from that of the Fire Detection System. See Clause C678. In addition to the bells, red flashing lights or red rotating beacons shall be installed in areas with high background noise. Lights and bells, shall be installed in the vessel as follows:

- Half Deck (Electronics Room) – bell
- Texas Deck – bell in the passageway
- Upper Deck – bell in the passageway and the Crew's Lounge
- Upper Deck Exterior – bell at the aft end of house at Frame #36
- Main Deck (deckhouse interior, forward of Frame #36) bell and light in the forward work area, bell and light in the galley mess area, and bell in the passageway at Frame #30
- Upper Engine Room – bell and light centrally located
- Engineer's Control Room – bell
- Generator Room – bell and light
- Steering Gear Room – bell and light
- Hold Level – a bell and light in each of the following; Machinery Space, Lower Engine Room, and the Shaft Alley
- Main Deck Exterior – bells at the forward bulkhead of the main deckhouse (Frame #13), and at Frame #40, port and starboard.

A 12 volt DC battery and battery charger shall be provided and installed for the system. For details of the battery and battery charger, see contract Clause C706. The General Alarm panel provided shall be similar to those manufactured by J-Box, Marrero, LA (www.jboxinc.com) and comply with USCG, 46 CFR, subpart 113.25.

The General Alarm bells and lights shall be marked in accordance with contract Clause C461.

C. BILGE ALARM SYSTEM

The Contractor shall provide and install a Bilge Alarm System. Reference drawing #518-D692-02 is provided for general guidance for designing and installing the system.

The system shall be powered directly from the 12 volt DC system.

Bilge level sensors or switches shall be installed in the following voids or compartments below the main deck level:

- Forward Stores
- Fuel Oil Tank Innerbottom
- Machinery Space
- Lower Engine Room
- Port Cooler Void
- Starboard Cooler Void
- Shaft Alley
- Aft, Port Void #1
- Aft, Starboard Void #1
- Aft, Port Void #2
- Aft, Starboard Void #2

The Contractor shall provide and install a monitoring panel with audible and visual alarms in the pilothouse and in the engineer's control room. The monitoring panel in the pilothouse shall be provided with a dimmer switch. The monitoring panels in the pilothouse and the engineer's control room shall be provided with silencing buttons for the audible alarms in the panels.

A yellow indicating light shall be installed on the pilothouse top in order to give a visual signal of the activation of the bilge alarm system.

D. WATERTIGHT DOOR ALARMS

The Contractor shall provide and install a watertight door alarm for each watertight door to indicate that the door is open. An alarm panel with audible and visual alarms shall be installed in the pilothouse and in the engineer's control room. The panel in the pilothouse shall be provided with a dimmer switch. The panels in the pilothouse and the engineer's control room shall be provided with silencing buttons for the audible alarms in the panels.

THIS PAGE INTENTIONALLY LEFT BLANK

C700 ELECTRICAL

C701 GENERAL REQUIREMENTS FOR ELECTRICAL SYSTEMS

An electrical power system shall be provided and installed to provide power for all of the vessel's electrical equipment. The system consists of an AC section and a DC section.

The design, construction and installation of all system components shall be suitable in all respects for marine service and the intended application. All system components shall be furnished new and unused.

The design ambient temperature for all electrical equipment in the engine room and generator room shall be 50 degrees C, and all current carrying conductors shall be copper. The design ambient temperature for motors is defined in contract Clause C750.

Equipment shall be located and oriented as conveniently as practicable for operation and maintenance. All equipment shall be accessible for removal, servicing and adjustment without dismounting or removal of other equipment.

Unless otherwise specified, all machinery, equipment, materials and installation shall be in accordance with all applicable rules, regulations and recommendations contained in the current issue of the publications listed in Clause C003, including any revisions that have been published in the Federal Register prior to the issuance date of this contract.

Where not otherwise specified, all machinery, equipment, materials and installation shall be with applicable IEEE, NEMA, NEC, and ANSI standards and codes. All the equipment furnished shall bear the approval of the Underwriters Laboratories, where applicable. Contract references to specific sections of codes, rules and standards in these specifications are intended to emphasize specific salient items. All equipment and design shall be furnished in compliance with all applicable sections of the codes, rules, and standards cited in Clause C003 and Clause C004.

C702 ELECTRICAL EQUIPMENT & CABLING MARKING

A. DESIGNATION SYSTEM

All designation of circuits, distribution panels, nameplates, etc shall be in accordance with Annex B of IEEE Standard 45 – 2002 edition.

B. EQUIPMENT MARKING REQUIREMENTS

All electrical equipment shall be provided with standard label plates indicating manufacturer, model number, and electrical characteristics (operating voltage, phase, amperage, etc.). The nameplates, serial number plates, identification tags, etc. that are installed on the equipment shall remain in place on the equipment as furnished by suppliers. The Contractor shall use caution during construction to not damage or paint over nameplates or tags. Damaged nameplates or tags shall be replaced prior to Final Acceptance.

The Contractor shall install identification labels for all equipment. All nameplates and notices shall be stamped or engraved on brass or plastic plates. All weather exposed nameplates, notices, and markings shall be of brass.

All distribution panels shall be labeled with designation plates. All breakers in the distribution panels shall be numbered and the panel identification cards filled out to identify the breaker's service. See USCG, 46 CFR, subchapter J, paragraph 111.40-11.

All other controls, gauges, switches, etc., shall be labeled with phenolic label plates to permit operation of the vessel. This includes pilothouse equipment as well.

C. CABLE MARKING

All interconnecting cables and wiring shall be marked at each termination and at each watertight bulkhead or deck with circuit or system identification. Power distribution wiring shall be marked to indicate phase and polarity. All cables shall be suitably identified throughout their length with cable tags identifying the circuit designation.

The tags are to be fabricated from strip aluminum or bronze with raised lettering and shall be securely fastened to the cable by banding.

Cable identification shall be in accordance with the electrical cable schedule developed per contract Clause C725.

D. IDENTIFICATION OF MOTOR CONTROLLERS

Each motor controller and motor control center shall be marked in accordance with USCG, 46 CFR, subchapter J, paragraph 111.70-3(d).

E. SHORE POWER & OFF-VESSEL IDENTIFICATION

The Contractor shall install an identification plate for the shore power receptacle and off-vessel receptacle in accordance with the ABS River Rules (Part 4, Section 4, paragraph 4/4A4.7.5).

An identification plate with similar information shall also be installed for the off-vessel receptacle.

C705 AC ELECTRICAL SYSTEMS

A. PRIMARY POWER SYSTEM

The primary power system to be installed for the vessel shall be rated as a 480 volt AC, 3-phase, 3-wire, 60 Hz, ungrounded system. Power to this system shall be supplied by the generator sets or through shore power.

The generator sets for the primary power system shall be set up for parallel operation.

B. SECONDARY POWER SYSTEM

The secondary power system to be installed for the vessel shall be rated as a 208Y/120 volt AC, 3 phase, 4-wire, 60 Hz, grounded system. Power to this system shall be supplied from the main switchboard through a transformer.

C706 DC ELECTRICAL SYSTEM

A. REFERENCE DRAWING

#603-D720-02 ONE-LINE DIAGRAM (DC)

B. DESCRIPTION OF WORK

The Contractor shall supply and install a 12 volt DC electrical system for the navigation, communication, emergency lighting loads, and the Bilge Alarm System. A reference drawing has been provided for guidance in designing the 12 volt DC system. The system components shall be sized based on the DC Load Analysis calculated per contract Clause C710 and a One Line Diagram (DC) shall be prepared for the system in accordance with contract Clause C720.

The DC system power supply, battery charger, and battery, as well as associated equipment, shall be located in the electronics room on the half deck. The DC system distribution panel shall be located in the pilothouse.

Equipment supplied that requires 24 volt DC power for operation shall be either:

- Connected to the 12 volt DC system via a 12 volt DC to 24 volt DC converter.
- Or installed with its own dedicated power supply.

For reference, systems requiring DC power that are not part of the DC system are the:

- Fire Detection & Alarm System (Clause C678).
- General Alarm System (Clause C692).
- Starting battery systems supplied for one of the diesel generator sets (Clause C733).
- DC control system supplied for the air start diesel generator set (Clause C733).
- Starting battery system supplied for the diesel driven fire pump engine (Clause C675).

C. DC SYSTEM DISTRIBUTION PANEL

A DC distribution panel shall be provided and installed similar to those manufactured by Paneltronics. The DC distribution panel shall include, but not be limited to the following basic components and features:

- Power available light with dimmer switch
- Line voltage meter
- Load current meter

D. BATTERIES & BATTERY CHARGERS

1. Battery Requirements

All batteries provided shall be suitable for marine use and shall be rated for a minimum of 200 ampere-hours.

The Contractor shall provide and install 12 volt DC batteries for the 12 volt DC system and for the General Alarm System. The size of the 12 volt DC system batteries shall be based on the DC Load Analysis performed as required by contract Clause C710. The General Alarm System battery shall be sized in accordance with contract Clause C692.

For the diesel generator sets, the Contractor shall supply and install:

- A 24 volt DC battery bank for starting and DC control for a battery started generator set.

- A 12 volt or 24 volt DC battery, dedicated to the DC control system for the air started generator set. Voltage of the control batteries shall be in accordance with the diesel generator manufacturer's recommendations.

For the starting of the diesel driven fire pump engine, the Contractor shall supply and install a starting battery sized in accordance with the engine manufacturer's recommendations. Charging of the starting battery shall also be accomplished by an engine alternator attached to the fire pump engine.

The batteries for the 12 volt DC system and for the General Alarm System shall be located in the electronics room. The 24 volt DC starting battery bank and the generator DC control system batteries shall be installed in the generator room. The starting battery for the diesel driven fire pump engine shall be located in the lower engine room.

Each battery or set of batteries shall be placed in vented, high density polyethylene boxes with lockable covers.

2. Battery Chargers

For the 12 volt DC system and the General Alarm System, the Contractor shall supply and install a battery charger for each system similar to a La Marche, model A41 series. Each charger supplied shall be USCG listed for marine service and built to carry continuous loads. The battery chargers for the 12 volt DC system and the General Alarm System shall be sized to meet the power requirements for that respective system's batteries. The battery chargers shall be mounted in the electronics room.

For the diesel generator set 24 volt DC starting system, the Contractor shall supply and install a battery charger similar to a La Marche model ESC battery charger. The battery charger for the 24 volt DC starting system shall be sized to meet the power requirements for the generator set diesel engine starting batteries. The battery charger shall be mounted in the generator room and be suitable for operation in 50 degrees C.

For the DC control system for the air started diesel generator set, the Contractor shall supply and install a battery charger similar to a La Marche model A41 series. The battery charger for the DC control system shall be sized to meet the power requirements for the generator DC control batteries as specified by the engine manufacturer. The battery charger shall be mounted in the generator room and be suitable for operation in 50 degrees C.

For the diesel driven fire pump engine, the Contractor shall supply and install a battery charger similar to a La Marche model ESC battery charger. The battery charger for the diesel driven fire pump engine shall be sized to meet the power requirements for the starting batteries as specified by the engine manufacturer. The battery charger shall be mounted in the lower engine room and be suitable for operation in 50 degrees C.

The input voltage for all chargers shall be 120 volt AC, 60 Hz and all chargers shall be supplied with ammeters.

3. Overload & Reverse Current Protection

Overload and reverse current protection for the battery conductors shall be in accordance with USCG, 46 CFR, subchapter J, paragraph 111.15-25.

C710 LOAD ANALYSIS

A. AC LOAD ANALYSIS

The Contractor shall develop a complete load analysis for the 480/208Y/120 volt AC electrical system based on the actual equipment selected for installation. The load analysis should be set up for the following operating conditions:

- Towing – Summer
- Towing – Winter
- In-Port/Shore Power – Summer
- In-Port/Shore Power - Winter

B. DC LOAD ANALYSIS

The Contractor shall develop a complete load analysis for the 24 volt DC and 12 volt DC systems based on the actual equipment selected for installation. Each load analysis should be set up for the following operating conditions:

- Summer – Day
- Winter – Night
- Emergency Condition

C715 FAULT CURRENT & CIRCUIT BREAKER COORDINATION

The Contractor shall prepare a complete detailed fault current analysis and circuit breaker coordination study.

The fault current analysis shall demonstrate that all protective devices such as fuses and circuit breakers have sufficient short circuit breaking and making capacities. A listing of all protective devices, their locations, use, manufacturer, model, and interrupting rating shall be submitted with the fault current analysis.

The circuit breaker coordination study shall demonstrate that only the circuit breaker closest to the fault will open under short circuit conditions.

Copies of time-current characteristics for all breakers involved in the coordination study shall be submitted with the study.

C720 ONE LINE DIAGRAMS

The Contractor shall develop complete AC and DC one line diagrams based on the final equipment selections.

Catalog cutsheets shall be provided for all AC system and DC system components with the submission of the respective system's one line diagram.

C725 CABLING REQUIREMENTS

A. VOLTAGE DROP & CABLE SCHEDULE

The Contractor shall prepare separate cable schedules for all circuits in the AC electrical system and for all circuits in the DC electrical system.

A voltage drop calculation shall be included on each cable schedule for each circuit. For each AC circuit, a 5% maximum voltage drop is allowed from the switchboard to the connected load. For each DC circuit analysis, a 5% maximum voltage drop is allowed from the DC power source to the connected load.

The cable schedules and voltage drop analyses shall be submitted to the COR for review prior to the construction phase.

B. CABLE REQUIREMENTS

Cables shall be similar to L.F. GAUBERT, Specification #474, TNIB Series, 90°C rated, armored, USCG & ABS approved. Armored cables used shall be basket weave armor (bronze jacket) in accordance with IEEE-45 or equivalent (as classified by UL as IEEE-45 equivalent). The armored cable shall be installed grounded at both ends.

The Contractor shall select the size of the cables based on the voltage drop analysis and the current distribution requirements from the one line diagrams. All cables for receptacle circuits shall be 12 AWG or larger.

All wiring shall be clipped and bracketed to provide straight, vertical and horizontal runs throughout the vessel. Care shall be taken to run all power cables separate from all control signal cables in order to avoid field interference.

All cable installations shall be supported on galvanized steel brackets, and shall comply with all applicable provisions of IEEE-45 for cable installation. Cable supports shall be heavy enough to bear the weight of cables without bending, and all supports shall have rough or sharp edges removed so that cable armor will not be damaged. Horizontal runs of cable shall be supported by brackets spaced every 2 feet. Vertical runs of cables shall be supported every 2 feet with individual cable straps and bar hangers or brackets.

Soldering shall be performed only with resin or other neutral flux. Ends of all wires not tinned by the cable manufacturer shall be tinned before securing to terminals or before applying lugs. Solderless lugs shall be used wherever practicable. Terminals or lugs that are to be soldered to cable ends shall first be cleaned and tinned or treated with a neutral flux to ensure a good bond.

Connections to equipment and terminal boards shall be made with compression type connectors.

Ring tongue compression terminals shall be used for all control terminations. Ends of all cables shall be sealed against moisture by taping in combination with insulating compounds or other approved methods.

Cable penetrations throughout non-watertight bulkheads and decks shall have ample bearing surfaces. Cable penetrations through watertight decks or bulkheads shall use multi-cable transits similar to the ROX System or brass or steel stuffing tubes. Multi-cable transits shall be installed with spares to allow for the addition of cables. Enclosure penetrations shall use brass stuffing tubes.

All cables shall be identified in accordance with contract Clause C702.

C730 LIGHTING & RECEPTACLES

A. REFERENCE DRAWING

#603-D720-02 ONE-LINE DIAGRAM (DC)

B. GENERAL REQUIREMENTS

The Contractor shall supply and install complete lighting systems in order to adequately light the vessel. The lighting systems shall consist of:

- Interior Lighting
- Exterior Lighting
- Emergency Lighting
- Floodlights
- Searchlights
- Navigation Lights
- Instrument Lighting

The Contractor shall provide and install convenience receptacles throughout the vessel interior and exterior.

C. INTERIOR & EXTERIOR LIGHTING

All fixtures shall be marine type and made of corrosion resistant materials and shall be spaced evenly to provide proper distribution of light. Fixture installation shall be such that the low point of all fixtures is above the lowest structural members.

All lighting switches shall be marine type, watertight where required by location, and shall be mounted for convenient operation.

The lighting level (measured in foot-candles), shall be in accordance with the guidelines established in the IES Lighting Handbook for Marine Lighting.

1. Interior Lighting

Interior lighting fixtures shall be fluorescent, ceiling mounted or surface mounted fixtures, controlled by a switch at each entrance to the compartment. Fluorescent type lamps shall be rapid start and cool white.

The pilothouse shall also be equipped with three 12 volt DC, twin tube, 8-watt lights with red for night vision underway and white for normal use. The lights shall be similar to a Guest model #836C-3-2R fixture.

The Contractor shall provide and install a fluorescent bunk light at the head of each bed in each stateroom.

For each stateroom and head space, the Contractor shall install:

- A fluorescent light over each mirror.
- A combination exhaust fan/light. See contract Clause C685.

The fluorescent lights installed over the mirrors and the combination fan/lights shall be on GFCI protected circuits.

2. Exterior Lighting

Two types of exterior deck lighting shall be provided and installed in order to provide sufficient lighting on the decks for safe operation at night. The exterior lighting shall be energized from the 120 volt AC system.

Watertight, bulkhead mounted incandescent type fixtures shall be installed along the sides and ends of the deckhouse, on all deck levels. The lights furnished shall be similar to Pauluhn, model 707B. The exterior lighting for each deck level shall be divided into two circuits, port and starboard, with each circuit controlled by a separate switch. The switches for the deck lighting shall be located in the pilothouse.

In addition to the bulkhead mounted fixtures, watertight step lights similar to Pauluhn, model 824S shall be provided and installed along the sides and ends of the deckhouse at the main deck level. The fixtures furnished shall be of the incandescent type and flush mounted in the bulkheads. The step lights shall be divided into two circuits, port and starboard, with each circuit controlled by a separate switch. The switches for the deck lighting shall be located in the pilothouse.

3. Emergency Lighting

The vessel shall be provided with a separate, emergency 12 volt DC lighting system for interior and exterior lighting. The purpose of the system to be installed is to provide lighting for egress to/from the vessel. The emergency lighting is configured to allow for automatic operation upon failure of the AC lighting system or for manual (all-the-time) operation. Reference drawing #603-D720-02 is provided for guidance in designing the system.

For the interior spaces, 12 volt DC twin tube fluorescent fixtures, similar to a Guest model #836C-3 shall be provided and installed. For the exterior and machinery spaces, watertight, 12 volt DC incandescent fixtures shall be installed.

Emergency lighting units of the interior type shall be located as follows:

LOCATION	QUANTITY
Pilothouse	1
Electronics Room	2
Texas Deck Level:	
Passageway	1
Upper Deck Level:	
Lounge	1
Passageway	2
Main Deck Level:	
Galley	1
Mess Area	1
Passageway	2
Forward Work Area	2
Engineer's Control Room	1
Engineer's Work Area	1
Engineer's Passageway	2
Interior Stairwell:	
Each Landing	1

Emergency lighting units of the exterior type shall be located as follows:

LOCATION	QUANTITY
Pilothouse Deck	3
Half Deck	1
Texas Deck	2
Upper Deck	6
Main Deck	9
Upper Engine Room	2
Generator Room	2
Steering Gear Room	2
Forward Stores	1
Machinery Space	2
Lower Engine Room	4
Shaft Alley	1

D. FLOODLIGHTS

Marine rated, 500W quartz\halogen lamp floodlights similar to Phoenix model MS500QH shall be provided and installed on the vessel. The floodlights shall be shock mounted in the following locations:

LOCATION	QUANTITY	DIRECTION FACING
Upper Deck Level:		
Port - aft	1	Aft
Starboard aft	1	Aft
Texas Deck Level:		
Port	2	Port
Starboard	2	Starboard
Port – aft	1	Aft
Starboard – aft	1	Aft
Main Deck Level:		
Port	2	Port
Starboard	2	Starboard
Port – forward	1	Forward
Starboard – forward	1	Forward
Port – aft	1	Aft
Starboard – aft	1	Aft

The floodlights shall be set up on eight circuits:

- Upper Deck Level
- Texas Deck Level - Port
- Texas Deck Level - Starboard
- Texas Deck Level - Aft
- Main Deck Level - Forward
- Main Deck Level – Port
- Main Deck Level - Starboard
- Main Deck Level - Aft

The switches for each circuit shall be located in the pilothouse except for the main deck port, forward and starboard, forward floodlights. The port, forward and the starboard, forward floodlights shall be installed with three way switches that allow for operation from the pilothouse or from inside the deckhouse at the forward main deck work area.

E. SEARCHLIGHTS

The Contractor shall provide and install three 2.5 kW, Xenon searchlights, similar to Carlisle & Finch, set up for 460 volt AC, three phase service.

The searchlights shall be mounted on the pilothouse top, with two lights mounted directly above the steering levers, facing forward. The third searchlight shall be mounted on the aft end of the pilothouse top, facing aft. The foundations for the lights shall be in accordance with Clause C330 of the contract.

The forward searchlights, mounted directly above the console shall be installed with lever-gear control. The aft searchlight shall be installed with distant electric control for operation from the pilothouse console.

The exterior surfaces of each searchlight shall be finished in white enamel. Each searchlight shall be provided with a canvas storage cover.

F. NAVIGATION LIGHTS

The vessel shall be furnished with a complete system of navigation lights in accordance with the USCG Navigation Rules, International and Inland. The vessel will operate on the Western Rivers as well as the Gulf Intracoastal Waterway. See contract Clauses C001 and C003. The navigation lighting system shall also include USCG lights required for a "vessel not under command" and a "vessel restricted in her ability to maneuver".

The navigation lighting system shall be set up for 120 volt AC. All navigation lights provided shall be similar to figures 1164 to 1168 series, manufactured by Perko, except the whistle light provided by the air horn manufacturer (see contract Clause C472).

A supervised, solid-state, navigation light panel shall be supplied similar to those manufactured by J-Box, Marrero, LA (www.jboxinc.com) and installed in the pilothouse. The navigation light panel supplied shall include "tell-tale" panel alarms to indicate the failure of the lights primary bulb and indicate that the secondary bulb is in operation. The panel shall also incorporate circuits for the anchor light and the whistle light, and a panel dimmer switch.

G. INSTRUMENT LIGHTING

All instrument lights and gauges on the console in the pilothouse shall be provided with lights. The lights shall have dimmer switches.

H. EQUIPMENT & CONVENIENCE RECEPTACLES

1. Equipment Connections & Receptacles

The swing meter, pilothouse refrigerator/freezer, crew's lounge TV and DVD\VCR, galley equipment, ice machines, washer, and dryer shall all be installed on dedicated circuits, with non-GFCI receptacles and breakers, unless required by the equipment manufacturer. Where equipment is supplied with plugs, the Contractor shall install a dedicated, single receptacle for each different equipment's service. The voltage and phase required for each piece of equipment is dependent upon the equipment selected.

2. Interior Convenience Receptacles

All interior convenience receptacles shall be rated for 2 pole, 3 wire, 15 amp or 20 amp, 125 volt AC service. All receptacles, including GFCI receptacles, shall be hospital and/or industrial/institutional grade receptacles similar to those manufactured by Hubbell.

The receptacles listed below may be grouped on circuits with other receptacles serving the same space or area except that each galley counter top receptacle shall be installed on separate, dedicated circuits.

The following receptacles shall be furnished and installed for the vessel:

Location	Type	Rating	Other
Pilothouse			
Port	Duplex	15 amp	
Starboard	Duplex	15 amp	
Aft	Duplex	15 amp	
Counter-top	Duplex	20 amp	GFCI Receptacle
Half Deck (Electronics Room)			
Aft Bulkhead	Duplex	20 amp	
Port Bulkhead	Duplex	20 amp	
Starboard Bulkhead	Duplex	20 amp	
Staterooms (per each room)			
Near Desk	Duplex	20 amp	
On a bulkhead	Duplex	15 amp	
Adjacent to mirrors	Duplex	15 amp	GFCI Receptacle
Passageways			
Texas Deck Bulkhead	Duplex	20 amp	
Upper Deck Bulkhead	Duplex	20 amp	
Main Deck Bulkhead	Duplex	20 amp	
Captain's Stateroom			
Near Desk	Duplex	20 amp	
Port Bulkhead	Duplex	15 amp	
Captain's Head			
Adjacent to mirror	Duplex	15 amp	GFCI Receptacle
Crew's Lounge			
Near Desk			
Forward Bulkhead	Duplex	15 amp	
Aft Bulkhead	Duplex	15 amp	
Upper Deck Public Head			
Adjacent to mirror	Duplex	15 amp	GFCI Receptacle
Ship's Office			
Counter-top Forward	Duplex	20 amp	
Counter-top Aft	Duplex	20 amp	
Port Bulkhead	Duplex	15 amp	

Location	Type	Rating	Other
Laundry Room	Duplex	15 amp	GFCI Receptacle
Main Deck Public Head			
Adjacent to mirror	Duplex	15 amp	GFCI Receptacle
Starboard Bulkhead	Duplex	20 amp	GFCI Receptacle
Chief Engineer's Stateroom			
Near Desk	Duplex	20 amp	
On a bulkhead	Duplex	15 amp	
Adjacent to mirror (head)	Duplex	15 amp	GFCI Receptacle
Main Deck Interior Forward			
Utility Area Bulkhead	Duplex	20 amp	GFCI Receptacle
Work Area – Fwd Bulkhd	Duplex	20 amp	
Work Area – Aft Bulkhd	Duplex	20 amp	
Mess Area			
Forward Bulkhd – Floor	Duplex	20 amp	GFCI Receptacle
TV Service – Fwd, High	Single	20 amp	Separate Circuit
Pantry Bulkhead	Duplex	20 amp	GFCI Receptacle
Galley			
Counter Top Level	Duplex	20 amp	GFCI Receptacles
Supply Total = 4			Separate Circuits
Engineer's Control Room			
Counter Top Level	Duplex	20 amp	
Aft Bulkhead	Duplex	20 amp	
Engineer's Work Area			
Forward Bulkhead	Duplex	20 amp	
Aft Bulkhead, Port	Duplex	20 amp	
Aft Bulkhead, Stbd	Duplex	20 amp	
Generator Room	Duplex	20 amp	GFCI Protected
Steering Gear Room			
Port Bulkhead	Duplex	20 amp	
Starboard Bulkhead	Duplex	20 amp	

3. Exterior & Waterproof Receptacles

All exterior and waterproof receptacles supplied shall be rated for 2 pole, 3 wire, 20 amp, 125 volt AC service. All receptacles supplied shall be similar to Pauluhn, model #2584B-125. GFCI circuit breakers shall be installed for the circuits serving the receptacles listed below.

The following waterproof receptacles shall be furnished and installed for the vessel:

Location	Type	Circuit Rating
Exterior		
Main Deck Forward	Duplex	20 amp
Main Deck Aft	Duplex	20 amp
Main Deck Port - Forward	Duplex	20 amp
Main Deck Port – Aft	Duplex	20 amp
Main Deck Stbd – Forward	Duplex	20 amp
Main Deck Stbd – Aft	Duplex	20 amp
Upper Deck Port	Duplex	20 amp
Upper Deck Stbd	Duplex	20 amp
Upper Deck Aft	Duplex	20 amp
Upper Deck – Frame #56	Duplex	20 amp
Texas Deck Port	Duplex	20 amp
Texas Deck Starboard	Duplex	20 amp
Texas Deck Aft	Duplex	20 amp
Half Deck Aft	Duplex	20 amp
Pilothouse Stbd	Duplex	20 amp
Pilothouse Port	Duplex	20 amp
Pilothouse Aft	Duplex	20 amp
Forward Stores	Duplex	20 amp
Machinery Space		
Port Bulkhead	Duplex	20 amp
Stbd Bulkhead	Duplex	20 amp
Aft Bulkhead	Duplex	20 amp

The following waterproof receptacles shall be furnished and installed for the vessel:

Location	Type	Circuit Rating
Lower Engine Room		
Forward Bulkhead	Duplex	20 amp
Aft Bulkhead	Duplex	20 amp
Port Bulkhead	Duplex	20 amp
Stbd Bulkhead	Duplex	20 amp
Shaft Alley	Duplex	20 amp

The receptacles may be grouped on circuits with other receptacles serving the same space or area. All receptacles shall be located a minimum of 3 feet above the deck or sole plating.

C733 ELECTRICAL POWER PLANT

A. CONTRACT DRAWING

#610-B215-01 GENERAL ARRANGEMENT

B. DIESEL GENERATOR SET REQUIREMENTS

The Contractor shall provide and install two identical diesel generator sets as located on contract drawing #610-B215-01.

The diesel generator sets shall be a 4 stroke-cycle marine type, meeting ABS rules. Each diesel generator shall have a continuous rating of not less than 190 kW at 0.8 power factor at 60 Hz and 1800 rpm. The generators shall be set up to supply 480 volt AC, 3-phase, 3-wire, ungrounded, 60 Hz electrical power.

Each generator shall be equipped with an amortisseur winding and shall be capable of delivering 110 percent load for two hours without exceeding permissible limits of temperature rise. Each generator, along with its regulation and excitation systems shall be capable of supporting overload conditions as well as maintaining short circuit currents of such magnitude and duration as required to properly actuate selective tripping of downstream protective devices.

Each voltage regulator shall be a solid state volts-per-hertz voltage regulator and shall be capable of automatically maintaining constant rated generator voltage throughout the load range of the generator. Each voltage regulator shall be capable of maintaining steady state regulation within 1 percent of rated voltage from no load condition to 110 percent rated load condition and shall include a voltage adjusting rheostat with a plus and minus 10 percent adjustment range.

The voltage dip on each generator shall not exceed 25 percent while starting the largest motor on the vessel across-the-line with the main bus load at 30 percent capacity.

Each diesel engine and generator shall be provided with the following features and options:

- Approved by ABS.
- Voltage droop on each generator that is adjustable for parallel operation.
- A drip proof, guarded enclosure, and shall be air cooled and self-ventilated.
- A brushless excitation system and an automatic solid state voltage regulator.
- An engine mounted fuel pump with a minimum lift of 10 feet.
- One diesel engine and generator set up for air start and the second diesel engine and generator set up for battery start.
- Dedicated DC control system for the air start diesel genset, including dedicated batteries and chargers for controls and automatic shutdowns.
- Throttle control and governor.
- Emergency stop pushbutton.
- Turbocharged-aftercooled.
- Configured as a closed jacket water cooling system using keel coolers. Coolant level sensors and gauges to be provided.
- Auxiliary expansion tanks and/or larger jacket water pumps if required to handle the cooling system volume.
- A jacketed manifold and dry exhaust system.
- Each engine turbocharger and exhaust manifold shall be insulated or jacketed to maintain an outer skin temperature of less than 125 degrees F.
- Each engine shall be equipped with a crankcase vent filter/collector system similar to a NELSON EcoVent Recirculator. The EcoVent shall be supplied with a manometer and the drain line shall be returned directly to the engine oil sump, below the oil level.

- Each generator shall be supplied with an electric heater.
- The water, lube and fuel lines to all engine connections shall be fitted with USCG and ABS approved flexible connections.
- Each diesel engine oil sump shall be fitted with a ball valve and quick disconnect fitting so that oil can be added to or drawn from the sumps.
- A steel base frame with drip pan under the engine.
- Mounted on vibration mounts in order to isolate engine vibration. See contract Clause C180 for noise and vibration requirements.
- Each engine shall be supplied with lifting eyes and mounting support. The Contractor is responsible for supplying suitable foundations for the engines and generators.
- Switchgear controls and instrumentation shall be provided and installed as outlined in contract Clause C740.
- Load bank testing of the diesel engine and generator shall be in accordance with Section E of the contract.
- Four sets of manuals shall be supplied for the diesel engines and generator sets. See contract Clause H16.
- Spare parts in accordance with contract Clause C805.

The diesel engines and generator sets and all associated equipment shall be installed in strict compliance with the engine manufacturer's recommendations and the installation shall be approved by the manufacturer's field representative.

C. DIESEL ENGINE COMBUSTION AIR

Each generator diesel engine shall be fitted with a dedicated source of outside air for combustion. The combustion inlet shall be protected from rain and shall be fitted with a bug screen. Provisions shall be made for closing the inlet in case of a fire.

D. GENERATOR SET STARTING/STOPPING

Each generator set shall be set up for starting and stopping locally, at the generator set in the generator room.

One diesel engine shall be set up for air start. Air starting motors to be supplied by the engine manufacturer. Air starting motors shall be of the oil-less type. The air start generator set shall also be supplied with a dedicated battery system for a DC control system. See Clause C706.

The second diesel engine shall be provided with its own dedicated, electric start. The electric starting system shall be 24 volt DC including starter motor, batteries, battery charging alternator, ammeter, and regulator. See Clause C706.

The starting batteries shall be marine, heavy duty, rated in accordance with the engine manufacturer's recommendations. The Contractor shall provide and install a battery box with cover for the diesel engine starting batteries. The battery box shall be located in the generator room.

E. GENERATOR SET INSTRUMENTATION & ALARMS

The diesel generator sets shall be set up to automatically shutdown upon activation of the following alarms:

- engine overspeed
- low lube oil pressure
- high jacket water temperature

Alarms shall be provided for each generator set. The alarm panels shall be located both in the generator room and in the engineer's control room. The panels shall be set up such that silencing an alarm at one panel automatically silences the alarm at a second panel.

The alarms shall have both audible and visual signals at both the generator room panel and at the engineer's control room panel. The alarms shall be provided with fault light lock-in circuitry, lockout of additional alarm lights after engine shutoff, alarm silence buttons, and circuit test buttons.

The following alarms shall be included for each generator set at both the generator room panel and the engineer's control room panel:

- engine overspeed
- low lube oil pressure
- high jacket water temperature
- low starting air pressure
- low starting battery voltage

The diesel generator manufacturer shall provide a local control panel, with mechanical gauges, installed at each generator set. Each panel shall have, as a minimum, the following instrumentation:

- engine hour meter
- jacket water temperature gauge (degrees F)
- lube oil pressure gauge (psi)
- fuel pressure gauge (psi)
- tachometer
- amp meter
- volt meter
- watt meter
- frequency meter

An instrument panel shall be provided and installed for each generator set in the engineer's control room. The following instrumentation shall be included on the panel:

- generator power available light
- jacket water temperature gauge
- lube oil pressure gauge

The following instrumentation and alarms shall be installed in the pilothouse for each generator set:

- generator set running light
- generator trouble light and audible alarm

The diesel generator trouble alarm shall be provided with fault light lock-in circuitry, lockout of additional alarm lights after engine shutoff, and alarm silence button. The instrument panel installed in the pilothouse shall be furnished with lights and dimmer switches.

C740 SWITCHBOARD & POWER CONTROL

A. CONTRACT DRAWING

#610-B215-01 GENERAL ARRANGEMENT

B. OVERVIEW

A switchboard shall be provided and installed for the electrical systems and shall be located as shown on contract drawing #610-B215-01. Front layouts, catalog cutsheets of major components, and diagrams of the switchboard shall be submitted for review by the COR prior to the purchase of the switchboard by the Contractor.

The switchboard shall be configured to contain:

- A generator control section
- A shore power section
- A 480 volt AC distribution section
- All equipment (circuit breakers, etc) designed for an ambient temperature of 50 degrees C.

The generator control section shall enable paralleling of the generator sets. The switchboard shall also be configured to prevent paralleling between the shore power and either generator set.

The switchboard shall be designed, constructed, and installed in accordance with ABS rules.

C. SWITCHBOARD REQUIREMENTS

1. General Requirements

The switchboard shall be front and rear accessible. The switchboard shall also be fully serviceable from both the front and rear. It shall be freestanding and adequately supported to resist vibration. The switchboard shall be set up to provide for top and bottom cable entry.

Space heaters for the switchboard sections shall be provided to prevent condensation within the enclosure during idle periods. The space heaters shall be energized from the ship's service 208Y/120 volt AC system. A space heater switches with indicating lights shall be incorporated into the switchboard.

2. Generator Set Switchboard Sections (Parallel Operation)

The switchboard shall include sections for monitoring and control of each generator set as well as a synchronizing section for paralleling of the generator sets. For each generator set, the associated switchboard section shall include the following components and features:

- Automatic synchronizer.
- "AUTO-MANUAL" synchronizer selector switch.
- Generator power available indicating light.
- Voltage regulator control rheostat.
- Speed control rheostat.
- Voltmeter and selector switch.
- Ammeter and selector switch.
- Frequency meter.
- Wattmeter.
- Multifunctional Amp transducer.
- Multifunctional Volt transducer.
- Multifunctional Watt transducer.
- Frequency transducer.
- Manual "ON-OFF" switch with indicating light for the switchboard space heater.
- "ON-OFF-AUTO" switch with indicating light for the associated generator space heater. When in the "AUTO" position, the space heater shall be energized whenever the associated generator breaker is open.

The synchronizing section of the switchboard shall include the following components:

- Synchroscope.
- Selector switch to select the incoming generator.
- Generator breaker "CLOSE" pushbutton for the each generator.
- Speed control rheostat for each generator.
- One voltmeter for each generator.
- One frequency meter for each generator.

An automatic synchronizer shall be provided for each generator that will automatically synchronize the incoming generator, as selected by the generator selector switch, with the 480 volt AC bus and close the generator breaker when the two power sources are synchronized. Automatic synchronization, breaker closing and load balancing, shall occur:

a) When the breaker close pushbutton is pressed and the synchronizer selector switch is in the "LOCAL AUTO" position.

b) When the synchronizer selector switch is in the "REMOTE AUTO" position.

When in the "MANUAL" position, pushing the close pushbutton will by-pass the automatic synchronizer and close the breaker of the selected generator.

Each generator breaker shall be provided with reverse power protection that will trip the generator under reverse power conditions. The setting shall be between 8% and 15% of the main generator rating. Each generator breaker shall also be interlocked such that the generator breaker cannot be closed unless its associated generator is generating power. Each generator breaker shall also open if its associated generator voltage collapses.

3. Shore Power Operation – Switchboard Section

The switchboard shall include a section for monitoring the incoming shore power. The shore power section of the switchboard shall include the following components and features:

- Shore power available indicating light.
- Voltmeter.
- Ammeter.
- Frequency meter.
- Phase sequence/loss system.

The phase sequence/loss system for the shore power connection consists of:

- A phase sensing relay with correct phase light (green), neutral position, and incorrect phase (red)
- Shore power reversed phase indicating light.
- Three-position shore power phase reversal switch with "normal" and "reversed" settings separated by an "OFF" switch position.

To prevent paralleling between the shore power and the generator sets, electrical and mechanical (safe/run device for the shore power service) interlocking shall be provided. The main bus shall only be energized at any given time by the generator sets or the shore power.

4. Isolation Ground Bus & Ground Detection

The switchboard shall incorporate an isolation ground bus. Connections shall be made from the AC system distribution panels back to the isolation ground bus in the switchboard. Grounding shall then be made to the starboard diesel generator engine.

For ground detection, the switchboard shall also include:

- Ground detection lights, ammeter and test switch for the 480 volt AC system.
- Ground detection lights, ammeter and test switch for the 208Y/120 volt AC system.

5. Switchboard Breakers

a. General Circuit Breaker Requirements

The interrupting rating of each circuit breaker shall be suitable for the maximum short circuit current available at the point of application as determined by short circuit analysis. The circuit breakers provided shall have a minimum interrupting rating of 10,000A RMS symmetrical at their respective voltage level, and shall be capable of interrupting without damage, the maximum fault current at the breaker from the system.

Circuit breaker coordination and selectivity shall be provided so that, for a fault on any part of the system, the protective device that is closest to the point of fault without tripping upstream breakers (in accordance with USCG, 46 CFR, subchapter J, subpart 111.51) clears the fault.

b. Generator Sets & Shore Power Sections

The generator breakers shall be provided with adjustable time delay under voltage trip devices. The generator and shore power breakers shall be provided with trip characteristics to provide maximum selective coordination with downstream circuit breakers and motor operations.

The switchboard shall contain molded case, electronic trip device circuit breakers for the generators, and for the shore power service.

The main section of the switchboard shall contain, as a minimum, the breakers for the generator sets, the shore power (two breakers), the off-vessel power service, the transformer feed, the steering and flanking gear motors, the feeds to the 480 volt AC distribution section. There also should be two spare breakers in this section.

c. 480 Volt Distribution Section

Molded case, draw-out type, circuit breakers shall be provided for all of the equipment required for control of the 480 volt, three-phase, 60 Hz equipment, and for the 480 volt AC distribution system.

The 480 volt distribution bus circuit breakers shall be manually operated and provided with inverse time, ambient-temperature-compensated, thermal magnetic trips and shall have interchangeable thermal trip units and adjustable magnetic trips in ratings where available.

As a minimum, four spare breakers shall be provided. The spare breakers shall have trip ratings representative of the trip ratings furnished for other loads connected to the main switchboard.

Any remaining "spaces" for circuit breakers shall be fitted with plug-in assemblies of appropriate frame size and blank cover plates.

Single phase loads shall be distributed as evenly as possible among the three phases of the three-phase, 4-wire system, to achieve optimum phase current balance.

C745 DISTRIBUTION PANELS

A. DESCRIPTION OF WORK

Power and lighting distribution panels shall be used to supplement the distribution section of the switchboard for all of the electrical loads on the vessel. Distribution panels shall be located so that they are readily accessible.

The distribution panels shall be dead front circuit breaker type equipped with molded case circuit breakers. All distribution panels shall be fitted with isolation ground bars.

All distribution panels shall be equipped with main circuit breakers for the feed into the distribution panel.

All circuit breakers installed in distribution panels located in the upper and lower engine room, and the generator room shall be rated for 50 degrees C.

All distribution panels and breakers shall be marked in accordance with contract Clause C702.

B. AC SYSTEM CIRCUIT BREAKERS

The distribution panels shall be connected to feeder circuit breakers in the 480 volt main switchboard as well as to the 480 volt to 208Y/120 volt transformer feed.

As far as practicable, load distribution should be such that the distribution panels shall feed electrical loads that are located in their respective areas.

Single phase loads shall be distributed as evenly as possible among the three phases of the three phase, 4-wire system, to achieve optimum phase current balance.

The distribution panels shall be equipped with molded case circuit breakers with ratings and the number of poles to satisfy system requirements. The 208Y/120 volt AC distribution panels shall be similar to Square D. Stab (plug in) type circuit breakers shall be used.

The circuit breakers in all the distribution panels shall have quick make, quick break, trip-free mechanism. The interrupting rating of each circuit breaker shall be suitable for the maximum short circuit current available at the point of application as determined by short circuit analysis. The circuit breakers provided shall have a minimum interrupting rating of 10,000 RMS symmetrical amperes at their respective voltage levels, and shall be capable of interrupting without damage to the fault current available at the breaker from the system.

In addition, each of the distribution panels shall be provided with a minimum of four spare breakers, with trip ratings representative of trip ratings furnished for other loads.

Circuit breakers for the motor controllers shall be in accordance with contract Clause C750. Breakers for the transformer shall be in accordance with contract Clause C755.

C. DC SYSTEM CIRCUIT BREAKERS

The DC system distribution panels and circuit breakers shall be in accordance with contract Clause C706.

C750 MOTORS & CONTROLLERS

A. MOTORS

All motors shall be drip-proof protected, except those exposed to the weather, which shall be of waterproof construction. All motors shall be NEMA type, and shall be sized and designed for continuous operation of the driven auxiliary at rated capacity.

All motors shall be designed for an ambient temperature of 50 degrees C.

All motors shall be equipped with anti-friction bearings. All motors using grease lubricated bearings shall be provided with grease fittings and shall have positive means for preventing grease from being forced out upon the motor windings.

B. CONTROLLERS

All controllers shall have manually reset thermal overload protection, line disconnect device, and integral start/stop push-button set. Controllers arranged for automatic or remote operation shall also be provided with Hand-Auto or Local-Remote selector switch. Exterior mounted controllers shall be mounted in watertight enclosures.

Controllers for the small hp motors shall be full-voltage magnetically operated types. In cases where starting motors across the line can produce 25% voltage dip on the system with the bus at 30% capacity, reduced voltage starters shall be used.

C. MOTOR CONTROLLER – BREAKER COORDINATION CIRCUITS

Switchboard breakers and distribution panel breakers for motors and motor controllers shall be sized and installed in accordance with the following:

- Motor feeder circuit breakers installed in a switchboard section or motor panel shall be rated near to and not more than 250% of the motor FLA.
- The motor control circuits shall be in accordance with MDC Sketch #750A.
- All motor controllers shall have short circuit and ground fault protection by circuit breaker rated at AT = 125% FLA and IT =10 x FLA of the motor.
- See MDC Sketch #750B for the motor circuit logic.

D. MOTOR UNDER-VOLTAGE PROTECTION

All motor controllers shall be provided protection against an under-voltage condition. Protection against under-voltage shall be either low-voltage protection (LVP) or low-voltage release (LVR).

The motor controllers for the following systems shall be provided and installed with low-voltage release (LVR):

- Steering gear pumps
- Bilge pumps
- Fire main pump
- Air compressors
- Engine room supply and exhaust fans
- Generator room supply and exhaust fans

All motor controllers not having LVR shall be provided and installed with low-voltage protection (LVP) unless the motor is less than 2 hp.

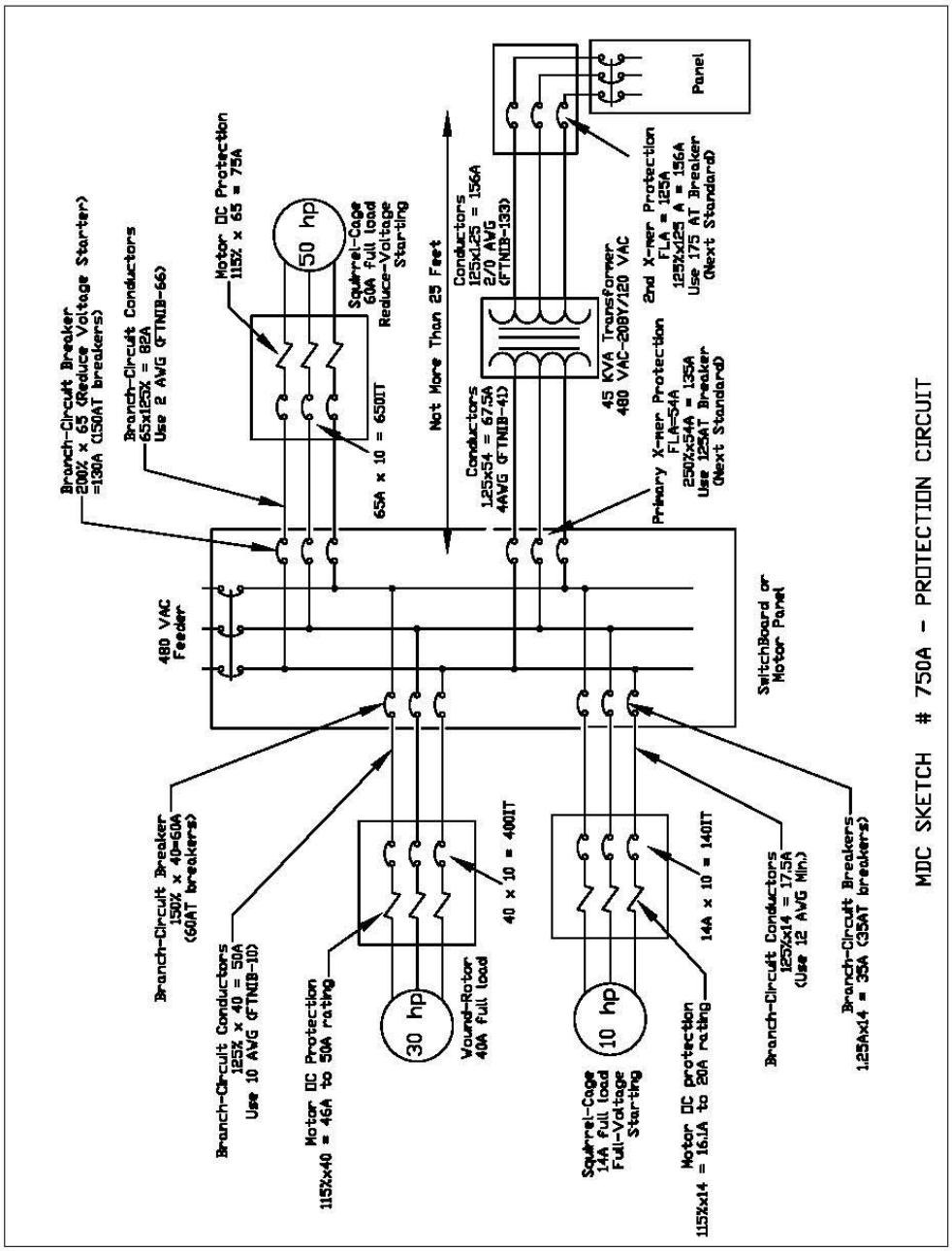
Branch-Circuit Breaker
200% x 65 (Reduce Voltage Starter)
=130A (150AT breakers)
Branch-Circuit Conductors
65x125% = 82A
Use 2 AWG (FTNIB-66)
Motor OC Protection
115% x 65 = 75A
50 hp
Squirrel-Cage
60A full load
Reduce-Voltage
Starting
65A x 10 = 650IT
Not More Than 25 Feet
Conductors
125x54 = 67.5A
4AWG (FTNIB-41)
Conductors
125x1.25 = 156A
2/0 AWG
(FTNIB-133)
45 KVA Transformer
480 VAC-208Y/120 VAC
Primary X-mer Protection
FLA=54A
250%x54A = 135A
Use 125AT Breaker
(Next Standard)
2nd X-mer Protection
FLA = 125A
125%x125 A = 156A
Use 175 AT Breaker
(Next Standard)
Panel
480 VAC
Feeder
SwitchBoard or
Motor Panel
Branch-Circuit Breaker
150% x 40=60A
(60AT breakers)
Branch-Circuit Conductors
125% x 40 = 50A
Use 10 AWG (FTNIB-10)
Motor OC Protection
115%x40 = 46A to 50A rating
30 hp
Wound-Rotor
40A full load
40 x 10 = 400IT
Squirrel-Cage
14A full load
Full-Voltage
Starting
10 hp
Motor OC protection
115%x14 = 16.1A to 20A rating
14A x 10 = 140IT
Branch-Circuit Conductors
125%x14 = 17.5A
(Use 12 AWG Min.)
Branch-Circuit Breakers
1.25Ax14 = 35A (35AT breakers)
MDC SKETCH # 750A - PROTECTION CIRCUIT

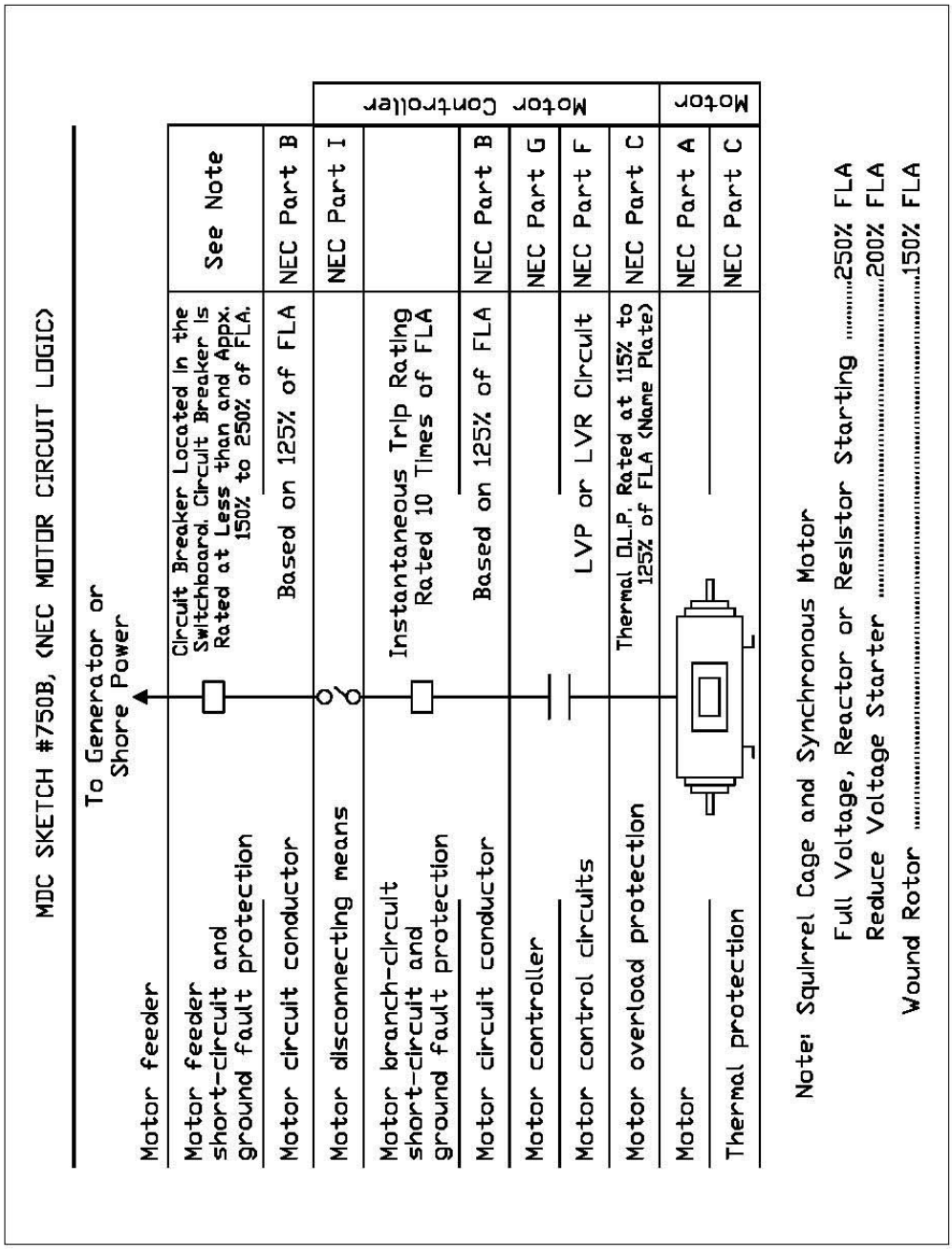
MDC SKETCH #750B, (NEC MOTOR CIRCUIT LOGIC)
To Generator or Shore Power
Motor feeder
Motor feeder short-circuit and ground fault protection
Circuit Breaker Located in the Switchboard. Circuit Breaker Is Rated at Less than and Appx. 150% to 250% of FLA.
See Note
Motor circuit conductor
Based on 125% of FLA
NEC Part B
Motor disconnecting means
NEC Part I
Motor branch-circuit short-circuit and ground fault protection
Instantaneous Trip Rating Rated 10 Times of FLA
Motor circuit conductor
Based on 125% of FLA
NEC Part B
Motor controller
NEC Part G
Motor control circuits
LVP or LVR Circuit
NEC Part F
Motor overload protection
Thermal O.L.P. Rated at 115% to 125% of FLA (Name Plate)
NEC Part C
Motor
NEC Part A
Thermal protection
NEC Part C
Motor Controller
Motor
Note: Squirrel Cage and Synchronous Motor
Full Voltage, Reactor or Resistor Starting .....250% FLA
Reduce Voltage Starter .....200% FLA
Wound Rotor .....150% FLA

C755 TRANSFORMERS

A. TRANSFORMER SIZING REQUIREMENTS

The Contractor shall provide and install one transformer to connect the 480 volt AC, three phase, 3-wire, 60 Hz system to the 208Y/120 volt AC, three phase, 4 wire, 60 Hz system.

The transformer shall be sized based on the results of the AC load analysis and the development of the AC one line diagram. See contract Clauses C710 and C720.

B. GENERAL REQUIREMENTS

The transformer shall be three phase, 60 Hz, marine dry type, convection air cooled and shall be adequately sized to satisfy system requirements.

The secondary system shall be bonded at the transformer.

The transformer selected shall be suitable for exterior mounting with the transformer being mounted on the aft upper deck, above the switchboard. The Contractor is responsible for providing a foundation beneath the transformer.

C. INSULATION

The transformer shall have class H insulation and copper conductors. The design ambient temperature shall be a minimum of 50 degrees C. The transformer shall be designed to deliver rated KVA continuously without the benefit of internal fans to circulate air. All insulating materials shall be in accordance with NEMA standards.

Provisions shall be made to completely isolate the core and coil from the enclosure. There should be no metal-to-metal contact. Rubber vibration isolating pads shall be installed by the manufacturer between the core and the enclosure. The core should then be visibly grounded to the enclosure by means of a flexible grounding conductor.

D. CONSTRUCTION

The enclosure shall be constructed of heavy gauge sheet steel, shall be drip-proof, and shall be given a suitable corrosion resisting treatment. The entire assembly shall be rigid self-supporting construction. Panels shall be capable of being readily open or removed for access to interior for installation, maintenance, and repair.

E. TRANSFORMER CIRCUIT BREAKERS

The transformer feeder circuit breaker shall be sized to be near to but not more than 250% of the primary current. The secondary transformer circuit breaker shall be rated or sized at 125% or the next standard size of circuit breaker. See MDC Sketch #750A.

C760 SHORE POWER SERVICE

The towboat shall be set up to accept 480 volt AC, three phase, 200 amp shore power service.

The Contractor shall provide and install two reverse service (inlet angle junction box), shore power (load making, load breaking) receptacles on the vessel. The use of this type of receptacle and plug shall allow the shore power circuit breaker to remain closed in the event of low voltage or loss of power from shore.

The reverse service receptacles to be supplied for the vessel shall each be similar to a MELTRIC, model #MB20212MA20-39-28243-A09. The corresponding connectors to be supplied for use with the receptacles shall be similar to a MELTRIC, model #31-211-39-24243-A09.

The Contractor shall also provide 100 feet of 4-conductor shore power cable for 200 amp service. One end of the cable shall be fitted with the MELTRIC connector for use on the vessel. The second end of the cable shall be set up for use on the shore side and shall be fitted with a Government furnished connector to match the shore side service.

One shore power receptacle shall be located on the forward main deckhouse bulkhead (Frame #13) and the second shore power receptacle shall be located on the aft bulkhead of the deckhouse (Frame #69).

The shore power receptacles shall be labeled for operation in accordance with contract Clause C702.

C765 OFF-VESSEL SERVICE

The towboat shall be set up to provide off-vessel power service. The service to be provided is 480 volt AC, 200 amp, three phase power.

The Contractor shall provide and install an off-vessel power receptacle on the inboard side of the port towknee.

The receptacle provided shall be similar to a Load Breaking MELTRIC model #MB202-MA20-39-24243-A09, rated for 480 volt, 200 amp, 3-pole, 4-wire service. The off-vessel service shall be fed through a circuit breaker mounted in the main switchboard.

The Contractor shall also provide a 50 foot length and a 100 foot length of 4 conductor power cable for the off-vessel service. One end of each cable shall be fitted with a plug similar to a Load Breaking MELTRIC Male Plug, model #31-211-39-28243-A09 and the other end of each cable shall be fitted with a Government furnished connector to match the off-vessel receptacle.

The off-vessel receptacle shall be labeled for operation in accordance with contract Clause C702.

THIS PAGE INTENTIONALLY LEFT BLANK

OPTIONAL LINE ITEM 0001AD FLOATING DECKHOUSE & NOISE CRITERIA

The following requirements shall be incorporated into the contract upon the exercising of optional line item 0001AD.

C115 WEIGHT ESTIMATE & CG CONTROL

The Contractor shall also provide a separate document detailing the weights and centers of gravity for the floating deckhouse. The document shall be submitted for Government review and acceptance, prior to the selection and arrangement of the isolator spring supports for the deckhouse. The format for this weight estimate shall be similar to that prepared for the entire vessel. However, the floating deckhouse weights shall be subtotaled for each level of the deckhouse.

The Contractor shall maintain an updated weight estimate for the floating deckhouse during the Engineering Phase and a revised (lightship) weight estimate shall be submitted to MDC at the conclusion of the Engineering Phase.

C180 NOISE & VIBRATION

A. GENERAL REQUIREMENTS

Upon the exercise of optional line item 0001AD, the requirements listed below will replace those listed in Clause C180 above.

Control of noise and vibration are paramount to the functionality of this vessel. Every effort shall be made to control noise and vibration. The Contractor shall be responsible for any corrective action necessary to reduce excessive noise to the levels described below.

The deckhouse forward of the upper machinery space (Frame #36) shall be segregated from the hull and deckhouse aft.

B. VIBRATION CRITERIA

See contract Clause C313, Floating Deckhouse Design for requirements.

C. NOISE CRITERIA

The following noise levels shall not be exceeded within a given space:

HULL LEVEL

Forward Stores	80 dB(A)
Machinery Space	80 dB(A)
Lower Engine Room	110 dB(A)
Shaft Alley	80 dB(A)

MAIN DECK LEVEL

Upper Engine Room	110 dB(A)
Generator Room	110 dB(A)
Steering Gear Room	80 dB(A)
Engineer's Control Room	75 dB(A)
Exterior Deck	75 dB(A)

DECKHOUSE

Galley	75 dB(A)
Mess	65 dB(A)
Crew's Lounge	65 dB(A)
Ship's Office	65 dB(A)
Staterooms	60 dB(A)
Pilothouse	65 dB(A)

D. NOISE & VIBRATION CONTROL FOR FLOATING DECKHOUSE

Some control measures that shall be considered to meet the criteria are as follows:

- Effective noise barrier around high noise spaces to prevent noise transmission to adjacent spaces, and sound absorbing material around high noise spaces, to reduce contribution of reverberant noise within the space.

- Installing vibration isolators for the diesel generators and all rotating machinery such as pumps and fans in order to reduce noise and vibration transmission through the structure.

- Flexible mounting of ventilation and other service lines.

- Ensuring that all pipe and duct joints are tight and that all penetrations through spaces are sealed.

- Use of low noise components, e.g. tighter tolerances.

- Ensure that the impedance of the foundation supporting the resilient mount is 10 times the impedance of the resilient mount.

- Ensure that the forcing frequencies are not within +/- 25% of the foundation natural frequencies.

- Ensure that the resilient mount/vibration isolator natural frequencies are not greater than 50% of the forcing frequencies.

- All diesel exhaust lines and exhaust silencers shall be mounted using vibration isolators.

- Installing acoustic louvers on all engine and generator room ventilation openings.

C215 GENERAL ARRANGEMENTS

A. CONTRACT DRAWINGS

#610-B205-01 OUTBOARD PROFILE
#610-B215-01 GENERAL ARRANGEMENT
#610-B301-02 INBOARD PROFILE

B. DESCRITION OF WORK

Upon the exercise of optional line item 0001AD, the deckhouse shall be arranged to include a partial deck at the main deck level to enclose the forward deckhouse dampening system (deckhouse spring void).

C313 FLOATING DECKHOUSE DESIGN

A. DRAWINGS

Contract Drawing #610-B301-02 INBOARD PROFILE
Reference Drawing #556-B313-01 SPRING ISOLATION DETAILS

B. DESCRIPTION OF WORK

The deckhouse forward of Frame #36 shall be installed as a floating house as shown on contract drawing #610-B301-02. The deckhouse shall be mounted on vibration isolators to reduce vibration and noise transmitted from the hull to the deckhouse.

The structural framework of the floating deckhouse shall be designed to efficiently direct the deckhouse weight and dynamic loading to the spring supports.

As part of the Detailed Design, the Contractor shall perform calculations to select the vibration isolators and design the supporting foundations and structure for the floating house.

C. DECKHOUSE WEIGHT ESTIMATE

The Contractor shall prepare a detailed weight estimate of the floating deckhouse in accordance with the requirements listed in contract Clause C115 for optional line item 0001AD. The detailed weight and center of gravity estimate shall be submitted for Government review and acceptance.

Upon the Government's acceptance of the detailed weight and center of gravity estimate, the Contractor shall then determine the vibration isolator size(s), number and arrangement in order to properly isolate and support the deckhouse.

D. DESIGN CALCULATIONS

The Contractor shall perform calculations for the isolator selection as well as to analyze and design the isolator pedestal and supporting hull and floating deckhouse structure. These calculations shall be submitted to the Government for review and acceptance. The calculations submitted shall be neat and contain all assumptions, design methodologies, references, and formulas.

E. LOADING & VIBRATION CRITERIA

The Contractor shall consider the following loading and vibration criteria for arrangement and selection of the vibration isolators:

1. Loading Criteria

Deadweight, based upon the greater of the following:

- The results of the detailed weight and center of gravity estimate.
- Uniform loading corresponding to "h" values defined in the ABS River Rules (Part 3, Section 6 - Towboats) multiplied by a standard cargo density of 45 lbs per cubic foot, applied to all decks including pilothouse top, and deckhouse structure weight.

Combined effect of deadweight and basic wind speed of 100 miles per hour, in any direction, for the vessel docking in the Lower Mississippi River region.

Combined effect of deadweight and dynamic loads. The Contractor shall be responsible for the determination of the appropriate dynamic loads for the vessel.

2. Vibration Criteria

The forcing frequencies shall not be within +/- 25% of the floating deckhouse structure natural frequencies.

The isolator natural frequencies are not greater than 50% of the forcing frequencies.

The maximum vibration levels occurring in the three individual translation axes (longitudinal, transverse and vertical) and combined multi-axis vibration levels shall not exceed the maximum weighted root-mean-square acceleration levels shown for the notation "HAB+" presented in Section 3, Table 1 of the ABS Guide for Crew Habitability on Ships (issued December 2001).

F. ISOLATOR ARRANGEMENT & SELECTION

Based on the above criteria, the isolators shall be located so that the deckhouse is level (parallel to the plane of the main deck) under static loading conditions. Isolators shall also be located so that they are placed directly over and directly under deckhouse and hull framing or bulkhead structure. Complete or partial mounting of isolators on plate panels is not acceptable. Isolator arrangement shall allow for alignment of isolator housings in longitudinal and transverse directions, in order to provide resistance in both directions.

The isolators selected shall be similar to the BXL series, all-directional restrained spring isolators for floor mounting, available from Vibration Eliminator Co., Inc., Copiague, NY (POC – Mr. John Dessi, Tel. 631-841-4000).

Isolators supplied shall be provided with limit stops to prevent collapse of the isolator/deckhouse system, as a result of impact loads from grounding or collision.

The isolators supplied shall be galvanized using the zinc electroplating process and then painted with a marine grade coating, to prevent corrosion.

G. ISOLATOR FOUNDATIONS & INSTALLATION

The Contractor shall be responsible for providing isolator pedestals, and hull and deckhouse structure, that are capable of withstanding the applied loads. The design of the pedestals, hull and deckhouse structure in way of the isolators shall meet the allowable stress criteria defined in the American Institute of Steel Construction (AISC) Allowable Stress Design (ASD) Manual, Ninth Edition, in addition to the requirements of the ABS River Rules.

Insert plates shall be provided on the hull and deckhouse in way of the isolators. See contract Clause C305 for insert plate requirements.

Isolators shall be mounted on stiffened plate pedestal structures similar to those shown on reference drawing #556-B313-01 in order to provide the required height for the void space between the floating deckhouse and the main deck. In lieu of the vertical chocks shown as part #6 on the reference drawing, a flanged tee sections shall be used to provide greater support of the free end of the bolting flange. The angle of the flared side shall not exceed 60 degrees. The width of the pedestal base plate shall be increased to accommodate the wider tee section stiffeners.

The isolating springs shall be secured to the pedestal and the deckhouse in accordance with the manufacturer's recommendations. Reference drawing #556-B313-01 is provided for installation guidance.

The Contractor shall adjust the isolator deflections after installation, to ensure that the isolator loads are equalized. The Contractor shall provide all materials required to achieve the isolator adjustments.

H. DECKHOUSE BOOT & GASKET

The Contractor shall supply and install a neoprene boot around the base of the floating deckhouse. The boot shall be similar to that shown on reference drawing #556-B313-01.

The Contractor shall supply and install a gasket between the interface of the floating (forward) deckhouse and the non-floating (after) deckhouse.

Both the boot and the gasket shall be weathertight.

C315 DECKHOUSE

A. CONTRACT DRAWINGS

#610-B205-01 OUTBOARD PROFILE
#610-B215-01 GENERAL ARRANGEMENT
#610-B233-01 PILOTHOUSE DETAILS
#610-B301-02 INBOARD PROFILE

B. DESCRIPTION OF WORK

Upon the exercising of optional line item 0001AD, the Contractor shall design and construct a steel deckhouse meeting the requirements of the ABS River Rules (Part 3, Section 6.17) and the dynamic loads resultant from the floating deckhouse (see contract Clause 313). The deckhouse shall be installed on the main deck of vessel as shown on the contract drawings.

The deckhouse shall be divided into floating and non-floating sections. The deckhouse, aft of Frame #36, is the non-floating section. The deckhouse forward of Frame #36, is the floating section.

The floating section shall be designed and constructed on a system of vibration isolating springs. The forward deckhouse must be physically disconnected from the aft deckhouse while maintaining the appearance of being a single structure. To that end, the plane where the two structures meet shall be weathertight while allowing the forward deckhouse to move.

If optional line item 0001AD is exercised, the floating deckhouse shall be designed, constructed and installed on the vessel and the maximum air-draft for the vessel shall be 44’-9” with a hull draft of 8’-3”. No permanent structure or equipment shall extend beyond this height.

C326 TRANSDUCER WELLS

The vessel shall be provided with two transducer wells as described above.

Should the transducer wells terminate under the floating deckhouse, provisions shall be made for providing access through the floating deck to allow for removal of each transducer from within the deckhouse.

C406 COATING SYSTEM

If optional line item 0001AD is exercised, all steel surfaces in the deckhouse spring void shall be coated with a base coat at 8 mils DFT minimum.

C410 HULL OUTFIT

G. ROPE GUARD

A rounded steel plate with a rounded corner edge shall be installed vertically at each forward corner of the deckhouse. The plate shall extend from the main deck up 30 inches and be structurally supported to withstand a 1 inch wire rope running against it from any deck equipment. The plate shall be of welded construction and not interfere with the movement of the floating deckhouse.

C415 DOORS, WINDOWS, HATCHES & MANHOLES

C. DOORS

3. Interior Doors

Sound Lock: The doors for the sound lock (at Frame #36 and Frame #37) shall be 36 inches wide by 80 inches in height, hinged to open as shown on the contract drawings. Each door shall be fire rated and fumetight, fitted with a 12 inch by 12 inch fire window. The doors shall all be provided with automatic closures and 2 inch sills.

C425 WALKWAYS, RAILINGS, GRATINGS & FLOOR PLATES

A 30 inch high walkway shall be installed between the upper engine forward bulkhead (Frame #37) and aft bulkhead of the floating deckhouse (Frame #36) at the main deck level. Along the walkway, a two tier pipe railing shall be provided and installed.

The railings and stanchions shall be 1-1/4 inch IPS pipe. One railing shall be 42 inches above the deck and second railing shall be 20 inches above the deck. The railings and stanchions shall be fabricated to be removable, set on 6 inch high bar stubs, welded to the deck. The stanchions shall be pinned to the stubs with 3/8 inch diameter, hex head stainless steel bolts with nylon plug lock nuts.

C436 INSULATION & SHEATHING

A. TREATED AREAS

Spaces Located Above the Main Deck Level

Insulation and sheathing shall be provided and installed for the following spaces:

- All exterior deckhouse bulkheads and overheads (including the bulkheads at Frame #36 and Frame #37).
- The underside of the floating deckhouse (deckhouse spring void overhead).

B. INSULATION REQUIREMENTS

Insulation requirements shall be in accordance with contract clause C436 as stated above in the main contract.

C. SHEATHING REQUIREMENTS

Sheathing requirements shall be in accordance with contract clause C436 as stated above in the main contract.

14 gage perforated aluminum sheets, unpainted, with a minimum of 30% open area shall be installed in the underside of the floating deckhouse (deckhouse spring void overhead).

C601 GENERAL REQUIREMENTS FOR PIPING SYSTEMS & MACHINERY

H. FLOATING DECKHOUSE PIPING FLEXIBILITY

All piping traversing between the main deck and the floating deckhouse, and the after deckhouse and the floating deckhouse, shall be designed and installed with adequate flexibility to account for the movement of the floating deckhouse.

C665 POTABLE WATER SYSTEM

The Contractor shall install the piping for the potable water system with flexible connections where it transitions from the floating deckhouse into the hull or aft deckhouse. Care shall be taken to insure that the piping does not freeze in the spring void beneath the floating deckhouse.

C667 SANITARY & SEWAGE SYSTEM

The Contractor shall install the piping for the sewage and sanitary system with flexible connections where it transitions from the floating deckhouse into the hull or aft deckhouse. Care shall be taken to insure that the piping does not freeze in the spring void beneath the floating deckhouse.

C725 CABLING REQUIREMENTS

All electrical cabling traversing between the main deck and the floating deckhouse, and the after deckhouse and the floating deckhouse, shall be designed and installed with adequate flexibility to account for the movement of the floating deckhouse.

THIS PAGE INTENTIONALLY LEFT BLANK

OPTIONAL LINE ITEM 0001AE SPARE PARTS

C800 SPARE PARTS

C805 MAJOR EQUIPMENT

The following spare parts shall be furnished for the vessel:

A. PROPULSION EQUIPMENT

Description	Quantity	Packaging
Propeller – Left Hand	1	OUTSIDE
Propeller – Right Hand	1	OUTSIDE
Interchangeable Propeller Shafts	1 shaft/set	OUTSIDE
With a set of		
Keys		PROTECTED
Propeller Nuts		PROTECTED
Steering Rudders (Interchangeable)	2	OUTSIDE
Flanking Rudders (Interchangeable)	2	OUTSIDE
Steering Rudder Cylinder	1	PROTECTED
Flanking Rudder Cylinder	1	PROTECTED
Engine Equipment		
Main Engine Air Starting Motor	1	PROTECTED
Genset Air Starting Motor	1	PROTECTED

B. FILTERS

Description	Quantity	Packaging
Main Engine Filters:		
Air Cleaner Elements	1 case	CONSUMABLE
Fuel Oil	1 case	CONSUMABLE
Lube Oil	1 case	CONSUMABLE
Crankcase Vent Filter Elements	1 case	CONSUMABLE
RACOR Filter Elements	1 case	CONSUMABLE
Marine Transmission Filters	1 case	CONSUMABLE
Steering Hydraulics	1 case	CONSUMABLE
Diesel Generator Engine Filters:		
Air Cleaner Elements	1 case	CONSUMABLE
Fuel Oil	1 case	CONSUMABLE
Lube Oil	1 case	CONSUMABLE
Crankcase Vent Filter Elements	1 case	CONSUMABLE
RACOR Filter Elements	1 case	CONSUMABLE
Diesel Driven Fire Pump Engine Filters:		
Air Cleaner Elements	1 case	CONSUMABLE
Fuel Oil	1 case	CONSUMABLE
Lube Oil	1 case	CONSUMABLE
Crankcase Vent Filter Elements	1 case	CONSUMABLE
RACOR Filter Elements	1 case	CONSUMABLE

Refer to Section D of the contract for packing and marking of spare parts.

B. FILTERS

Description	Quantity	Packaging
Main Engine Filters:		
Air Cleaner Elements	1 case	CONSUMABLE
Fuel Oil	1 case	CONSUMABLE
Lube Oil	1 case	CONSUMABLE
Crankcase Vent Filter Elements	1 case	CONSUMABLE
RACOR Filter Elements	1 case	CONSUMABLE
Marine Transmission Filters	1 case	CONSUMABLE
Steering Hydraulic Filters	1 case	CONSUMABLE
Diesel Generator Engine Filters:		
Air Cleaner Elements	1 case	CONSUMABLE
Fuel Oil	1 case	CONSUMABLE
Lube Oil	1 case	CONSUMABLE
Crankcase Vent Filter Elements	1 case	CONSUMABLE
RACOR Filter Elements	1 case	CONSUMABLE

C. MISCELLANEOUS

Description	Quantity	Packaging
Window Wipers:		
One spare wiper blade shall be provided For each pilothouse window wiper	1 per window	CONSUMABLE

Refer to Section D of the contract for packing and marking of spare parts.

C810 OTHER EQUIPMENT

The following spare parts and materials shall be furnished for the vessel:

Description	Quantity	Packaging
Window Wipers: One spare wiper blade shall be provided For each pilothouse window wiper	1 per window	CONSUMABLE
Searchlight Bulbs	3 bulbs	CONSUMABLE
Navigation Light Bulbs	1 case	CONSUMABLE
Ice Machine Water Filters	1 case	CONSUMABLE

Refer to Section D of the contract for packing and marking of spare parts.

THIS PAGE INTENTIONALLY LEFT BLANK

PART I - THE SCHEDULE - SECTION D
PACKAGING AND MARKING

TABLE OF CONTENTS

CLAUSE PAGE

D01 PACKAGING 2

D02 MARKING 3

PART I - THE SCHEDULE - SECTION D
PACKAGING AND MARKING

D01 PACKAGING

All spare parts shall be packaged by the Contractor for delivery and storage.

All spare parts shall be placed aboard the vessel, or loaded on Contractor-furnished trucks by the Contractor after they have been packaged and marked by the Contractor in accordance with the requirements of this section.

Spare parts and materials are divided into two types based on their manner of long-term storage. All spares and materials shall be preserved for either long term "outside" storage or packaged for long term "protected" storage.

"Consumables" such as bulbs, filters, paint and hardware shall be stored aboard the vessel and do not need to be marked in accordance with Clause D02.

"OUTSIDE" Storage spare parts and materials are intended to be stored for extended (two to five years) periods of time outdoors. These parts will be preserved with a paint or other preservative coating acceptable to the manufacturer and the COR; all threaded parts will be coated or filled with preservative and plastic pipe caps or plugs inserted.

"OUTSIDE" spare parts shall be fitted with Contractor furnished pallets, or fixtures to raise them off the ground during storage and provide a lifting rig for moving them by crane, forklift and truck.

"PROTECTED" Storage spare parts are intended to be stored for extended (two to five years) periods of time in unheated warehouses.

"PROTECTED" Storage spare parts shall be coated with paint and other preservative coating systems as recommended by the manufacturer and acceptable to the COR and packaged for mechanical and physical protection as accepted by the Contracting Officer's Representative.

D02 MARKING

All spare parts and materials shall be marked or labeled by the Contractor.

All "OUTSIDE" spare parts and materials shall be marked with a stencil, in paint of a contrasting color, in at least three places, with letters not less than 3-inches high, with the following information:

VESSEL NAME
CONTRACT NUMBER
NAME OF PART (COMPLETED BY THE CONTRACTOR)
DRAWING REFERENCE (COMPLETED BY THE CONTRACTOR)
MANUFACTURER (COMPLETED BY THE CONTRACTOR)
YEAR OF MANUFACTURE (COMPLETED BY THE CONTRACTOR)
OTHER IDENTIFYING INFORMATION

Alternately, the preceding identification information may be cast into or "written" on the piece in welding electrode in at least two places with letters not less than 1-inch high. The identification information shall be cast into all steel castings provided by the Contractor.

All "PROTECTED" spare parts and equipment shall be fitted with a plastic nametag, engraved plastic nameplate or other device acceptable to the Contracting Officer's Representative with the following information completed by the Contractor:

NAME OF PART & PART NUMBER
VESSEL NAME
CONTRACT NUMBER
NAME OF EQUIPMENT OF WHICH ITEM IS A PART
DRAWING REFERENCE
MANUFACTURER
YEAR OF MANUFACTURE
OTHER IDENTIFYING INFORMATION

THIS PAGE INTENTIONALLY LEFT BLANK

PART I - THE SCHEDULE - SECTION E
INSPECTION AND ACCEPTANCE

TABLE OF CONTENTS

CLAUSE PAGE

E01 INSPECTION 2

E02 LAUNCHING 2

E03 QUALITY CONTROL & INSPECTION 3

E04 FACILITIES & SUPPLIES FOR PERSONNEL 5

E05 TRIALS, TESTS & DEMONSTRATIONS 6

E06 FINAL INSPECTION 44

E07 PROVISIONAL ACCEPTANCE 44

E08 FINAL ACCEPTANCE 45

E09 COMMERCIAL WARRANTY OF SUPPLIES 45

PART I - THE SCHEDULE - SECTION E
INSPECTION AND ACCEPTANCE

E01 INSPECTION

The contract will be managed by the Marine Design Center (MDC) of the U.S. Army Corps of Engineers (USACE) and is subject to inspection by its appointed representatives to ensure strict compliance with the terms of the contract. No Government Representative, except the Contracting Officer, is authorized to change any provision of the specifications, nor shall the presence or absence of a Government Representative relieve the Contractor from any requirements of the contract.

The Contractor shall provide "Safe for Workers" labels, in accordance with the OSHA regulations stated in 29 CFR 1915.11-12, for all confined and enclosed spaces prior to permitting entrance for work or inspection. This procedure shall be reflected in the Contractor's Safety Plan (see Section H, Clause H07).

Entry shall not be permitted to any confined or enclosed space that does not have a current "Safe for Workers" label.

E02 LAUNCHING

The Contractor shall be responsible for the satisfactory launching of the vessel at the time and date selected and mutually agreed upon by the Contractor and the COR.

The Contractor shall provide a written notice to the COR 7 calendar days prior to the launching. Prior to launching, all painting below the main deck other than minor interior touch up must be completed. The Contractor shall schedule 3 days between hull inspection and launch to allow any new paint on the hull interior and exterior to cure properly.

The condition of the vessel shall be recorded at the time of launch. This shall include the levels of all tanks, draft and freeboard readings at the port and starboard forward, midship, and aft locations, a list of shipyard equipment on board, an estimate percent of the vessel complete, and the time and date of the launch.

After launching, all tanks and voids shall be inspected for damage and leaks, and their conditions shall be recorded.

E03 QUALITY CONTROL & INSPECTION

A. GENERAL

After Notice To Proceed with Phase II - Engineering & Scheduling, the Contractor shall develop a Contractor Quality Control (CQC) and Inspection Program for the work required in this contract. This program shall contain two sub-programs that will provide for:

- review and quality control of the engineering and scheduling submittals.
- regular inspection and testing of the construction work in progress.
- the preparation and maintenance of documentation and records.

The first sub-program, (CQC of the engineering phase), must be submitted within 14 calendar days after the Notice To Proceed with Phase II - Engineering & Scheduling of the contract.

The second sub-program, (CQC of the construction phase), must be submitted and accepted in the prior to the completion of Phase II of the contract. The Notice To Proceed with Phase III - Construct, Test, and Deliver will not be issued until this document is accepted.

The documentation and records of sub-program 1 shall:

- Define the review and correction process for all Phase II - Engineering and Scheduling submittals with particular attention given to the Detailed Design drawings.

The documentation and records of sub-program 2 shall:

- Define Contractor tests and inspections to be accomplished for each work item of the contract.
- Be commensurate with the complexity of the work in the specification and adequate to assure the Contractor that the product or subproduct offered conforms to the requirements of the contract.
- Be available to the Government Representative at all times and contain recorded data of all Contractor conducted inspections and tests conducted to date. All Quality Control reports, including those of subcontractors and regulatory agencies will be maintained and included as part of the Test Report (see Clause E05).
- List by name and title, the Contractor's representatives who are authorized to witness or perform and sign for each test and inspection.

The following are the minimum requirements for data to be recorded:

Type of inspection or test (e.g., visual, mechanical, liquid penetrant, radiographic), accept/reject criteria, and a statement as to whether the inspection was satisfactory or unsatisfactory.

Number and type of deficiencies of material or workmanship found in the product or subproduct inspected and corrective action taken to correct the deficiencies and, for repetitive deficiencies, to preclude recurrence.

Date and signature of the Authorized Contractor Representative who witnessed or performed the test or inspection.

Responsible authorized personnel shall inspect the work in progress and all completed work, conduct necessary tests and record the data required. An Authorized Contractor Representative shall sign the records attesting to the validity of the information.

Contractor certified inspection is an integral part of all work, therefore the COR will consider the entire contract incomplete if Contractor documentation and records signed by the Contractor's Authorized Representative are not complete.

B. SUBCONTRACTORS

Work subcontracted and/or performed away from the shipyard is covered by this inspection system. The prime Contractor cannot delegate the authority to witness or perform, and sign for tests and inspections conducted away from the shipyard, without approval of the COR.

If the subcontractor has an established Quality Control program with designated organization and personnel, the prime Contractor may designate an appropriate individual in that organization as his authorized representative. Such designation shall clearly indicate that the individual is an employee of a subcontractor and his appointment shall be subject to the approval of the COR.

C. TESTING

When any workmanship, material, or apparatus fails to pass any test or inspection, it shall be fully retested only after all known faults have been eliminated. Where directed by the COR, such failed material or apparatus shall be completely removed from the work and renewed. Any defects in workmanship or material shall be remedied by the Contractor at no additional cost to the Government, except where work was performed on material furnished by the Government.

E04 FACILITIES & SUPPLIES FOR PERSONNEL

While it is not intended that the Marine Design Center will have a Resident Engineer's Office, the Contractor shall provide office space for use by a MDC staff of three during visits to the shipyard.

The office space shall be convenient to the work site.

The space provided shall be air conditioned, heated, ventilated, well maintained and secured, and shall be convenient to toilet facilities. The space shall be suitable for both male and female staff.

Government representatives attending the construction may bring with them radios for intra-agency communication, cameras, and various items of test equipment. Th Contractor shall permit unencumbered ingress and egress to and from the shipyard and vessel with such equipment.

Upon request, the Government representatives shall have unrestricted use of a fax machine, and photocopier.

The Contractor shall furnish an up-to date set of drawings for exclusive use of USACE personnel.

E05 TRIALS, TESTS & DEMONSTRATIONS

A. GENERAL REQUIREMENTS

1. Levels of Testing

The Contractor shall perform tests on all equipment, machinery, and systems; individually, and integrated as a whole. The tests shall be performed as necessary to demonstrate satisfactory compliance with the Specification requirements contained in Section C, "DESCRIPTION/SPECIFICATION/WORK STATEMENT," of this contract.

The Contractor shall perform five levels of testing as follows:

Level 1 .....Pre-Trial Tests
Level 2 .....Builder's Dock Trials
Level 3 .....Dock Trials
Level 4 .....Open Water\River Trials
Level 5 .....Final Acceptance Demonstrations

All demonstrations, tests, and trials shall be performed as specified herein and as specified in Section C of the contract. The Contractor shall furnish all labor, materials, tools, and test equipment as necessary and perform the testing, trials, and demonstrations specified.

It is expected that the Contractor shall complete the prior level of testing before moving on to subsequent levels.

2. Consumables and Operating Fluids

The Contractor shall furnish all fuel oil, hydraulic oil, lubricating oil, engine anti-freeze, treatment chemicals, degreasing agents, gases, potable water, fire fighting foam, and any other consumables required to perform the tests and demonstrations.

3. Test Documentation

The Contractor shall prepare an agenda and memoranda of the required tests and trials for the vessel in accordance with the requirements set forth herein. Two copies of the agenda and memoranda shall be submitted to the COR for review and acceptance 60 days prior to the start of scheduled testing (see Clause H02).

Upon completion of all levels of testing, the completed test memoranda (with data filled in), as well as any reports or certificates from Regulatory Bodies, and equipment manufacturers\suppliers shall be bound into a Test Report. Two copies of the completed report shall be submitted to the COR for his approval prior to Final Payment.

a. Test Agenda

The Contractor shall prepare a Test Agenda for Level 3 and Level 4 tests and trials. The agenda shall be a complete, detailed scheduled of all tests, trials, and demonstrations required by the contract. The Test Agenda shall be arranged by day, not date, and shall list specific test, trials, and demonstrations, and the sequence in which they shall be performed.

b. Test Memoranda

The Contractor shall prepare Test Memoranda for all systems and equipment tested under the Levels 1, 2, 3, 4, and 5 test and trial requirements of this clause.

The test memoranda shall describe the actual test procedures and data to be recorded. The procedures shall be in accordance with the "start-up" procedures for the equipment, as delineated in the operating manuals furnished for the equipment by the manufacturer. The Contractor shall incorporate demonstrations of all applicable controls, instruments, and alarms, into each system's Builder's Dock Trials, Dock Trials, Open Water\River Trials, and Final Acceptance Demonstrations sections of the Test Memoranda. Data recorded in time intervals shall be tabular so that data trends can be easily recognized.

Each test memorandum shall:

- Reference the manufacturer's manual(s) used to formulate the test procedure.
- Describe instrumentation for the respective test.
- Include blank spaces for recording relevant nameplate data, ambient conditions, tested parameter values for each time interval, and designated values for pass/fail.
- Include witness signature blocks for the Contractor Representative(s), the equipment supplier representative(s), the Government Representative(s) and the ABS surveyor, along with times, and dates.
- Include a space for writing comments

The test memoranda shall be typed on 8-1/2 inch by 11 inch sheets of paper, single side, and mounted in three ring binders, with dividers for each level of testing. Each page shall list the Marine Design Center project number (2520) and hull number (610) at the top.

The memoranda shall be arranged by level of testing, and then by system and equipment. Testing for a specific system or piece of equipment shall be recorded under its respective heading.

c. Test Reporting

Completion of system or vessel testing shall be reported to the COR in the following manner:

- Within two days of the completion of any tests, a copy of the memorandum for that specific test shall be available for review at the request of the COR.

- Upon completion of any level of testing, the COR shall be notified that the specific level of testing has been completed. At his discretion, the COR may request to review the test memoranda for that level of testing.

- With completion of subsequent levels of testing, all test memoranda shall be filled-in, and placed in the Test Report. The Test Report, with all prior test results, must be current at all times, and shall be available for review at the request of the COR at any time.

B. LEVEL 1 TESTING (PRE-TRIAL TESTS)

The Pre-trial tests are designed to ensure proper construction, and installation of all equipment, piping, and electrical systems, tanks, and exterior and interior bulkheads. For each vessel, pre-trial tests shall be performed during the course of construction and prior to the beginning of Level 2 testing (Builder's Dock Trials).

The COR shall be notified at least 24 hours in advance of any such testing and may, at his discretion, send a Government representative to witness any or all tests. The Contractor shall coordinate with ABS to ensure that they are present for all tests required to be witnessed for class.

Documentation of all pre-test inspection shall be in accordance with the requirements of Section E03 (Quality Control and Inspection). All deficiencies, including cracks, leaks, grounds detected in new circuits, or poor workmanship shall be corrected prior to commencement of the Builder's Dock Trials. Pre-trial tests shall include the following:

1. Hull

All tanks and watertight bulkheads shall be tested in accordance with ABS Rules.

2. Superstructure

All weathertight exterior bulkheads shall be hose tested for tightness prior to coating. All weathertight doors, windows, manholes, and hatches shall be hose tested for tightness.

3. Machinery Systems

The testing requirements set forth herein include system flushing procedures which shall be performed to demonstrate system cleanliness and integrity.

a. Steering System Hydraulics

Upon completion of the installation, the system's piping and fittings shall be flushed with hydraulic fluid. Jumpers shall be provided as necessary. Flushing shall be accomplished using a Contractor furnished pump to circulate the hydraulic fluid, and the Contractor furnished filters to collect all contaminants.

b. Compressed Air

Upon completion of installation, the piping of the compressed air system shall be hydrostatically tested in accordance with the ASME code. The system shall be inspected for leaks at the welds, fittings, etc. Upon completion of the hydrostatic test, the entire system shall be blown dry with air. The Contractor shall take proper precautions to protect any controls, equipment connections, the whistle, and the air tool stations.

c. Piping Systems

Hydrostatically test all piping systems (except CO2 piping) for leaks at 1-1/2 times working pressure for a period of not less than 10 minutes per test. Each system shall be inspected for leaks at the welds, fittings, hoses, etc. Upon completion of a system's hydrostatic testing, the system shall be thoroughly flushed with its respective fluid.

d. CO2 Piping

Upon completion of the CO2 piping and prior to the cylinders being connected to the system, the piping shall be pressure tested with CO2 or another inert gas. Testing of the piping shall be in accordance with the requirements outlined by USCG in 46 CFR, subchapter H, subpart 76.15, paragraph 76.15-15.

e. Exhaust Systems

Blank off and test the flanges, welds, and gaskets of each exhaust system using compressed air and soap bubbles. The main engine exhausts, the diesel generator exhausts, and the diesel driven fire pump engine shall all be checked in this manner.

f. HVAC

Blow out with compressed air all installed ductwork. Operationally test each supply and exhaust fan, along with the ducting to ensure the absence of leaks, adequate support, and acceptable vibration levels.

g. Potable Water

The Contractor shall clean, chlorinate, and flush all system tanks and piping.

4. Electrical Cabling

Insulation resistance readings of all installed power and lighting cable shall be taken using a 500 volt megger, and shall be in accordance with IEEE Standard 45, Section 34. The measured cable insulation resistance must meet or exceed the minimum values outlined in the referenced IEEE publication. Also, measure the voltage drop of the longest receptacle circuit. A complete record of all readings shall be kept to assure that all circuits and equipments have been checked.

C. LEVEL 2 TESTING (BUILDER'S DOCK TRIALS)

Builder's Dock Trials are a preliminary "run-through" of all required Level 3 (Dock Tests) by the Contractor. The intent of this testing is to provide both the Contractor and the COR reasonable assurance that all equipment and systems have been thoroughly prepared and are ready for formal testing for the Government in Dock Trials.

For the vessel, Builder's Dock Trials shall be conducted at the Contractor's facility listed in Section B of the contract. The COR shall be notified, in writing, at least 3 working days prior to the scheduled commencement date of the Builder's Dock Trials. The Test Report must be current prior to commencing the Builder's Dock Trials.

The trials shall be of sufficient scope and duration to assure that all machinery and equipment is operable and all systems are complete. The trials need not be carried out to the same degree as that required for Level 3 testing.

D. LEVEL 3 TESTING (DOCK TRIALS)

1. General

Dock Trials are the operability tests the Contractor must perform in the presence of the Government Representative to demonstrate the proper installation, operation, control, and performance of all equipment, machinery, and systems installed as part of this contract. Specific dock trials and demonstrations are defined in paragraph E.

In addition, each test or demonstration shall include control, instrumentation and alarm operation as applicable.

Prior to the start of Dock Trials, all construction and installations must be complete (except for final cleaning and touch-up painting), and all Level 1 and Level 2 testing must be successfully completed and documented. The Test Report must be current through the two levels of testing.

The commencement of Dock Trials shall not be sooner than one full working day after the completion of the Builder's Dock Trials. The COR shall be notified immediately of any condition which would delay the conduct of Dock Trials.

The COR shall be notified in writing 10 days in advance of the date set for testing of the vessel. The COR may request that the results of the Level 2 Testing be transmitted to the Marine Design Center at least one day prior to the start of the Dock Trials, if Level 2 Testing was not attended by a Government Representative.

All Dock Trial testing shall be conducted in the presence of a Government representative and any vendor representatives required by the contract. The tests shall be conducted in accordance with the test agenda.

The Contractor shall indicate on the test memoranda which tests will be performed using the diesel generators and which tests will be performed using the shore power.

The success of all tests and the existence of any deficiencies shall be determined by the COR. Deficiencies discovered during the Dock Trials shall be remedied prior to start of Level 4 Testing.

2. Safety Requirements

During Dock Trials and thereafter, the atmosphere in spaces being prepared for, and preserved by, paints and tank coatings dissolved in highly volatile, toxic, and flammable solvents (29 CFR 1915.35(b)), shall be tested frequently and shall be in accordance with the U.S. Occupational Safety and health Agency Standards regulations stated in CFR 1915.31-36.

Within 24 hours of final inspection, and before any representative of the U.S. Government boards the vessel for such duties, each compartment or space to be inspected shall be certified "SAFE FOR WORKERS" by the National Fire Protection Associations (NFPA) certified Marine Chemist. This means that in the compartment or space so designated:

a. The oxygen content of the atmosphere is at least 19.5 percent and below 22 percent by volume;
b. The concentration of flammable vapors is below 10 percent of the lower explosive limit (LEL);
c. Toxic materials in the atmosphere are within permissible concentrations;
d. Any residues or materials associated with any work in the space shall not produce uncontrolled release of toxic materials under existing atmospheric conditions while maintained as directed on the Marine Chemist's certificate.

The Contractor shall notify the Government when this certificate has been issued. The vessel will not be inspected and accepted by the Government without an NFPA Marine Chemist certificate for each hull compartment designated "SAFE FOR WORKERS."

E. SPECIFIC DOCK TRIALS & DEMONSTRATIONS FOR LEVEL 3

1. INCLINING EXPERIMENT

An inclining experiment shall be carried out in accordance with ASTM F1321-92. The Contractor shall prepare an inclining report in accordance with this criteria which gives the "as inclined" and "lightship" load displacements and CG locations.

2. WINDOW, DOOR, DECKHOUSE BOOT & GASKET TIGHTNESS

Using a water hose under pressure, demonstrate the weather tightness of all windows, doors, manholes, hatches, and the deckhouse boot and gasket between the floating deckhouse and the aft deckhouse.

3. MAIN ENGINES

For each main engine, demonstrate the following in the presence of an authorized manufacturer's representative:

- Cold starting. The cold starting testing shall demonstrate the minimum number of starts required by ABS for each engine.
- Starting and stopping of each main engine from the Main Engine Control Panels.
- Emergency shutdowns from the pilothouse console. Resetting at the Main Engine Control Panels.
- Automatic shutdown for engine overspeed.
- Demonstrate the operation of the engine instrumentation and all alarms at the local panel, the panel in the engineer's control room, and in the panel in the pilothouse.
- Operation of the jacket water heaters.

4. FIRE PUMP DIESEL ENGINE

For the fire pump diesel engine, demonstrate the following in the presence of an authorized engine manufacturer's representative:

- Cold starting.
- Stopping.
- Operation of the automatic shutdowns.
- Demonstration of the engine running indicating lights in the pilothouse and in the engineer's control room.
- Demonstrate the operation of the instrumentation and alarms at the local panel.
- Demonstration of the engine trouble alarm in the engineer's control room.
- Operation of the electric heaters.

5. DIESEL GENERATOR SETS

For each diesel generator set, demonstrate the following in the presence of an authorized manufacturer's representative:

- Cold starting.
- Stopping.
- Operation of the automatic shutdowns.
- Demonstrate the operation of the instrumentation and alarms at the local panel, the panel in the engineer's control room, and in the pilothouse.
- Operation of the electric heaters.

6. LOAD BANK TESTING

Each diesel generator set shall be load bank tested. Operate each generator set at ¼, ½, ¾, and full loads at 15 minute intervals, and then at 110% rated load (with the use of a load bank) for a minimum of 2 hours until the jacket water and exhaust temperatures stabilize. All engine and generator parameters shall be recorded at 5 minute intervals for the partial and full load periods, and at 15 minute intervals for the 110% load period.

7. MAIN ENGINE COOLING SYSTEM

Demonstrate that proper cooling water flow takes place during the operation of each main engine. Inspect each system for leaks. Check the expansion tank levels, engine jacket water temperature gauges (locally and at all remote panels), the jacket water cooler circuit inlet and outlet temperatures, and the after cooler circuit inlet and outlet temperatures of the keel coolers. Demonstrate the operation of the main engine jacket water expansion tank level alarms and the after cooling expansion tank level alarms.

8. DIESEL GENERATOR SET COOLING SYSTEM

Demonstrate that proper cooling water flow takes place during the operation of each diesel generator set engine. Inspect each system for leaks. Check the expansion tank levels, engine jacket water temperature gauge readings (locally and at all remote panels), jacket water expansion tank alarms, and at the 110% load check the inlet and outlet temperatures of the keel coolers.

9. FIRE PUMP DIESEL ENGINE COOLING SYSTEM

Demonstrate that proper cooling water flow takes place during the operation of the diesel driven fire pump engine. Inspect the system for leaks. Check the expansion tank level, engine jacket water temperature gauge reading (locally and at all remote panels), jacket water expansion tank alarm, and with the pump operating at its rated flow, check the inlet and outlet temperatures to the keel cooler.

10. ENGINE EXHAUST SYSTEMS

Demonstrate the operation of each main engine, diesel generator set engine, and the diesel driven fire pump engine exhaust system. Inspect each system for leaks and verify the backpressure on each system.

11. STEERING SYSTEM

Before leaving the dock for Open Water\River Trials, demonstrate the operation of the steering and flanking rudders from hard over to port to hard over to starboard, and intermediate positions to simulate normal operation. Record the time for the steering and flanking rudders to shift from hard over to hard over.

Demonstrate the operation of the steering rudders and the flanking rudders in the three different modes of operation; full follow-up, override, and jog modes. Demonstrate the auto-centering feature in concert with the propulsion controls.

Demonstrate the operation of each hydraulic pump and record the system's operating pressure. Inspect the hydraulic system for leaks. Check each system's filter.

Demonstrate the operation of the rudder angle indicators.

Demonstrate the operation of all system alarms and record their indications at each alarm panel location.

12. COMPRESSED AIR SYSTEM

Testing of the vessel's compressed air systems shall be carried out as outlined below. During the demonstrations, the Contractor shall indicate the source of power (genset or shore) used during the respective demonstration.

a. Ship's Service System

Demonstrate the charging of the air receivers from atmospheric to the system design pressure. Record the amount of time required to charge each receiver.

Demonstrate the ability of each compressor to cut-in at a set pressure and cut-out at a set pressure.

Verify the operation of the hour meter for each compressor.

Demonstrate the low starting air pressure alarm.

Demonstrate airflow to:

- Main engine air starting motors
- Diesel genset air starting motor
- Control air for the shaft barkes
- Sewage treatment plant
- All air tool stations

Each sea chest shall be blown down separately using the full capacity of one air receiver.

Verify the correct operation of the system air dryers.

Demonstrate the operability of all reducing stations, relief valves and receiver drain valves.

b. Air Horn System

Demonstrate the charging of the air receiver from atmospheric to the system design pressure. Record the amount of time required to charge the receiver.

Demonstrate the operability of the relief valve and receiver drain valve.

Demonstrate the operation of the air horn.

13. FUEL OIL SYSTEM

Ensure proper flow to and from the main engines, the diesel generator engines, and the diesel driven fire pump during operation. Check the fuel filters on each engine.

Demonstrate the operation of the fuel oil system centrifugal separator by operating for a minimum period of 8 hours. Demonstrate the broken water seal alarm for the centrifugal separator.

Demonstrate the operation of the fuel oil transfer pumps to transfer fuel between each tank as well as to the aft day tank. Demonstrate the operation of the emergency stop buttons for each transfer pump.

Demonstrate the operation of the following at their respective stations:

- The remote reading tank capacity gauges\sensors for each tank. Record readings in the engineer's control room. Verify the readings received at the stations against the tank soundings as well as against the levels shown on the liquid level gauges.
- The low level alarms installed for the fuel oil day tank and the fuel oil service tank. Verify alarms received in the engineer's control room and at the pilothouse console.
- The high level alarms for each tank. Verify alarms received at the fuel transfer station and in the engineer's control room.

Demonstrate the operation of the remote, emergency shut-off valves.

Indicate the source of power (genset or shore) used during the demonstrations.

14. LUBE OIL SERVICE SYSTEM

Demonstrate the operation of the lube oil pump to pump clean lube oil from the lube oil tank to each diesel engine.

Demonstrate the operation of the lube oil pump to pump dirty lube oil from each diesel engine to the waste oil tank.

Demonstrate the operation of the flow meter.

Demonstrate the operation of the lube oil system centrifugal separator. Demonstrate the broken water seal alarm for the centrifugal separator.

Record the liquid level gauge reading for the lube oil tank.

Indicate the source of power (genset or shore) used during the demonstrations.

15. GEAR OIL SERVICE SYSTEM

Demonstrate the operation of the gear oil pump to pump clean gear oil from the gear oil tank to each reduction gear.

Demonstrate the operation of the gear oil pump to pump dirty gear oil from each reduction gear to the waste oil tank.

Demonstrate the operation of the flow meter.

Record the liquid level gauge reading for the gear oil tank.

Indicate the source of power (genset or shore) used during the demonstrations.

16. HYDRAULIC OIL SERVICE SYSTEM

Demonstrate the operation of the hydraulic oil pump to pump clean hydraulic oil from the hydraulic oil tank to each steering hydraulics unit.

Demonstrate the operation of the hydraulic oil pump to pump dirty hydraulic oil from each steering hydraulics unit to the waste oil tank and to 55 gallon drums.

Record the liquid level gauge reading for the hydraulic oil tank.

Indicate the source of power (genset or shore) used during the demonstrations.

17. WASTE OIL SYSTEM

Demonstrate the operation of the waste oil pump to pump out the waste oil tank through the main deck level discharge station. Demonstrate the operation of the emergency stop button for the waste oil pump.

Record the liquid level gauge reading for the waste oil tank.

Indicate the source of power (genset or shore) used during the demonstrations.

18. OILY BILGE SYSTEM

Demonstrate the operation of the portable diaphragm pump to pump out each engine drain pan and the machinery spaces, lower engine room and shaft alley bilges.

Demonstrate the operation of the oily bilge tank pump to pump out the oily bilge tank through the main deck level discharge station. Demonstrate the operation of the emergency stop button for the oily bilge pump.

Record the liquid level gauge reading for the oily bilge tank.

Indicate the source of power (genset or shore) used during the demonstrations.

19. BILGE SYSTEM

Demonstrate the operation of each bilge pump to take suction from the bilge in each hull compartment and to discharge overboard.

Record the pump discharge pressure for each pump.

Demonstrate the bilge system operation to align the ballast system pump for bilge service and demonstrate the ballast pump's ability to take suction from the farthest bilge suction.

Indicate the source of power (genset or shore) used during the demonstrations.

20. BALLAST SYSTEM

Using the ballast pump, record the time required to completely fill the largest ballast tank and time required to empty the largest ballast tank. Record the pump discharge pressure during the filling of the tank and the stripping of the tank.

Also demonstrate the operation of the ballast system to:

- Take suction from each sea chest and to discharge water into each ballast tank.
- Discharge water from each ballast tank directly overboard.
- Transfer water between each tank.

Check the system duplex strainer upon completion of testing.

Indicate the source of power (genset or shore) used during the demonstrations.

21. SHAFT STUFFING BOX SUMP PUMPS

Demonstrate the operation of each shaft stuffing box sump pump to discharge water overboard.

Indicate the source of power (genset or shore) used during the demonstrations.

22. FIRE MAIN

Demonstrate the starting and stopping capability of the fire pump as well as the pump indication lights from the following stations:

- Locally by the fire pump
- The pilothouse console
- The engineer's control room
- Each fire hydrant station

Demonstrate the ability of the fire pump to provide two streams of water simultaneously from the hoses at two different fire stations. Several combination of stations shall be demonstrated. Record the pump discharge pressure at its outlet. Using a pitot tube, measuring the pressure at each nozzle.

Demonstrate the flushing of the gray water holding tank and the sewage holding tank with the fire pump.

Indicate the source of power (genset or shore) used during the demonstrations.

23. FIXED FIRE EXTINGUISHING (CO2) SYSTEMS

Proper operation of each CO_2 system shall be demonstrated by discharging a test cylinder through the respective system. The system supplier, in accordance with his test procedures, shall conduct each test.

Each demonstration shall include:

- Operation of the audible alarms in the respective spaces.
- Automatic shutdown of the engine room and generator room supply and exhaust ventilation fans.
- Automatic closure of the louvers of the supply and exhaust ventilation fans for the engine room and the generator room.

These tests may be done concurrently with the required ABS tests on this system. A Government representative must be present to witness the tests.

24. FIRE DETECTION & ALARM SYSTEM

Demonstrate the operation of the fire detection system. The testing and trials shall demonstrate:

- The activation of the alarms from each smoke detector and heat sensor installed on the vessel.
- The automatic shutdown of the HVAC System and any ventilation fans or heaters serving the protected spaces (except the upper and lower engine room, and generator room).
- The automatic closure of louvers for the fans or ventilation inlets serving the steering gear room, the machinery space, engineer's work area, and forward work area.
- The operation of the red indicating light on the pilothouse top.
- Operation of the back-up power supply and the system battery charger.

The system supplier, in accordance with his test procedures, shall conduct the test. A Government representative must be present to witness the tests.

During the demonstrations, registration of the alarms shall be recorded at the main alarm panel in the pilothouse, and the remote alarm panels located in the engineer's control room and at the exterior panel located on the forward end of the house.

25. HEATING, VENTILTION & AIR CONDITIONING

Testing of the vessel's heating, cooling and ventilation systems shall be carried out as outlined below. During the demonstrations, the Contractor shall indicate the source of power (genset or shore) used during the respective demonstration.

a. HVAC

Demonstrate the operation of the ductless split air conditioning units to heat, cool and provide outside air to all of the conditioned spaces listed in contract Clause C685. During the testing, for each evaporator unit:

- Verify the operation of each unit's thermostat.
- Verify the operation of the various fan speeds.
- Measure and record room temperatures during the different modes of operation.
- Record the cfm at the register of each unit.

b. Ventilation

Demonstrate the satisfactory operation of the supply and\or exhaust fans for the:

- Upper and lower engine room
- Generator room
- Steering gear room
- Machinery space
- Engineer's work area
- Forward work area
- Toilet\head spaces
- Galley range hood

During each demonstration, record the air velocities at each fan and duct discharge, and calculate the cfm for each fan.

Demonstrate the emergency stop buttons located on the exterior of the house for the supply and exhaust fans serving the following spaces:

- Upper and lower engine room
- Generator room
- Steering gear room
- Machinery space

c. Heating

Demonstrate the satisfactory operation of the electric resistance heaters serving the:

- Hold level
- Main deck level
- Upper deck level
- Texas deck level
- Pilothouse

26. POTABLE WATER SYSTEM

Testing of the vessel's potable water system shall be carried out as outlined below. During the demonstrations, the Contractor shall indicate the source of power (genset or shore) used during the respective demonstration.

a. Distribution

For the distribution system, demonstrate that there is adequate flow of hot and cold water from each respective fixture (sinks, showers, water closets, galley equipment, washing machine, and hose bibbs).

Demonstrate the hot water recirculating feature of the system. Record the pre-selected hot water temperature that causes the recirculating pump to kick-in.

Demonstrate the operation of each potable water pressure set pump to cut-in at a set pressure and cut-off at a set pressure by allowing flow to continue from a fixture. Record the pressures.

Measure the chlorine level in each potable water tank using a standard test kit.

Record the liquid level gauge reading for each potable water tank.

b. Potable Water Maker

Demonstrate the operation of the potable water maker. Demonstrate the back-flushing capabilities of the unit and all alarms.

Verify that the quality of water is safe for drinking.

27. SANITARY & SEWAGE SYSTEM

Demonstrate the operation of the black water system by flushing each head or urinal several times.

Demonstrate the operation of the gray water system by draining water from all attached fixtures (sinks, showers, galley equipment, washing machine).

Demonstrate the operation of the marine sanitation device to treat both black and gray water. Verify that water is treated and demonstrate discharging water overboard, to the sewage holding tank, and to the gray water tank.

Demonstrate the operation of the by-pass lines for the black water and gray water systems.

Demonstrate the ability of the stripping pump to pump out the sewage holding tank and the gray water holding tank.

Record the liquid level gauge reading for the sewage water holding tank and the gray water holding tank.

Indicate the source of power (genset or shore) used during the demonstrations.

28. DRAINAGE SYSTEM

For the weather deck drains, demonstrate the operation of all scupper drains to drain water from their respective decks.

29. TROLLEY BEAMS

Operate each trolley hook and power pack. Indicate the source of power (genset or shore) used during the demonstrations.

30. DECK CRANE

Demonstrate the operation of the deck crane to pick the utility boat out of its storage cradle and lower the utility boat into the water. Demonstrate the operation of the deck crane to raise the utility boat from the water and place onto its storage cradle.

31. UTILITY BOAT

Demonstrate the operation of the utility boat by running in river or open water for a minimum of 30 minutes. During the time of operation, the navigation lights shall be operated and the boat shall be put through various turning maneuvers.

32. CAPSTAN & TOWING WINCHES

Indicate the source of power (genset or shore) used during each of the following demonstrations.

a. Capstan

Operate the capstan in both directions under power. Verify the two speeds of operation. Operate the capstan by the foot pedal as well as by the pendant.

b. Towing Winches

Operate each winch in both directions under power. For the winches containing the face wires, demonstrate the operation from both the pilothouse and local (main deck) controls. For the winches containing the swing wires, demonstrate the operation from both the local (main deck) controls.

33. ROLLER BUTTONS

Demonstrate the operation of the roller buttons.

34. PILOTHOUSE WINDOW WIPERS & FANS

Demonstrate the operation of all window wipers and defrosting fans. Indicate the source of power (genset or shore) used during the demonstrations.

35. MISCELLANEOUS EQUIPMENT

Indicate the source of power (genset or shore) used during each of the following demonstrations.

a. Stewards Outfit

Demonstrate the operation of the following equipment located in the galley/mess:

- Dishwasher
- Range/oven
- Griddle/oven
- Fryer
- Range hood
- Refrigerators
- Freezers
- Under the counter refrigerators/freezers
- Coffee brewer
- Milk dispenser
- Yogurt machine
- Counter top electric fryer
- Counter top electric mixer
- Counter top tenderizer
- Counter top toaster
- Food waste disposer

b. Ice Machines

Demonstrate the operation of each ice machine.

c. Other Equipment

Demonstrate the operation of the following equipment:

- Under the counter refrigerator/freezer located in the pilothouse.
- Washing machine
- Clothes dryer
- Television and VCR/DVD player located in the crew's lounge

36. ALARM SYSTEMS

a. General Alarm System

Demonstrate the operation of the General Alarm system. Record the signaling of each bell and light upon activation of the system.

Verify the operation of the system's battery charger.

b. Bilge Alarm System

Demonstrate the operation of each bilge level sensor or switch installed in the voids or compartments below the main deck level.

During the demonstrations, registration of the bilge alarms (audible and visual) shall be recorded at the alarm panel in the pilothouse, and at the alarm panel located in the engineer's control room.

Verify the operation of the yellow indicating light on the pilothouse top.

c. Watertight Door Alarms

Demonstrate the operation of the watertight door alarms.

During the demonstrations, registration of the door alarms (audible and visual) shall be recorded at the alarm panel in the pilothouse, and at the alarm panel located in the engineer's control room.

37. COMMUNICATION EQUIPMENT

a. Public Address/Loudhailer System

Demonstrate the operation of the public address/loudhailer system for:

- Talk back features
- Use as loudspeakers
- Automatic foghorn capability

b. Interior Communications

Demonstrate the two-way intercom system from all stations. Verify the activation of the call signaling and flashing lights at the stations in the upper engine room, generator room, steering gear room, machinery space, and lower engine room.

38. TELEPHONE & DATA COMMUNICATIONS

Demonstrate the operation of the system from each location installed on the vessel.

39. TELEVISION SYSTEM

Demonstrate the operation of the television system from each location on the vessel. Contractor is responsible for supplying a television to be used for testing.

40. AC ELECTRICAL SYSTEM

a. General

In order to demonstrate the operation of the electrical system as an integrated system, the Contractor shall perform approximately ½ of the Level 3 machinery tests using the diesel generators. The remaining ½ of the Level 3 machinery tests shall performed using shore power supplied through the vessel's shore power receptacle. It is the Contractor's option as to which tests shall be powered from shore power and which tests shall be powered by the diesel generators.

b. Main Switchboard

Demonstrate the operation of all circuit breakers and all equipment in the main switchboard. For the generator breakers, the shore power breaker, and the off-vessel breaker, safely demonstrate all mechanical and electrical interlocks.

Demonstrate the ability of the generators to be paralleled and all of the following features of the switchboard:

- Automatic synchronizer
- Auto-manual synchronizer selector switch
- Generator power available lights
- Voltage regulator control rheostat
- Speed control rheostat
- Voltmeters and selector switches
- Ammeters and selector switches
- Frequency meter and selector switch
- Wattmeter
- Multifunctional amp, volt, and watt transducers.
- Space heaters
- Test Switch

For shore power operation, demonstrate the ability of the switchboard to monitor the following:

- Shore power available light
- Voltmeter
- Ammeter
- Frequency meter
- Phase sequence/loss system

Demonstrate the ground detection features in the switchboard for:

- 480 volt AC system – lights, ammeter, and test switch.
- 208Y/120 volt system – lights, ammeter and test switch.

c. Distribution Panels

Demonstrate the operation of all circuit breakers in all AC system distribution panels.

d. Motors and Controllers

Demonstrate the operation of each motor controller.

Demonstrate the low-voltage release (LVR) for the following motor controllers:

- Steering gear pumps
- Bilge pumps
- Fire main pump
- Air compressors
- Engine room supply and exhaust fans
- Generator room supply and exhaust fans

41. DC ELECTRICAL SYSTEM

a. General

Demonstrate the ability of the DC system to be energized from either the AC/DC power supply or the DC batteries.

b. Distribution Panels

Demonstrate the operation of all circuit breakers in all DC system distribution panels.

c. Batteries and Battery Chargers

Verify the operation of all battery chargers. For engine starting batteries, verify the operation of the chargers before and after starting of the respective engine.

42. EQUIPMENT & CONVENIENCE RECEPTACLES

Demonstrate the operation of all equipment and convenience receptacles by using 80% load for each receptacle. Check each receptacle for polarity. For GFCI types, demonstrate the ability of the receptacles to reset.

43. LIGHTING

Demonstrate the operation of all interior lights, exterior lights, and floodlights. Demonstrate the operation of all lighting switches.

Demonstrate the operation of all emergency lights, including the manual override switch to de-energize the emergency lights.

Demonstrate the operation of all lights for all gauges and instrumentation installed on the pilothouse console. Demonstrate the dimmer switches for the lights.

Demonstrate the operation of all navigation lights (including the whistle light). Demonstrate the operation of all circuit breakers and "bulb-out" alarms in the navigation lighting panel.

Demonstrate the operation of the Xenon searchlights. Demonstrate all searchlight controls.

44. SHORE POWER & OFF-VESSEL SERVICE

Demonstrate the operation of the shore power receptacle to supply power to the vessel. Verify the reverse service feature of the receptacle.

Demonstrate the operation of the off-vessel service to supply power off the vessel. Verify the load breaking capability of the receptacle.

F. LEVEL 4 TESTING (OPEN WATER\RIVER TRIALS)

1. GENERAL

After all items on the schedule of Dock Trials (Level 3) have been satisfactorily completed and any deficiencies corrected to the satisfaction of the COR, the Contractor shall commence a program of Open Water\River Trials.

Commencement of Open Water\River Trials shall not be sooner than one full working day after completion of Dock Tests.

The COR shall be notified immediately of any condition which would delay the conduct of the Open Water\River Trials.

The COR shall be notified in writing 10 days in advance of the date set for the trials.

The Contractor's personnel shall operate the vessel and shall make all observations and record all data. The Contractor shall provide appropriately licensed personnel as may be required by the USCG for the conduct of the trials.

All testing and trials shall be conducted in the presence of a Government representative and any vendor representatives required by the contract. The Contractor shall coordinate with ABS to assure that all trials required to be witnessed for class are witnessed.

2. TRIAL LOCATION

The site of the trials shall be such that accurately placed targets can be readily observed for the purpose of computing speeds. Alternately, the onboard DGPS may be used to measure the trial course. The site of the trials shall also be free from fog and traffic, with a depth of water of at least 20 feet. The Contractor shall take the vessel to the nearest mile range that will provide the required minimum depth and permit operation of the vessel at full speed.

3. TRIAL CONDITIONS

The vessel shall be complete and ready for trials, with a six to eight person trial crew aboard along with any required tools and miscellaneous equipment.

The trial conditions are:

- Full (100%) fuel oil in all fuel tanks and ballast as required for a draft of 8 ft – 3 inches, with no trim
- Full (100%) lube oil tank
- Full (100%) gear oil tank
- Full (100%) hydraulic oil tank
- Full (100%) potable water tanks
- Empty waste oil tank
- Empty oily bilge tank
- Empty sewage holding tank
- Empty gray water holding tank

Before trials, sound all tanks and record their respective levels.

Record the drafts at the draft marks and read the hull freeboards at the four corners. These draft readings shall be used to calculate the displacements and LCG. Compare these values to that obtained from the Inclining Experiment.

After trials are complete, again read the drafts and take the freeboards as a double check on the trial displacement and trim. Record all fuel tank soundings, and record the levels of all other vessel tanks.

Calculate the fuel (volume) consumed during the trial period.

4. GENERAL TRIAL DATA

The following data shall be furnished by the Contractor. The data shall be recorded at the location of the trials:

- Location of trial course and direction of runs
- Depth of water
- Density of the water
- Wind velocity, air temperature and wind direction relative to the course
- Displacement of vessel at beginning of trials
- Draft readings of the vessel fore and aft
- Freeboard forward and aft
- Total number/weight of people on board
- Ballast carried (if any)
- Propeller diameter, pitch and style

The above data shall be recorded for each day of the open water\river trials. The total fuel consumed (volume of fuel) shall be recorded for each day of the open water\river trials.

5. SPEED TRIALS – LIGHT

Speed trials are to be run over a measured distance in both directions to determine the speed of the vessel. The vessel shall be run at 600 rpm, 900 rpm, 1200 rpm, 1500 rpm, 1600 rpm (if applicable), and the maximum engine rpm as permitted by the bow wash.

The trial course selected shall be laid out over a depth in excess of 20 feet of water. Two runs over the course shall be made at each of the engine speeds, reversing the direction after each trial run.

The following performance data shall be recorded for each engine at the start and finish of each run:

- Engine tachometer
- Engine jacket water temperature
- Lube oil pressure
- Lube oil temperature
- Transmission oil pressure
- Transmission oil temperature
- Engine exhaust temperature
- Shaft tachometer
- Engine compartment temperature (hatches closed)
- Time over the course for each run

The above engine and transmission parameters shall be read and recorded at each of the following panels:

- the local instrumentation panels in the lower engine room.
- the engine vision system panels in the engineer's control room.
- the engine monitoring system panels in the pilothouse.

6. ENGINE PERFORMANCE TEST

The fuel rate of the main engines shall be compared to the original factory performance specifications during the vessel's test and trials. This comparison shall be made for the entire operating range of the engines by the engine manufacturer's representatives using instrumentation to acquire real-time fuel rate and engine output. The tests to be performed are similar to a Caterpillar PAR Test.

7. BOLLARD TEST

a. Head Against a Pier

The vessel headlog shall be put against a pier, push dock, or bulkhead and the engine rpm gradually increased to full speed ahead. Record that rpm and hold that rpm until the engine temperature increases to 20 degrees above the normal operating temperature or 30 minutes, whichever comes first.

The bollard rpm shall be checked against the predicted rpm to verify the propeller design point.

During the testing, note any excessive vibration and record gauge readings of the main engines every 5 minutes on the test memorandum. The parameters recorded for the speed trial above, shall be recorded for this test as well.

b. Thrust Measurement

The bollard thrust in deep water (more than 20 feet) of the vessel at full continuous power is to be measured and recorded, for both ahead and astern pull. The bollard measurement shall be made with the vessel in open water, using a tether secured to a suitably sized bollard or similar device. The bollard thrust shall be measured through use of a certified dynamometer, with a remote read out. If the dynamometer is installed in a wire rope line, the dynamometer shall be fitted with a swivel device to eliminate torque on the dynamometer. The Contractor shall provide an auxiliary boat for the duration of the bollard test, to maintain the heading of the vessel against current or wind.

For the test, record the static bollard thrust at full continuous power and the corresponding rpm for each engine. The rpm for each engine shall be read and recorded from the panels located in the lower engine room, the engineer's control room, and the pilothouse.

8. STEERING MANEUVERS

With the vessel running light, the following maneuvers shall be performed at a speed slow enough to prevent the forward deck from becoming awash.

a. Steering System - Ahead

1. Operate steering rudders from 0 degrees to 45 degrees to port. Record the time for the vessel to change direction 90 degrees. Record the time for the rudders to move from 0 degrees to 45 degrees to port. Center the rudders. Record the time for the rudders to move from 45 degrees to 0 degrees.

2. Operate steering rudders from 0 degrees to 45 degrees to starboard. Record the time for the vessel to change direction 90 degrees. Record the time for the rudders to move from 0 degrees to 45 degrees to starboard. Center the rudders. Record the time for the rudders to move from 45 degrees to 0 degrees.

3. Operate steering rudders from 0 degrees to 45 degrees to port. Record the time for the vessel to turn 360 degrees. Estimate the turning circle. Center the rudders.

4. Operate steering rudders from 0 degrees to 45 degrees to starboard. Record the time for the vessel to turn 360 degrees. Estimate the turning circle. Center the rudders.

b. Steering System - Astern

1. Operate steering rudders from 0 degrees to 45 degrees to port. Record the time for the rudders to move from 0 degrees to 45 degrees to port. Center the rudders. Record the time for the rudders to move from 45 degrees to 0 degrees.

2. Operate steering rudders from 0 degrees to 45 degrees to starboard. Record the time for the rudders to move from 0 degrees to 45 degrees to starboard. Center the rudders. Record the time for the rudders to move from 45 degrees to 0 degrees.

c. Flanking System - Ahead

1. Operate flanking rudders from 0 degrees to 45 degrees to port. Record the time for the vessel to change direction 90 degrees. Record the time for the rudders to move from 0 degrees to 45 degrees to port. Center the rudders. Record the time for the rudders to move from 45 degrees to 0 degrees.

2. Operate flanking rudders from 0 degrees to 45 degrees to starboard. Record the time for the vessel to change direction 90 degrees. Record the time for the rudders to move from 0 degrees to 45 degrees to starboard. Center the rudders. Record the time for the rudders to move from 45 degrees to 0 degrees.

d. Flanking System - Astern

1. Operate flanking rudders from 0 degrees to 45 degrees to port. Record the time for the rudders to move from 0 degrees to 45 degrees to port. Center the rudders. Record the time for the rudders to move from 45 degrees to 0 degrees.

2. Operate flanking rudders from 0 degrees to 45 degrees to starboard. Record the time for the rudders to move from 0 degrees to 45 degrees to starboard. Center the rudders. Record the time for the rudders to move from 45 degrees to 0 degrees.

Upon completion of the steering maneuvers and continuing to run light, the following features of the steering system shall be demonstrated:

- The three different modes of operation; full follow-up, override mode, and jog mode.
- The independent operation of each pair of main (steering) rudders.
- The independent operation of each pair of flanking rudders.
- The “electronic jockey bar” feature to simulate standard towboat steering and flanking.
- The auto-centering feature for the steering rudders.
- The auto-centering feature for the flanking rudders.
- The emergency operation of the system.
- Walking the vessel in the port and starboard directions.

The above features shall be demonstrated while performing a series of S-curves and while making a series of 360 degree turns in each direction. While performing the steering maneuvers, the operation of the system hydraulics shall be split (time-wise) amongst the two hydraulic units.

9. CRASH STOP

With the vessel running light, the vessel shall be brought from full speed and rpm ahead to full speed and rpm astern to stop. Record the distance the vessel travels and the time from full speed and rpm ahead to full rpm astern and to stop. Verify the operation of the shaft brakes.

Turn the vessel and repeat the crash stop while heading in the opposite direction.

10. TOWING TRIALS

a. General Requirements

The vessel shall be tested for a period of not less than four hours pushing barges ahead. An individual barge used in the tow shall have dimensions of 160 ft x 34 ft x 9 ft. The tow shall consist of either:

- Twelve empty barges, each at a draft of 2.0 ft. Or
- Nine loaded barges, each at a draft of 8 ft.

The Contractor may use other barge sizes as long as equivalent resistance is provided. The equivalent resistance shall be verified and documented by use of the Howe Equation.

The Contractor shall record the size of each barge used, its draft, and the type of load carried, if applicable.

b. Speed Runs - Towing

Speed trials shall be run over a course in both directions in order to determine the speed of the vessel. The vessel shall be run at the following engine speeds or until the forward deck becomes awash. The distance and speed shall be taken from the DGPS system.

	Idle	50%	65%	75%	100%
Engine RPM	600	800	1040	1200	1600

The vessel shall be run upstream at the noted throttle setting, maintaining each setting for a sufficient period of time for the speed to settle and for the engine representatives to take the proper readings. The process shall be repeated running downstream after the completion of the upstream crash stops.

During the trials, the parameters recorded for the speed trials - light (#5 above) shall be recorded for these trials as well. The data shall be read and recorded for each engine from the panels located in the lower engine room, the engineer's control room, and the pilothouse.

c. Crash Stops - Towing

With the vessel running upstream, bring the vessel from full speed and rpm ahead to full rpm astern to stop. Record the distance the tow travels and the time from full speed and rpm ahead to full rpm astern and to stop. Verify the operation of the shaft brakes. Repeat the process downstream.

d. Steering Maneuvers - Towing

With the full tow in front, demonstrate:

- Walking the tow to the port side
- Walking the tow to the starboard side
- Topping (turning) the complete tow

11. COMMUNICATION & NAVIGATION EQUIPMENT

During the Open Water\River Trials, the following equipment shall be demonstrated:

- Public address\loudhailer
- VHF radios
- District radio
- Radars
- Fathometer and all transducers
- Swing meter
- GPS/DGS
- Electronic chart system

12. FIRE MONITOR SYSTEM

With the vessel running light, demonstrate the following for the fire monitor system:

- The diesel driven fire pump engine operating at rated horsepower
- The simultaneous operation of both fire monitors to deliver water to its design range and height. Record pump discharge pressure.
- The simultaneous operation of each monitor to deliver foam. Record pump discharge pressure.
- The operation of the automatic pressure relief valves for the system

With the diesel driven fire pump engine operating at rated horsepower for a period of 45 minutes, record the following engine parameters in 5 minute intervals at the local engine panel:

- engine tachometer
- jacket water temperature
- engine oil pressure

13. NOISE SURVEY

The survey will entail the taking of sufficient noise measurements in each of the vessel's spaces to determine noise levels. A report shall be prepared containing the survey results.

The Contractor shall perform the survey using a subcontractor especially qualified for this work either by training or experience. The Contractor shall identify the proposed subcontractor in the Subcontracting Plan (see Clause H09) and include the subcontractor's qualifications.

The survey shall be conducted for each of the following conditions with all ventilation equipment and systems in full operation:

- Both main propulsion engines running at full speed, and one generator operating at normal bus load.
- Both main propulsion engines off, and one generator running.

The sound levels reported for each compartment shall be based on the average of the broadband A-weighted sound pressure levels taken at various representative locations of the reverberant field of the compartment or space in question. These measurements shall typically be taken at locations within a space where operating personnel are expected to spend a majority of their time. Measurements shall be taken in accordance with NVIC 12-82.

A report shall be prepared by the Contractor detailing the test results. The report shall include:

- A tabulation of the actual raw data taken during the survey for noise.
- Sketches of the spaces measured with the recorded sound levels denoted at the location of their measurement. Reduced size general arrangement drawings will be acceptable for this purpose.

The Contractor shall take corrective action as necessary to achieve the required criteria listed in contract Clause C180. The report shall describe any compartments which present a noise hazard according to OSHA regulation, 29 CFR 1910.95 "Occupational Noise Exposure."

F. LEVEL 5 – FINAL ACCEPTANCE DEMONSTRATIONS

Final Acceptance Demonstrations will only be performed if optional line item 0001AF is exercised by the Government resulting in the vessel being delivered by the Contractor to the Government's facility.

Final Acceptance Demonstrations are tests the Contractor must perform following the delivery of the vessel to demonstrate to the operating staff the proper operation, and performance of all the equipment, machinery, and electrical systems functioning as an "integrated whole" as described herein.

Final Acceptance Demonstrations shall be conducted following successful completion of all Level 4 tests, correction of all deficiencies and delivery of the vessel to the designated delivery point. Final Acceptance Demonstrations must be performed in the presence of a representative of the Contracting Officer.

The Contractor shall provide sufficient personnel and resources to operate all of the equipment and demonstrate its proper installation.

Test memoranda for this level of testing shall consist of a simplified checklist of each vessel system and each system's relevant features (i.e. start-up procedures, alarms, controls, etc).

E06 FINAL INSPECTION

When all work and testing has been satisfactorily completed at the builder's yard, the Contractor and a Government representative shall make a complete physical inspection and inventory of the vessel. A "punch list" of deficiencies will be developed and presented to the Contractor for corrective action.

All corrective action required to eliminate the "punch list" deficiencies shall be completed at the Contractor's facility. The Contractor shall give the COR 7 working days notice prior to the desired date of reinspection.

Prior to any inspection or reinspection, the vessel and all of its equipment shall be thoroughly cleaned and all painting and finishes required to be performed by the Contractor put in first class condition.

E07 PROVISIONAL ACCEPTANCE

The vessel will be Provisionally Accepted at the builder's yard upon satisfactory completion of the following:

- Tests and trials (through Level 4)
- Correction of all "punch list" deficiencies

Upon completion of Provisional Acceptance, the Government may choose to:

- Make Final Acceptance at the Contractor's Facility or
- Exercise optional line item 0001AF, in which case the Contractor shall deliver the vessel to the Government's Facility. See contract Section F, Clause F02.

If optional line item 0001AF is exercised by the Government, delivery of the vessel may not be started until Provisional Acceptance of the vessel is made at the Contractor's Facility.

E08 FINAL ACCEPTANCE

Final Acceptance of the vessel will follow Provisional Acceptance. Final Acceptance will be at the Contractor's Facility unless optional line item 0001AF is exercised by the Government.

If optional line item 0001AF is exercised by the Government, the Contractor shall assume all costs associated with the delivery, and shall be responsible for delivering the vessel, afloat and "Ready for Service" at the delivery point designated in contract Section F, Clause F02.

Upon reaching the designated delivery point, the Contractor shall perform Final Acceptance Demonstrations (Test Level 5) as outline above in Clause E05. Upon completion of the demonstrations, the vessel shall be made "Ready for Service".

At the time of Final Acceptance, the vessel will be "Ready for Service", which is defined as:

- clean inside and out
- all trash, dunnage, lashing, and delivery related material disposed of
- loose items of outfit in place
- all electrical and mechanical systems operational
- equipment properly adjusted
- instruments and electronics calibrated or aligned
- damaged paint touched up
- completion of Final Acceptance Demonstrations (Level 5 Testing)

The Contractor shall provide the necessary personnel, equipment, and materials to make the vessel "Ready for Service".

At Final Acceptance, the vessel shall be subject to a complete inspection with every space, compartment, and deck of the vessel cleaned to the satisfaction of the COR.

Any fuel remaining at the time of Final Acceptance will be purchased by the Government at the invoice price, which will be the subject of a contract modification.

E09 COMMERCIAL WARRANTY OF SUPPLIES

The Contractor shall assign, in writing, all commercial warranties for equipment provided under this contract to the Government. The effective date of all commercial warranties shall be the date of Final Acceptance.

THIS PAGE INTENTIONALLY LEFT BLANK

PART I - THE SCHEDULE - SECTION F
DELIVERY OR PERFORMANCE

TABLE OF CONTENTS

CLAUSE		PAGE
F01	PERFORMANCE	2
F02	PLACE OF DELIVERY	6
F03	NOT USED	6
F04	LIQUIDATED DAMAGES	7
F05	FOB DESTINATION CLAUSE	8

PART I - THE SCHEDULE - SECTION F
DELIVERY OR PERFORMANCE

F01 PERFORMANCE

FAR 52.211-8 TIME OF DELIVERY (JUN 1997)

(a) The Government requires completion of all work and delivery to be made in accordance to the following schedule:

REQUIRED DELIVERY SCHEDULE

ITEM NUMBER	DESCRIPTION	QUANTITY	WITHIN DAYS AFTER DATE OF NOTICE TO PROCEED
0001AA	PLANNING	1 job	30 Calendar days
0001AB	ENGINEERING & SCHEDULING	1 job	240 calendar days
0001AC	CONSTRUCTION, TESTING & ACCEPTANCE AT CONTRACTOR'S FACILITY	1 job	400 calendar days

Optional Items:

ITEM NUMBER	DESCRIPTION	QUANTITY	WITHIN DAYS AFTER DATE OF NOTICE TO PROCEED
0001AD	FLOATING DECKHOUSE & NOISE CRITERIA	1 job	Same date as acceptance at the Contractor's Facility (Line Item 0001AC)
0001AE	SPARE PARTS	1 job	Same date as acceptance at the Contractor's Facility (Line Item 0001AC)
0001AF	DELIVERY TO GOVERNMENT FACILITY	1 job	45 calendar days after acceptance at the Contractor's Facility (Line Item 0001AC)

The Government will evaluate equally, as regards time of delivery, offers that propose delivery of each quantity within the applicable delivery period specified above. Offers that propose delivery that will not clearly fall within the applicable required delivery period specified above, will be considered non-responsive and rejected. The Government reserves the right to award under either the required delivery schedule or the proposed delivery schedule, when an earlier delivery schedule than required above. If the offeror proposes no other delivery schedule, the required delivery schedule above will apply.

OFFEROR'S PROPOSED DELIVERY SCHEDULE

ITEM NUMBER	DESCRIPTION	QUANTITY	WITHIN DAYS AFTER DATE OF NOTICE TO PROCEED
0001AA	PLANNING	1 job	_____ calendar days
0001AB	ENGINEERING & SCHEDULING	1 job	_____ calendar days
0001AC	CONSTRUCTION TESTING & ACCEPTANCE AT CONTRACTOR'S FACILITY	1 job	_____ calendar days
0001AD	FLOATING DECKHOUSE & NOISE CRITERIA	1 job	Same date as acceptance at the Contractor's Facility (Line Item 0001AC)
0001AE	SPARE PARTS	1 job	Same date as acceptance at the Contractor's Facility (Line Item 0001AC)
0001AF	DELIVERY TO GOVERNMENT FACILITY	1 job	_____ calendar days after acceptance at the Contractor's Facility (Line Item 0001AC)

(b) Attention is directed to the Contract Award provision of the solicitation that provides that a written award or acceptance of offer mailed, or otherwise furnished to the successful offeror, results in a binding contract. The Government will mail or otherwise furnish to the offeror an award or notice of award not later than one day after the award is dated. Therefore, the offeror should compute the time available for performance beginning with the actual date of Notice To Proceed rather than the date the written notice is received from the Contracting Officer through the ordinary mails. However, the Government will evaluate an offer that proposes delivery based on the Contractor's date of receipt of the contract or notice of award by adding five days for delivery of the award through the ordinary mails. If, as so computed, the offered delivery date is later than the required date, the offer will be considered non-responsive and rejected.

(End of Clause)

For the purpose of estimating the phase completion and contract completion dates, the Contractor should take into account the time required to review the Contractor's submittals and the time between phases required to issue a Notice To Proceed. Refer to Clause H01 for additional explanation.

F02 PLACE OF DELIVERY

A. CONTRACTOR'S FACILITY (Option for Delivery Not Exercised)

If the Government chooses to not exercise optional line item 0001AF, the location for Final Acceptance and delivery to the Government shall be the Contractor's Facility listed in Section B of the contract. For details on Final Acceptance, see contract Clause E08.

B. GOVERNMENT'S FACILITY (Optional Line Item 0001AF Exercised)

If the Government exercises optional line item 0001AF, the Contractor shall deliver the towboat afloat and ready for service at the following location:

U.S. Army Corps of Engineers
U.S. Army Engineer District, Vicksburg
Mat Sinking Unit
Vicksburg, Mississippi
Vicksburg Harbor
Mile 435.0 (AHP) Lower Mississippi River

For details on Final Acceptance, see contract Clause E08.

F03 NOT USED

F04 LIQUIDATED DAMAGES

FAR 52.211-11 LIQUIDATED DAMAGES – SUPPLIES, SERVICES OR RESEARCH AND DEVELOPMENT

(a) If the Contractor fails to deliver the supplies or perform the services within the time specified in this contract, or any extension, the Contractor shall, in place of actual damages, pay to the Government as fixed, agreed, and liquidated damages, for each calendar day of delay the sum of:

For Line Item 0001AA; $140.00
For Line Item 0001AB;.....$420.00
For Line Item 0001AC;.....$710.00
For Optional Line Item 0001AF; $710.00

(b) Alternatively, if delivery or performance is so delayed, the Government may terminate this contract in whole or in part under the Termination for Default - Fixed Price, Supply and Services clause in this contract and in that event, the Contractor shall be liable for fixed, agreed, and liquidated damages accruing until the time the Government may reasonably obtain delivery or performance of similar supplies or services. The liquidated damages shall be in addition to excess costs under the Termination clause.

(c) The Contractor shall not be charged with liquidated damages when the delay in delivery or performance arises out of causes beyond the control and without the fault or negligence of the Contractor as defined in the Termination for Default - Fixed Price, Supply and Services clause of this contract.

(End of Clause)

F05 FOB DESTINATION CLAUSE

FAR 52.247-34 F.O.B. DESTINATION (NOV 1991)

(a) The term "f.o.b. destination," as used in this clause, means-

(1) Free of expense to the Government, on board the carrier's conveyance, at a specified delivery point where the consignee's facility (plant, warehouse, store, lot, or other location to which shipment can be made) is located; and

(2) Supplies shall be delivered to the destination consignee's wharf (if destination is a port city and supplies are for export), warehouse unloading platform, or receiving dock, at the expense of the Contractor. The Government shall not be liable for any delivery, storage, demurrage, accessorial, or other charges involved before the actual delivery (or "constructive placement" as defined in carrier tariffs) of the supplies to the destination, unless such charges are caused by an act or order of the Government acting in its contractual capacity. If rail carrier is used, supplies shall be delivered to the specified unloading platform of the consignee. If motor carrier (including "piggyback") is used, supplies shall be delivered to truck tailgate at the unloading platform of the consignee, except when the supplies delivered meet the requirements of Item 568 of the National Motor Freight Classification for "heavy or bulky freight." When supplies meeting the requirements of the referenced Item 568 are delivered, unloading (including movement to the tailgate) shall be performed by the consignee, with assistance from the truck driver, if requested. If the contractor uses rail carrier or freight forwarded for less than carload shipments, the Contractor shall ensure that the carrier will furnish tailgate delivery, when required, if transfer to truck is required to complete delivery to consignee.

(b) The Contractor shall--

(1) (i) Pack and mark the shipment to comply with contract specifications; or
(ii) In the absence of specifications, prepare the shipment in conformance with carrier requirements;

(2) Prepare and distribute commercial bills of lading;

(3) Deliver the shipment in good order and condition to the point of delivery specified in the contract;

(4) Be responsible for any loss of and/or damage to the goods occurring before receipt of the shipment by the consignee at the delivery point specified in the contract;

(5) Furnish a delivery schedule and designate the mode of delivering carrier; and

(6) Pay and bear all charges to the specified point of delivery.

(End of clause)

THIS PAGE INTENTIONALLY LEFT BLANK

PART I – THE SCHEDULE – SECTION G
CONTRACT ADMINISTRATION DATA

TABLE OF CONTENTS

CLAUSE		PAGE
G01	ACCOUNTING & APPROPRIATION DATA	2
G02	CONTRACT MANAGEMENT	2
G03	PAYMENT BY	2
G04	BILLING ADDRESS	2
G05	TECHNICAL INQUIRIES	3
G06	FAR 252.242-7000 POST AWARD CONFERENCE (DEC 1991)	3

PART I – THE SCHEDULE – SECTION G
CONTRACT ADMINISTRATION DATA

G01 ACCOUNTING & APPROPRIATION DATA

To be furnished at the time of award.

G02 CONTRACT MANAGEMENT

Contract management will be performed by the Marine Design Center:

Marine Design Center
U.S. Army Corps of Engineers
Wanamaker Building, Room 630 South
100 Penn Square East
Philadelphia, Pennsylvania 19107-3390

Phone: (215) 656-6850

G03 PAYMENT BY

U.S. Army Corps of Engineers Finance Center
5722 Integrity Drive
Millington, TN 38054-5005

G04 BILLING ADDRESS

Invoices shall be forwarded to the below address (see also Section I, Clause 252.232-7003, Electronic Submission of Payment Requests):

Marine Design Center
U.S. Army Corps of Engineers
Wanamaker Building, Room 630 South
100 Penn Square East
Philadelphia, Pennsylvania 19107-3390

G05 TECHNICAL INQUIRIES

All technical inquiries should be directed to: Michael Landis (215) 656-6850

G06 FAR 252.242-7000 POST AWARD CONFERENCE (DEC 1991)

The Contractor agrees to attend any post award conference convened by the contracting activity or contract administration office in accordance with Federal Acquisition Regulation subpart 42.5.

THIS PAGE INTENTIONALLY LEFT BLANK

PART I - THE SCHEDULE - SECTION H
SPECIAL CONTRACT REQUIREMENTS

TABLE OF CONTENTS

CLAUSE PAGE

H01 CONTRACT ORGANIZATION....2

H02 CONTRACTOR SUBMITTALS....5

H03 DESIGN REQUIREMENTS....7

H04 NOT USED....9

H05 REVIEW OF CONTRACTOR SUBMITTALS....10

H06 CONSTRUCTION PLAN....11

H07 CONTRACTOR'S SAFETY PLAN....13

H08 PROCUREMENT PLAN....13

H09 SUBCONTRACTING PLAN....14

H10 MATERIALS & EQUIPMENT SCHEDULE....15

H11 SUBMITTAL SCHEDULE....16

H12 DRAWING INDEX....16

H13 ENGINEERING & DRAWINGS....17

H14 "AS-BUILT" DRAWINGS....22

H15 SUBSTITUTIONS....24

H16 MANUFACTURER OR SUBCONTRACTOR DRAWINGS & MANUALS....25

H17 NOT USED....25

H18 RECORD PHOTOGRAPHS....26

H19 GOVERNMENT PROPERTY....27

H20 PROGRESS PAYMENT BASED ON PERCENTAGE OR STAGE OF COMPLETION....28

PART I - THE SCHEDULE - SECTION H
SPECIAL CONTRACT REQUIREMENTS

H01 CONTRACT ORGANIZATION

A. PLANNING

Planning is Line Item 0001AA of the contract and commences only after receipt by the Contractor of a Notice of Contract Award (Award) and a Notice To Proceed (NTP) with contract Line Item 0001AA , "PLANNING," respectively. In this first phase of the contract, the Contractor is required to present planning information that demonstrates a logical, orderly and workable approach to the contract. The Contractor is not authorized to begin the engineering and scheduling until this phase of the project is completed, and the planning documents are approved by the COR, at which time an additional Notice To Proceed will be issued.

B. ENGINEERING & SCHEDULING

Engineering and Scheduling is line item 0001AB of the contract and commences only after receipt by the Contractor of a Notice To Proceed with contract Line Item 0001AB, "ENGINEERING & SCHEDULING," respectively. In this second phase of the contract, the Contractor is required to complete the design, perform other production engineering, and develop the contract schedule. The Contractor is not authorized to begin physical construction until this phase of the project is completed, and the engineering and scheduling documents are approved by the COR, at which time an additional Notice To Proceed will be issued.

C. CONSTRUCTION, TESTING AND ACCEPTANCE AT CONTRACTOR'S FACILITY

Construction, Testing, and Acceptance at the Contractor's Facility is line item 0001AC of the contract and will commence only after completion of the engineering and scheduling phase and receipt by the Contractor of Notice To Proceed with Line Item 0001AC, respectively. During this third phase of the contract, necessary records and scheduling documents shall be completed, the vessel constructed, tests and trials performed, as-built drawings completed, and final acceptance shall be made. This phase of the contract is completed with receipt by the Contractor of a letter of Final Acceptance and submittal of all final documents.

D. PHASE SEQUENCING

It is intended that the three phases for the vessel will be performed sequentially. Should the contractor include CLIN 0001AF – Delivery to Government Facility, this event shall be performed after Phase III (Line Item 0001AC) is complete. This item would omit the contract requirement for acceptance at the Contractor's facility. Final acceptance would be performed at the Government's facility.

The time allotted for each phase spans an interactive process involving both the Contractor and the Government. This process includes preparation, review and approval of the phase submittals, contract administration, mailing, preparation and issuance of Notices To Proceed.

In order for the Contractor to plan the work and for the Government to properly apply Liquidated Damages and Termination Clauses, a graphic identifying the sequence milestones and the performance period allotted to each milestone has been developed and is shown on a following page.

The graphic shows the three basic contract phases, in addition to the Delivery Option. Each contract phase is further subdivided into the milestones that must be completed within each phase and the amount of time allowed for accomplishing each. Note that the total time allowed for each phase of the contract matches the "REQUIRED DELIVERY SCHEDULE" in Clause F01. The graphic will be updated to reflect the successful Offeror's proposed schedule if it is shorter than the required schedule.

The milestones and periods of performance identified in the graphic are contract requirements.

The Contractor must be aware that the quality, completeness and detail of the submittals have a direct bearing on the approval process. Extended review iterations will extend the time necessary to receive approval of the submittals and will subject the Contractor to assessment of Liquidated Damages or Termination for Default.

Refer to Clause H05, Review of Contractor Submittals, for information concerning the submittal review process.

CONTRACT PHASE SEQUENCING

Receipt by Contractor of NTP Phase I (Planning)

Phase I - CLIN 0001AA 30 Calendar Days	20 CD	Receipt at MDC of initial submittal of all Phase I deliverables
	5 CD	Receipt by Contractor of submittal review
	5 CD	Receipt at MDC of final revised Phase I deliverables (if necessary)

15 CD

Receipt by Contractor of NTP Phase II (Engineering & Scheduling)

Phase II - CLIN 0001AB 240 Calendar Days	180 CD	Receipt at MDC of initial submittal of all Phase II deliverables
	30 CD	Receipt by Contractor of submittal review
	30 CD	Receipt at MDC of final revised Phase II deliverables (if necessary)

30 CD

Receipt by Contractor of NTP Phase III (Construction, Testing, and Acceptance at Contractor's Facility)

Phase III - CLIN 0001AC 400 Calendar Days	400 Calendar Days	Construction, Testing, and Acceptance at Contractor's Facility CLIN 0001AD - Floating Deckhouse CLIN 0001AE - Spare Parts

If CLIN 0001AF is exercised:

Delivery Option	45 CD	CLIN 0001AF - Delivery to Government Facility

H02 CONTRACTOR SUBMITTALS

A. PLANNING - PHASE I SUBMITTALS

The following is a summary of the items that the Contractor must submit during the Planning Phase. All items must be received, reviewed and accepted by the COR before a Notice To Proceed (NTP) will be issued for the Engineering and Scheduling phase of the contact:

SUBMITTAL ITEM	CONTRACT CLAUSE REFERENCE
• Quality Control Plan for Phase II	E03
• Authorized Contractor Representative List	E03
• Construction Plan	H06
• Procurement Plan	H08
• Subcontracting Plan	H09
• Engineering Qualifications	H09
• Submittal Schedule	H11
• Drawing Index	H12

B. ENGINEERING & SCHEDULING - PHASE II SUBMITTALS

The following is a summary of items that the Contractor must submit after a Notice To Proceed with the "ENGINEERING & SCHEDULING" phase of the contract is issued. All items must be received, reviewed, and approved by the COR before a Notice To Proceed with the "CONSTRUCTION, TESTING & ACCEPTANCE AT CONTRACTOR'S FACILITY" phase of the contract will be issued. The following items are required:

SUBMITTAL ITEM	CONTRACT CLAUSE REFERENCE
• Quality Control & Inspection Plan for Phase III	E03
• Test Memoranda & Agenda	E05
• Contractor Safety Plan	H07
• Material & Equipment Schedule	H10
• Engineering & Drawings	H13

C. CONSTRUCTION, TESTING, & ACCEPTANCE AT CONTRACTOR'S FACILITY - PHASE III SUBMITTALS

The following is a summary of items that the Contractor must submit after a Notice To Proceed with the "CONSTRUCTION, TESTING, and ACCEPTANCE AT CONTRACTOR'S FACILITY" phase of the contract is issued. All items must be received, reviewed and approved by the COR before Final Payment will be made. The following items are required:

SUBMITTAL ITEM	CONTRACT CLAUSE REFERENCE
• ABS Certificate of Classification	C004
• USPHS Public Health Service Certificate	C004
• Welder Certification	C025
• Certificate of Measurement (Tonnage)	C145
• Paint Certification & Warranty	C406
• Certificate of Examination and Test of Wire Rope	C456
• Test Schedule	E05
• Test Report	E05
• Inclining Experiment & Report	E05
• Noise Survey	E05
• Commercial Warranties	E09
• Purchase Orders\Specifications	H10
• As-Built Drawings	H14
• Manufacturer's or Subcontractor's Drawings and Manuals	H16
• Record Photographs	H18

H03 DESIGN REQUIREMENTS

The Contractor shall provide the necessary engineering to develop a Detailed Design for the vessel. The paragraphs listed below provide a description of the level of detail required for performing additional engineering and design development.

The scantlings and main structure for the hull, deckhouse and foundations shall be defined. Structural drawings shall delineate all structural members, brackets, plating and plate seams, all welding and all joint details complete with all dimensions noted. "Typical" views may be used for numerous repetitions of identical or mirror images. Every effort shall be made to make the design consistent from sheet to sheet and drawing to drawing. Calculations showing that all plate, bulkheads, stiffeners, girders, stanchions and diagonals meet the minimum requirements of ABS and any specific requirements of Section C of this solicitation shall be submitted with the structural drawings. The calculations shall be clearly annotated as to specific requirement being addressed and explanation of all assumptions.

A detailed Weight Estimate shall be generated using the MDC Work Breakdown Structure (WBS) system organization. The Weight Estimate shall break down the weights sufficiently so as to allow easy review of all values with reference to the drawings they represent, their quantity and location. Weights shall not be lumped into single values by deck level or longitudinal segment. An example of an acceptable weight estimate reflecting level of detail shall be provided to the successful bidder. A detailed Intact and Damage Stability analysis shall be performed for each vessel. Each report shall be prepared in accordance with the requirements noted in the appropriate clauses of Section C (clause C115, C150, and C155).

The propulsion system will be defined with main engine, gear, shaft couplings, shafting, and propellers selected. Drawings shall define the machining details of the shafts, liners, bearings, and couplings. Calculations justifying the engines, gears, shafting, and propeller selections shall be submitted with the associated drawing. Shaft sizing calculations shall be included on the shaft drawing. A torsional analysis of the system shall be performed.

Rudder design shall include shaft sizing calculations presented on the rudder drawings. Machining details for all shafts, liners, bearings, and seals shall be defined on the drawings. The steering system shall include all pumps, cylinders, pipe, components, greasing methods, jockey bars, pins, stops, and tanks. Foundations shall be developed and detailed for all components. Calculations sizing the jockey bars, stops, cylinders and their foundations, and catalog cutsheets of the primary components shall be submitted with the drawings.

For the mechanical systems, all pumps, compressors, heat exchangers, hydraulic components and machinery, deck machinery and ancillary equipment shall be sized and selected. The mechanical system drawings shall show all valves, filters, controls, receivers, pumps, strainers, sea chests, consumers, takedown connections, separators and other principal features or devices to scale. The drawings shall consist of a system schematic on the first sheet, a detailed system drawing superimposed on a vessel arrangement with a Material List and a Equipment List and necessary sections and elevations on the second and subsequent sheets. On detailed drawings, pipe one inch in diameter and smaller may be shown as single lines, while larger pipe shall be shown as double lines depicting the actual scaled size. Pipe shall be located and dimensioned in the vertical and horizontal plane. Sections and elevations are required only to ensure that piping, ducting and cabling are routed through congested areas without interference. Calculations sizing the equipment shall be submitted with the system drawing. These calculations shall include the sizing of piping systems and pumps. Catalog cut-sheets of all equipment shall be submitted with the drawing.

Major equipment on all drawings (engines, motors, pumps, strainers, etc.) shall be shown in actual outline form (not schematic or by block). System routings shall be sufficiently detailed to identify the intended routing with respect to vessel structure, elevation, major vessel equipment and major components of other systems, but without dimensions.

HVAC systems shall be defined and will include the calculations of fan and blower sizes and powers, heating and air conditioning equipment sizing and duct sizing. The HVAC system drawings shall consist of a system schematic on the first sheet, a detailed system drawing superimposed on a vessel arrangement with a material and equipment list, as well as the necessary sections and elevations on the second and subsequent sheets. Ducting shall be located and dimensioned in the vertical and horizontal planes. Sections and elevations are required only to ensure that piping, ducting and cabling are routed through congested areas without interference. An HVAC load analysis will be completed. These calculations shall be submitted with the system drawings.

The electrical system shall be defined with consumers identified and quantified, controls and switchgear identified, a complete load analysis, short circuit analysis and one line diagram prepared and generator sets selected. Cabling and lighting drawings shall be prepared using the general arrangements for background. Catalog cut-sheets of the gensets and primary power equipment shall be submitted with the system drawings.

Joiner details and material selection shall be worked out with schedules for sheathing, insulation, doors, windows, furniture, fixtures, etc. Catalog cut-sheets shall be submitted with the system drawings.

Any drawing submitted without the required catalog cutsheets and calculations, as stated herein or in the appropriate clause of Section C, will not be considered a formal submittal and will not be reviewed.

During the development of the detailed design, the Contractor may discover circumstances that dictate a need to change some of the equipment or materials specifically required by the contract. Examples of this situation might be that the item is no longer available, or the lead time is too great to meet the vessel delivery. Such circumstances shall be immediately identified to the COR by letter for resolution, along with a proposed solution. Adjustments to the contract required as a result of such circumstances, will be made under the "CHANGES" Clause.

The Contractor shall prepare detailed design drawings for regulatory submittals, COR submittal, "As-Built" drawings, and other technical details necessary to support his administration, operation, and production practices. Refer to Clause H13, Engineering & Drawings, for a minimum list of required drawings and drafting standards.

H04 NOT USED

H05 REVIEW OF CONTRACTOR SUBMITTALS

The Marine Design Center will review the drawings, data and other material submitted by the Contractor in the various contract phases for the vessel.

Submittals from the Contractor must be clear as to what the submittal represents and the action the Contractor requests the Government perform.

The Government's review is intended to be limited to the functional aspects of the submittals to ensure compliance with the contract specifications and will include technical review to ensure that sound naval architecture and marine engineering practices are followed. This does not relieve the Contractor from any engineering, design, or quality assurance responsibility.

The Contractor shall comply with the requirements of the design embodied in the contract. Where review, approval, classification or certification by ABS, USCG, USPHS, or other regulatory agency is a provision of the contract, Government review of Contractor submittals may not address the requirements of those agencies. It is implicit that Government acceptance of submittals will be contingent upon satisfactory fulfillment of those requirements.

Submittals found to be completely acceptable to the Contracting Officer's Representative without comment will be marked "ACCEPTED."

Submittals found to be generally acceptable to the Contracting Officer's Representative with qualifying comments will be marked "ACCEPTED WITH COMMENTS" but may or may not require resubmission depending on the COR's assessment of the criticality of the comments.

"ACCEPTED WITH COMMENTS" submittals being resubmitted will be reviewed only to ensure that the previous comments have been adequately incorporated. Resubmission requirements will be clearly marked on the return.

Submittals unacceptable to the Contracting Officer's Representative will be marked "NOT ACCEPTED." Submittals not accepted will always require full and complete re-submittal. Such re-submittal will result in a full and complete review as though it was a first submittal.

Submittals furnished for information only or for which the Contractor has not indicated the required review action will be marked "EXAMINED."

The Contractor shall insure that all review comments are incorporated in corrected submittal documents or are rebutted in separate correspondence. The Contractor is encouraged to completely discuss all submittal comments with the MDC author in order to insure complete and effective communication.

The Contractor will not use the drawing review or submittal process for contract deviations. Changes in equipment, materials, construction techniques or details must be the subject of separate, specific correspondence. Any such request made by the Contractor must be specific and clear as to what is contractually required, the proposed change, location and/or extent, benefits resulting from the change and effect on contract cost and delivery.

Submittals for review by the Government will be return mailed in accordance with the Contract Phase Sequencing graphic presented in Clause H01. Contractors shall plan their submittal schedules so as not to affect contract performance.

H06 CONSTRUCTION PLAN

After receipt of the Notice To Proceed with Line Item 0001AA, PLANNING, the Contractor shall develop and submit to the Contracting Officer's Representative the Contractor's proposed plan for the construction of the vessel.

The plan shall be prepared on USACE standard ENG Form 2454 (Construction Progress Chart) furnished by the Government. A copy of this form is included in Section J. The plan will be a summary level view of the contract. The plan will show the Contractor's proposed starting date, duration in weeks, ending date, and percentage completion (both as planned and as achieved) for all of the major activities of the contract. The plan shall also show the amount of the total bid price (percent and actual dollars) associated with each activity. The plan will also have the progress "S" curve plotted (both as planned and as achieved).

The activities shown on the chart shall be developed by the Contractor and shall include, as a minimum, the following:

- Direct Construction Labor, separated into principal vessel areas
- Material Purchases separated into principal vessel areas
- Material Deliveries separated into principal vessel areas
- Engineering
- Construction of modules
- Test and Trials
- Delivery (If CLIN 0001AF is not exercised, this event will be omitted)
- Overhead and Profit

In addition, the following milestone events, as a minimum, shall be marked on the chart time-line:

- Award of Contract
- Notice to Proceed with "PLANNING"
- Notice to Proceed with "ENGINEERING & SCHEDULING"
- Notice To Proceed with "CONSTRUCTION, TESTING, & ACCEPTANCE AT CONTRACTOR'S FACILITY"
- Tests and Trials
- Final Inspection
- Provisional Acceptance
- Delivery (If CLIN 0001AF is not exercised, this event will be removed)
- Final Acceptance

After review, revision as necessary and approval by the COR; the plan shall be updated and submitted monthly with the Progress Payment Request.

H07 CONTRACTOR'S SAFETY PLAN

After Notice To Proceed with Line Item 0001AB, ENGINEERING & SCHEDULING, the Contractor shall submit a Safety Plan for the facility at which the work is to be performed.

The Contractor's Safety Plan shall outline the procedures used by the Contractor to ensure the safety of his employees and minimize lost-time accidents.

The Safety Plan shall identify by name and title the Contractor's Safety Officer who is responsible for enforcing the Contractor's safety rules and the Contractor's designated "Competent Person" (29 CFR 1915.7) who is responsible for testing the atmosphere in confined and enclosed spaces. In the event that the Contractor has no designated "competent person," a statement that a Marine Chemist will perform the tests and inspections that require a "competent person" shall be included with the Safety Plan, and the name of the Marine Chemist shall appear on the Subcontracting Plan (Clause H09).

H08 PROCUREMENT PLAN

After Notice To Proceed with Line Item 0001AA, PLANNING, the Contractor shall submit a Procurement Plan for the vessel.

The Procurement Plan shall identify the major or schedule controlling components and equipment in the contract, estimated delivery time for each, the selected vendor and planned date of ordering.

The Procurement Plan shall be in "spread sheet" format and will later be developed into the Material and Equipment Schedule of clause H10.

Upon written approval of the Procurement Plan by the COR, the Contractor may commence procurement of any or all of those items on the plan.

Costs for long lead items and materials which are in the accepted procurement plan must be included on the bid schedule under line item 0001AC, CONSTRUCTION, TESTING, AND ACCEPTANCE AT CONTRACTOR'S FACILITY. Progress payments will be made in accordance with Clause H20, Progress Payment Based On A Percentage Or Stage Of Completion.

H09 SUBCONTRACTING PLAN

After Notice To Proceed with line item 0001AA, PLANNING, the Contractor shall submit a Subcontracting Plan for the contract. This should not be confused with the SUBCONTRACTING PLAN required of Large Business as a part of their affirmative action responsibilities.

The Subcontracting Plan shall identify the areas or features of the contract or vessel which will be performed, all or in part by Subcontractors. The plan shall identify the scope of work, Subcontractor firm's name, and reference the Subcontractor's proposal or letter of intent.

The Contractor shall provide copies of all pre and post contract correspondence between themselves and their representatives and all potential Subcontractors when requested by the Contracting Officer's Representative.

The Subcontracting Plan shall specifically address the Contractor's plan for design and engineering.

If any part of the Contractor's engineering is to be subcontracted, the Contractor shall also submit the Subcontractor's qualifications, the scope of work and the contract, purchase order, or letter of intent.

If the engineering is to be performed by the Contractor's hired labor, the plan shall make that specifically clear. The Contractor shall provide a statement of qualifications for any "in house" engineering personnel.

All persons employed as naval architects or marine engineers, either by the Contractor or by any Subcontractor, shall be professionally competent by virtue of education, training, experience or licensing.

The Subcontracting Plan shall be in "spread sheet" format and will be incorporated into the Material & Equipment Schedule of Clause H10.

Upon written approval of the Subcontracting Plan by the Contracting Officer's Representative, the Contractor is authorized to proceed to place the subcontracts listed on the plan.

H10 MATERIALS & EQUIPMENT SCHEDULE

After Notice To Proceed with line item 0001AB, ENGINEERING & SCHEDULING, the Contractor shall develop a schedule of all items, including major stock materials (excluding nuts, bolts, gaskets, consumables, etc.), to be used in the construction of the vessel. The schedule shall be prepared in "spread sheet" format and contain the following information for the vessel:

- Component/equipment
- Quantity
- Vendor name and address
- Make, model, and options
- Drawing references (if appropriate)
- Purchase Order or Contract Number
- Scheduled order date
- Actual order date
- Scheduled (promised) receipt at shipyard
- Actual receipt at shipyard

After submittal, review, revision and approval by the COR, the schedule shall be updated and submitted to the Government monthly. Final submission to MDC shall include priced copies of all purchase orders, purchase specifications and receipts.

Upon written approval of the schedule by the Contracting Officer's Representative, the Contractor is authorized to proceed with procurement of all items and materials in the schedule.

At any time during the contract, the COR may request and the Contractor shall furnish, correspondence, telephone conversation records, priced copies of purchase orders, purchase specifications and material receipts or other records between the Contractor and the various subcontractors.

H11 SUBMITTAL SCHEDULE

After receipt of Notice To Proceed with line item 0001AA, PLANNING, the Contractor shall develop a submittal schedule for all Contractor submittals required by the contract (Refer to Clause H02).

The schedule shall be in "spread sheet" format and contain the following minimum information for the vessel:

- Drawing or calculation number (if any)
- Name or title of submittal
- Scheduled submittal date(s)
- Actual submittal date(s)
- Submittal letter number
- Reply letter number
- Reply letter date

For drawings or items with repetitive submittals (monthly, etc.) the schedule must allow for drawing review iterations or repetitive submissions.

After review, subsequent revision and approval by the COR, the schedule will be updated and submitted with the monthly Progress Payment Request for the life of the contract.

H12 DRAWING INDEX

After Notice To Proceed with line item 0001AA, PLANNING, the Contractor shall prepare an index of all drawings and calculations to be prepared by the Contractor as part of this contract. The list will be subdivided into two parts.

The first part shall list all the drawings the Contractor intends or expects to prepare during the "ENGINEERING & SCHEDULING" phase of the contract. See Clause H13.

The second part shall list all As-Built drawings. The As-Built drawings shall consist of updated and corrected originals of all the drawings prepared by the Contractor (listed in the first part of this index) plus any standard drawings or details created by the Contractor during construction.

Both parts of this index shall be complete with drawing title, the Contractor's drawing number (if any) and scheduled submittal date.

After review, revision, and approval by the COR the index will be updated and submitted monthly to the Contracting Officer's Representative.

H13 ENGINEERING & DRAWINGS

A. ENGINEERING

The Contractor will perform engineering (prepare calculations, drawings, etc.) in order to:

- Develop the Detailed Design
- Obtain regulatory body approval
- Develop detailed piping and cable routings
- Develop detailed ducting routings
- Develop shop drawings
- Develop construction details
- Prepare complete bills of materials
- Obtain COR approval for NTP with Construction
- Complete As-Built drawings

All drawings and documents prepared by the Contractor or substantively modified by the Contractor shall be forwarded to the Marine Design Center for review, comment, and acceptance.

It is the responsibility of the Contractor to schedule submission of the listed drawings/documents to allow for review by MDC, without adversely affecting the construction schedule or submittals to regulatory bodies (refer to Clause H02).

B. DRAWINGS

All drawings shall be prepared in CADD form, and shall conform to the American National Standards Institute (ANSI) Standard Y14. Drawings shall be flat, folded to 81/2" x 11" size and trimmed to within 1/2" of the outer border. Drawing size shall be format A (horizontal or vertical) or D as defined by ANSI Y14.1. In no case will drawings of any other size or format be accepted. Title blocks shall conform to ANSI dimensions and shall be submitted to MDC for approval before use. Drawings of two or more sheets shall have follow-on sheets titled according to ANSI Y14.1 for continuation sheets and shall not be separately titled.

Three copies of each drawing, calculation, report, or document shall be submitted to MDC for review. Only if appropriate numbers of copies are submitted will one copy be returned to the Contractor showing the Government review action.

If requested by the COR, one copy of each drawing or document reviewed and stamped by ABS, along with its associated ABS comment letter shall be provided to the COR.

C. DESIGN OUTLINE

The "ENGINEERING & SCHEDULING" phase design effort to complete the Detailed Design shall include the preparation of drawings, calculations, and reports that address the topics listed on the following index. Refer to Clause H03 for basic level of detail guidance for all vessel systems and refer to the specific clauses of Section C for any detailed requirements. It is acceptable to combine details and features on drawings.

DRAWING OR DOCUMENT NUMBER	TITLE	FORMAT OF DELIVERABLE
#610-C000-01	TITLE SHEET	DRAWING
#610-C000-02	DRAWING INDEX (*)	DRAWING
#610-C105-01	LINES PLAN	DRAWING
#610-C105-02	FRAMES & OFFSETS	DRAWING
#610-C115-01	WEIGHT ESTIMATE	CALCULATIONS
#610-C115-02	INCLINING EXPERIMENT	REPORT
#610-C130-01	TANK CAPACITY PLAN	DRAWING
#610-C130-02	SOUNDING TABLES (*)	TABLES
#610-C145-01	TONNAGE MEASUREMENT DIAGRAM	DRAWING
#610-C150-01	DAMAGE STABILITY	CALCULATIONS
#610-C155-01	INTACT STABILITY CALCULATIONS	
#610-C170-01	DOCKING PLAN (*)	DRAWING
#610-C180-01	NOISE & VIBRATION PLAN	REPORT
#610-C205-01	OUTBOARD PROFILE	DRAWING
#610-C215-01	GENERAL ARRANGEMENT	DRAWING
#610-C233-01	PILOTHOUSE ARRANGEMENT	DRAWING
#610-C245-01	MACHINERY ARRANGEMENT	DRAWING
#610-C255-01	CONSOLE ARRANGEMENT (*)	DRAWING

DRAWING OR DOCUMENT NUMBER	TITLE	FORMAT OF DELIVERABLE
#610-C301-01	MIDSHIP SECTION	DRAWING
#610-C301-02	INBOARD PROFILE	DRAWING
#610-C305-01	LONGITUDINAL STRUCTURE	DRAWING
#610-C305-02	TRANSVERSE FRAMING & DETAILS	DRAWING
#610-C307-01	DECK & BOTTOM STRUCTURE	DRAWING
#610-C307-02	SIDE PLATING	DRAWING
#610-C309-01	TRANSVERSE BULKHEADS	DRAWING
#610-C315-01	DECKHOUSE STRUCTURE	DRAWING
#610-C316-01	STACK CONSTRUCTION & DETAILS	DRAWING
#610-C317-01	MAST CONSTRUCTION & DETAILS	DRAWING
#610-C320-01	TANK CONSTRUCTION & DETAILS	DRAWING
#610-C325-01	SEA CHEST INSTALLATION	DRAWING
#610-C326-01	TRANSDUCER WELL INSTALLATION	DRAWING
#610-C330-01	FOUNDATIONS & MISC. DETAILS	DRAWING
#610-C330-02	ENGINE & GEAR MOUNTING DETAILS	DRAWING
#610-C399-01	STRUCTURAL CALCULATIONS	CALCULATIONS
#610-C406-01	PAINT SCHEDULE	DRAWING
#610-C410-01	H-BITT INSTALLATION & DETAILS	DRAWING
#610-C410-02	TOWKNEE INSTALLATION & DETAILS	DRAWING
#610-C410-03	RUB RAILS INSTALLATION & DETAILS	DRAWING
#610-C415-01	DOORS, WINDOWS, HATCHES & MANHOLES SCHEDULE	DRAWING
#610-C420-01	DECK FITTINGS	DRAWING
#610-C425-01	WALKWAYS, GRATING & FLOOR PLATES	DRAWING
#610-C425-02	RAILING INSTALLATION & DETAILS	DRAWING
#610-C427-01	VERTICAL & INCLINED LADDERS	DRAWING
#610-C430-01	DECK COVERINGS	DRAWING
#610-C435-01	JOINER WORK	DRAWING
#610-C436-01	INSULATION & SHEATHING	DRAWING
#610-C437-01	OUTFITTING & FURNISHINGS	DRAWING
#610-C440-01	STEWARDS OUTFIT	DRAWING
#610-C445-01	LIFESAVING & SAFETY EQUIPMENT	DRAWING
#610-C455-01	DECK CRANE FOUNDATION	DRAWING
#610-C457-01	TROLLEY BEAM INSTALLATION	DRAWING
#610-C460-01	HULL MARKINGS	DRAWING
#610-C460-02	COMMUNICATIONS MARK	DRAWING
#610-C470-01	INTERIOR COMMUNICATIONS SYSTEM	DRAWING
#610-C480-01	TELEPHONE & DATA COMMUNICATIONS	DRAWING
#610-C481-01	TELEVISION SYSTEM	DRAWING

DRAWING OR DOCUMENT NUMBER	TITLE	FORMAT OF DELIVERABLE
#610-C605-01	PROPULSION CONTROL SYSTEM SCHEMATIC	DRAWING
#610-C605-02	TORSIONAL VIBRATION ANALYSIS	REPORT
#610-C606-01	PROPELLER SIZING CALCULATIONS	CALCULATIONS
#610-C610-01	SHAFTING ARRANGEMENT & INSTALLATION DETAILS	DRAWING
#610-C610-02	STRUT INSTALLATION DETAILS	DRAWING
#610-C612-01	STEERING RUDDER INSTALLATION & DETAILS	DRAWING
#610-C612-02	FLANKING RUDDER INSTALLATION & DETAILS	DRAWING
#610-C615-01	STEERING SYSTEM	DRAWING
#610-C630-01	FUEL OIL SYSTEM	DRAWING
#610-C635-01	LUBE OIL, GEAR OIL, & HYDRAULIC OIL SERVICE SYSTEMS	DRAWING
#610-C636-01	WASTE OIL SYSTEM	DRAWING
#610-C637-01	OILY BILGE SYSTEM	DRAWING
#610-C640-01	ENGINE & GENERATOR COOLING SYSTEMS	DRAWING
#610-C650-01	ENGINE & GENERATOR EXHAUST SYSTEMS	DRAWING
#610-C660-01	BILGE & BALLAST SYSTEM	DRAWING
#610-C660-02	BILGE & BALLAST SYSTEM CALCULATIONS	CALCULATIONS
#610-C665-01	POTABLE WATER SYSTEM	DRAWING
#610-C665-02	POTABLE WATER MAKER INSTALLATION & DETAILS	DRAWING
#610-C667-01	SANITARY & SEWAGE SYSTEM	DRAWING
#610-C669-01	DRAINAGE SYSTEM	DRAWING
#610-C670-01	VENTS & SOUNDS	DRAWING
#610-C675-01	FIREMAIN	DRAWING
#610-C675-02	FIRE MONITOR SYSTEM	DRAWING
#610-C675-03	FIRE FIGHTING SYSTEM CALCULATIONS	CALCULATIONS
#610-C677-01	FIXED FIRE EXTINGUISHING SYSTEM	DRAWING
#610-C678-01	FIRE DETECTION & ALARM SYSTEM	DRAWING
#610-C679-01	FIRE CONTROL PLAN (*)	DRAWING
#610-C685-01	HEATING, VENTILATION & AC SYSTEM	DRAWING
#610-C685-02	ENGINEERING SPACES HEATING & VENTILATION	DRAWING
#610-C685-03	HVAC LOAD CALCULATIONS	CALCULATIONS
#610-C690-01	COMPRESSED AIR SYSTEM	DRAWING
#610-C692-01	GENERAL ALARM SYSTEM	DRAWING
#610-C692-02	BILGE ALARM SYSTEM	DRAWING

DRAWING OR DOCUMENT NUMBER	TITLE	FORMAT OF DELIVERABLE
#610-C710-01	AC SYSTEM LOAD ANALYSIS	DRAWING
#610-C710-02	DC SYSTEM LOAD ANALYSIS	DRAWING
#610-C715-01	FAULT CURRENT ANALYSIS	CALCULATIONS
#610-C715-02	CIRCUIT BREAKER COORDINATION STUDY	REPORT
#610-C720-01	ONE LINE DIAGRAM (AC)	DRAWING
#610-C720-02	ONE LINE DIAGRAM (DC)	DRAWING
#610-C725-01	CABLE SCHEDULE	DRAWING
#610-C725-02	VOLTAGE DROP ANALYSIS	REPORT
#610-C730-01	LIGHTING & RECEPTACLES PLAN	DRAWING
#610-C730-02	NAVIGATION LIGHTING ARRANGEMENT	DRAWING
#610-C740-01	SWITCHBOARD & POWER CONTROL	DRAWING
#610-C760-01	SHORE POWER & OFF-VESSEL SERVICES	DRAWING

* To be developed during the "Construction, Testing & Acceptance at Contractor's Facility" phase of the Contract.

If optional line item 0001AD, Floating Deckhouse & Noise Criteria is exercised, the additional drawings and documents shall also be developed as part of the detailed design:

DRAWING OR DOCUMENT NUMBER	TITLE	FORMAT OF DELIVERABLE
#610-C115-03	FLOATING DECKHOUSE WEIGHT ESTIMATE	CALCULATIONS
#610-C313-01	FLOATING DECKHOUSE INSTALLATION & DETAILS	DRAWING
#610-C313-02	FLOATING DECKHOUSE DESIGN & CALCULATIONS	CALCULATIONS
#610-C313-03	ISOLATOR SELECTION & FOUNDATION CALCULATIONS	CALCULATIONS

H14 "AS-BUILT" DRAWINGS

In order to provide a record of the "As-Built" vessel, the Contractor shall update the Detailed Design drawings, calculations, reports, and documents to clearly show the construction, details and systems of the vessel at the time of Final Acceptance.

All of the drawings, reports and documents shown on the Submittal Schedule required by Clause H11 and the Drawing Index required by Clause H12 will be updated and corrected to form an "As-Built" record of the vessel.

The Government shall have unlimited use of the drawings listed on the drawing index.

The "As-Built" materials for the vessel shall be delivered as follows:

1. Prior to the Tests and Trials of the vessel (see Section E), the Contractor shall submit one set of prints of the "As-Built" drawings for review and approval.

2. Prior to Provisional Acceptance, the Contractor shall provide the following:

- Three sets of black or blue line prints of all "As-Built" drawings.

- One set of high quality (original) Mylar reproducibles of all "As-Built" drawings.

- Four sets of electronic "As-Built" drawings. Two sets of files shall be provided on DVD-ROM. The other two sets of files shall be provided on 4-3/4" 650 MB 74 min digital compact disk (CD). All files shall be provided in Raster Image. Each drawing sheet shall be a separate electronic file with a filename, which conforms to the file naming convention below, and shall be provided in Tagged Image File Format ("*.tif" or "*.tiff" file format). Compressed utilities such as PKZIP® may not be used.

- Four sets of electronic files of all calculations and reports. Two sets of files shall be provided on DVD-ROM. The other two sets of files shall be provided on 4-3/4" 650 MB 74 min digital compact disk (CD). All files shall be provided in Adobe Acrobat "*.pdf" file format. Each set of calculations or complete report shall be a separate electronic file with a filename that conforms to the file naming convention below. Compression utilities such as PKZIP® may not be used.

- Four sets of electronic files of all CADD prepared drawings. Two sets of files shall be provided on DVD-ROM. The other two sets of files shall be provided on 4-3/4" 650 MB 74 min digital compact disk (CD). All files shall be provided in AutoCAD 2000 "*.dwg" file format or higher. Each drawing sheet shall be a separate electronic file with a filename that confirms to the file naming convention below. Compression utilities such as PKZIP® may not be used.

3. Files furnished on CD and DVD-ROM shall be encased in standard plastic jewel boxes. Slim line jewel cases are not acceptable. Each box shall be labeled on the cover and an index, in numerical order by filename, shall be furnished inside the protective cover.

4. Each CD and DVD-ROM shall be labeled with the contract title, contract number, and the general content of the disk.

FILE NAMING CONVENTION:

Files, drawings, calculations and reports shall be named based on the hull number, design phase (A=Concept, B=Preliminary, C=Detailed, D=As-Built, E through Z=Post delivery engineering efforts), WBS number, task number (a discrete system or component within a single WBS), sheet number, revision, and file extension for electronic files (".tif" ".tiff" ".pdf" ".dwg"), as applicable. The following example will illustrate the naming convention:

For the third sheet and third revision of a multi-sheet electrical one-line diagram (for the purposes of this example this is for the DC system and is identified as the 2nd task of the electrical system one-line diagrams) concept drawing for hull number 610, the document name would be:

Hull Number	610
Design Phase	A
WBS Number	720
Task Number	02
Sheet Number	03
Revision	C
File extension	.dwg

Drawing Number:	**610-A720-02-sheet 3 Revision C**
AutoCAD Filename:	**610-A720-02-03C.dwg**
Raster Image Filename:	**610-A720-02-03C.tif**

H15 SUBSTITUTIONS

"Substitution" as used in this clause, is an administrative action, not resulting in a contract change of cost or time.

Prior to issuance of a NTP with "Construction, Testing and Acceptance at the Contractor's Facility," the Contractor shall prepare and submit a comprehensive list and analysis of any Contractor proposed substitutions of the equipment and materials required in the contract.

The Substitution List shall be limited to equipment and materials specifically required by the contract. Equipment and Materials where the Contractor has selection responsibility (i.e. "similar to") are not to be included in the list.

Each proposed substitution shall be accompanied with a detailed analysis and comparison of the equipment or materials specified and the equipment or materials proposed, including features, dimensions, performance characteristics, benefit to the Government, and the compelling reason why the substitution should be made. In the absence of compelling reasons for making the substitution, the Contractor's proposal may be denied.

Should the substitution be accepted, the Contractor shall be responsible for integrating the substitution into the design at no increase in contract cost or no extension of contract completion. Such modifications to the design must be completed, submitted for approval, revised as necessary and accepted by the COR prior to issuing a NTP for Construction, Testing and Acceptance at the Contractor's Facility.

The Contractor bears ultimate responsibility for satisfactory performance of all systems impacted or affected by an accepted substitution as well as the operation of the completed vessel, as affected by the substitution.

Once a NTP with Construction, Testing and Acceptance at the Contractor's Facility has been issued, substitutions will not be considered.

H16 MANUFACTURER OR SUBCONTRACTOR DRAWINGS & MANUALS

For the vessel, the Contractor shall provide four complete sets of drawings and manuals for each piece of machinery and equipment provided by the Contractor; that clearly describe the operation, construction, maintenance, repair, adjustment, lubrication, parts lists and "trouble shooting" of every item of machinery and piece of equipment. This shall include Detailed Fabrication Drawings where they exist.

Manuals shall be in the English language with all dimensions in the foot-pound-second systems of units. Manuals shall be bound in hard covers of durable materials.

Manufacturer's or Subcontractor's drawings may be included in the manual but must be folded to page size.

Drawings not suitable for inclusion in the manuals must be considered as engineering and design drawings and shall be prepared and submitted in accordance with the requirements of Clause H13, Engineering & Drawings.

At least 30 days prior to Final Inspection of the vessel, one set of the manuals shall be submitted to the Contracting Officer's Representative for review, comment and/or approval. This set of manuals will be returned to the Contractor with approval or comments.

Final submittal of the manuals shall consist of three sets of the manuals and must be completed prior to Provisional Acceptance of the vessel.

If photocopies (Xerox or similar) of parts lists, text, diagrams, etc., are furnished, one of the sets shall be a "Master" and must be made up of all "original" sheets and be clearly identified as the "Master" copy. Photocopies will be clear with high black/white contrast, sharp lines, full sheet reproduction, and no background shadow or clutter.

Where catalog "cut-sheets" are provided, all information not pertinent to the equipment or machinery provided shall be obliterated.

H17 NOT USED

H18 RECORD PHOTOGRAPHS

A. CONSTRUCTION PROGRESS PHOTOGRAPHS

The Contractor shall provide monthly photographs deliverable in digital format. The photographs shall document the construction progress, the launching, and tests and trials of the vessel.

The photographs shall be provided via e-mail. Photographs shall be JPG file format of at least SVGA Resolution, 24-bit color depth, and at a compression ratio no greater than 25% (75% Quality).

For the vessel, approximately 15 or 20 photographs shall be provided monthly. The quantity of photographs shall be commensurate with the level of production.

B. FINAL PHOTOGRAPHS

1. Digital Photography Requirements

For the vessel, a minimum of 50 different digital photograph interior shots showing the final condition of all deckhouse and machinery spaces of the vessel shall be provided by the Contractor. The interior shots shall be taken from different angles in each space to show the equipment arrangement and space layout. The digital photograph files for the vessel shall be provided on 4-3/4" 650 MB 74 min digital compact disk (CD). Two complete sets of the photos shall be provided to the Government.

2. Color Film Photography Requirements

The Contractor shall furnish the services of a professional photographer to take regular color photographs of the completed vessel.

For the vessel, a minimum of 10 different exterior photographs, using color photograph film, shall be taken to include:

a. Profile view of each side
b. Profile view of each end
c. Profile views of the vessel corner
d. Plan or overhead view of the vessel

For the vessel, the Contractor shall provide one negative and ten prints for each of two exterior shots, which will be selected by the COR upon review of shipyard exterior photos. Color prints shall be 8 inch x 10 inch. (Total of 20 prints).

For the vessel, the COR shall select two shots from the exterior view photos, which shall be custom printed in 11 inches x 14 inches size, professionally mounted, double matted and framed under clear glass in suitable wooden frame. Two sets of each picture shall be furnished to the Contracting Officer's Representative (total of four matted and framed photos), for the vessel.

H19 GOVERNMENT PROPERTY

All Government-Furnished equipment and equipment for which the Government has made payment or partial payment shall be considered Government Property.

The Contractor shall accept all risk for Government property in his possession.

The Contractor shall maintain an inventory of all Government Property, update and submit the inventory monthly.

All Government Property shall be stored in enclosed, weather tight secure, warehouse buildings. Security shall consist of restricted access, locked and fenced storage. Warehouse buildings shall be heated above freezing and ventilated to prevent condensation or sweating.

H20 PROGRESS PAYMENT BASED ON PERCENTAGE OR STAGE OF COMPLETION

The Government shall pay the Contractor the contract price as provided in this contract.

The Government shall make progress payments monthly as the work proceeds, or at more frequent intervals as determined by the Contracting Officer, on estimates of work accomplished which meets standards of quality established under the contract, as accepted by the Contracting Officer. If requested by the Contracting Officer, the Contractor shall furnish a breakdown of the total contract price showing the amount included therein for each principal category of work, in such detail as requested, to provide a basis for determining progress payments. In the preparation of estimates, the Contracting Officer may authorize payment for material delivered to the site and at locations other than the site may also be taken into consideration if---

- Consideration is specifically authorized by this contract; and
- The Contractor furnishes satisfactory evidence that it has acquired title to such material and that the material will be used to perform this contract.

If the Contracting Officer finds that satisfactory progress was achieved during any period for which progress payment is to be made, the Contracting Officer shall authorize payment to be made in full. However, if satisfactory progress has not been made, the Contracting Officer may retain a maximum of fifteen percent (15%) of the amount of the payment until satisfactory progress is achieved. When the work is substantially complete, the Contracting Officer may retain from previously withheld funds and future progress payments that amount the Contracting Officer considers adequate for protection of the Government and shall release to the Contractor all remaining withheld funds.

All material and work covered by progress payments made shall, at the time of payment, become the sole property of the Government, but this shall not be considered as---

- Relieving the Contractor from the sole responsibility for all material and work upon which payments have been made or the restoration of any damaged work; or
- Waiving the right of the Government to require the fulfillment of all of the terms of the contract.

In making these progress payments, the Government shall, upon request, reimburse the Contractor for the amount of premiums paid for performance and payment bonds (including co-insurance and reinsurance agreements, when applicable) after the Contractor has furnished evidence of full payment to the surety. The retainage provision preceding shall not apply to that portion of progress payments attributed to bond premiums.

The Government shall pay the amount due the Contractor under this contract after---

- Completion and acceptance of all work; and

- Presentation of a properly executed voucher.

Notwithstanding any other provision of this contract, progress payments shall not exceed eighty percent (80%) on work accomplished on undefinitized contract actions. A "contract action" is any action resulting in a contract as defined in FAR Subpart 2.1, including contract modifications for additional supplies or services, but not including contract modifications that are within the scope and under the terms of the contract, such as contract modifications issued pursuant to the Changes Clause, or funding and other administrative changes.

THIS PAGE INTENTIONALLY LEFT BLANK

Section I - Contract Clauses

52.202-1	Definitions	DEC 2001
52.203-3	Gratuities	APR 1984
52.203-5	Covenant Against Contingent Fees	APR 1984
52.203-6	Restrictions On Subcontractor Sales To The Government	JUL 1995
52.203-7	Anti-Kickback Procedures	JUL 1995
52.203-8	Cancellation, Rescission, and Recovery of Funds for Illegal or Improper Activity	JAN 1997
52.203-10	Price Or Fee Adjustment For Illegal Or Improper Activity	JAN 1997
52.203-12	Limitation On Payments To Influence Certain Federal Transactions	JUN 2003
52.204-4	Printed or Copied Double-Sided on Recycled Paper	AUG 2000
52.209-6	Protecting the Government's Interest When Subcontracting With Contractors Debarred, Suspended, or Proposed for Debarment	JUL 1995
52.211-5	Material Requirements	AUG 2000
52.214-26	Audit and Records--Sealed Bidding	OCT 1997
52.214-27	Price Reduction for Defective Cost or Pricing Data - Modifications - Sealed Bidding	OCT 1997
52.214-28	Subcontracting Cost Or Pricing Data--Modifications--Sealed Bidding	OCT 1997
52.214-29	Order Of Precedence--Sealed Bidding	JAN 1986
52.217-7	Option for Increased Quantity-Separately Priced Line Items	MAR 1989
52.219-8	Utilization of Small Business Concerns	OCT 2000
52.219-9 Alt I	Small Business Subcontracting Plan (Jan 2002) Alternate I	OCT 2001
52.219-16	Liquidated Damages-Subcontracting Plan	JAN 1999
52.222-1	Notice To The Government Of Labor Disputes	FEB 1997
52.222-20	Walsh-Healey Public Contracts Act	DEC 1996
52.222-26	Equal Opportunity	APR 2002
52.222-35	Equal Opportunity For Special Disabled Veterans, Veterans of the Vietnam Era, and Other Eligible Veterans	DEC 2001
52.222-36	Affirmative Action For Workers With Disabilities	JUN 1998
52.222-37	Employment Reports On Special Disabled Veterans, Veterans Of The Vietnam Era, and Other Eligible Veterans	DEC 2001
52.223-6	Drug-Free Workplace	MAY 2001
52.223-14	Toxic Chemical Release Reporting	AUG 2003
52.225-13	Restrictions on Certain Foreign Purchases	JAN 2004
52.226-1	Utilization Of Indian Organizations And Indian-Owned Economic Enterprises	JUN 2000
52.227-1	Authorization and Consent	JUL 1995
52.227-2	Notice And Assistance Regarding Patent And Copyright Infringement	AUG 1996
52.227-3	Patent Indemnity	APR 1984
52.228-1	Bid Guarantee	SEP 1996
52.228-2	Additional Bond Security	OCT 1997
52.228-11	Pledges Of Assets	FEB 1992
52.228-14	Irrevocable Letter of Credit	DEC 1999
52.228-16	Performance and Payment Bonds--Other Than Construction	JUL 2000
52.229-3	Federal, State And Local Taxes	APR 2003

52.232-11	Extras	APR 1984
52.232-17	Interest	JUN 1996
52.232-23	Assignment Of Claims	JAN 1986
52.232-34	Payment By Electronic Funds Transfer--Other Than Central Contractor Registration	MAY 1999
52.233-1	Disputes	JUL 2002
52.233-3	Protest After Award	AUG 1996
52.239-1	Privacy or Security Safeguards	AUG 1996
52.242-13	Bankruptcy	JUL 1995
52.242-17	Government Delay Of Work	APR 1984
52.243-1	Changes--Fixed Price	AUG 1987
52.244-2	Subcontracts	AUG 1998
52.245-2	Government Property (Fixed Price Contracts)	JUN 2003
52.246-18 Alt IV	Warranty Of Supplies Of A Complex Nature (May 2001) - Alternate IV	APR 1984
52.246-24	Limitation Of Liability--High-Value Items	FEB 1997
52.248-1	Value Engineering	FEB 2000
52.249-2	Termination For Convenience Of The Government (Fixed-Price)	SEP 1996
52.249-8	Default (Fixed-Price Supply & Service)	APR 1984
52.253-1	Computer Generated Forms	JAN 1991
252.201-7000	Contracting Officer's Representative	DEC 1991
252.203-7001	Prohibition On Persons Convicted of Fraud or Other Defense-Contract-Related Felonies	MAR 1999
252.203-7002	Display Of DOD Hotline Poster	DEC 1991
252.204-7000	Disclosure Of Information	DEC 1991
252.204-7003	Control Of Government Personnel Work Product	APR 1992
252.204-7004 Alt A	Required Central Contractor Registration Alternate A	NOV 2003
252.209-7000	Acquisition From Subcontractors Subject To On-Site Inspection Under The Intermediate Range Nuclear Forces (INF) Treaty	NOV 1995
252.209-7004	Subcontracting With Firms That Are Owned or Controlled By The Government of a Terrorist Country	MAR 1998
252.223-7004	Drug Free Work Force	SEP 1988
252.225-7001	Buy American Act And Balance Of Payments Program	APR 2003
252.225-7002	Qualifying Country Sources As Subcontractors	APR 2003
252.225-7013	Duty-Free Entry	JAN 2004
252.225-7031	Secondary Arab Boycott Of Israel	APR 2003
252.227-7013	Rights in Technical Data--Noncommercial Items	NOV 1995
252.227-7030	Technical Data--Withholding Of Payment	MAR 2000
252.227-7036	Declaration of Technical Data Conformity	JAN 1997
252.227-7037	Validation of Restrictive Markings on Technical Data	SEP 1999
252.231-7000	Supplemental Cost Principles	DEC 1991
252.232-7003	Electronic Submission of Payment Requests	JAN 2004
252.243-7001	Pricing Of Contract Modifications	DEC 1991
252.243-7002	Requests for Equitable Adjustment	MAR 1998
252.247-7023	Transportation of Supplies by Sea	MAY 2002
252.247-7024	Notification Of Transportation Of Supplies By Sea	MAR 2000

52.202-1 DEFINITIONS (DEC 2001)

(a) Agency head or head of the agency means the Secretary (Attorney General, Administrator, Governor, Chairperson, or other chief official, as appropriate) of the agency, unless otherwise indicated, including any deputy or assistant chief official of the executive agency.

(b) Commercial component means any component that is a commercial item.

(c) Commercial item means--

(1) Any item, other than real property, that is of a type customarily used by the general public or by non-governmental entities for purposes other than governmental purposes, and that--

(i) Has been sold, leased, or licensed to the general public; or

(ii) Has been offered for sale, lease, or license to the general public;

(2) Any item that evolved from an item described in paragraph (c)(1) of this clause through advances in technology or performance and that is not yet available in the commercial marketplace, but will be available in the commercial marketplace in time to satisfy the delivery requirements under a Government solicitation;

(3) Any item that would satisfy a criterion expressed in paragraphs (c)(1) or (c)(2) of this clause, but for--

(i) Modifications of a type customarily available in the commercial marketplace; or

(ii) Minor modifications of a type not customarily available in the commercial marketplace made to meet Federal Government requirements. “Minor” modifications means modifications that do not significantly alter the nongovernmental function or essential physical characteristics of an item or component, or change the purpose of a process. Factors to be considered in determining whether a modification is minor include the value and size of the modification and the comparative value and size of the final product. Dollar values and percentages may be used as guideposts, but are not conclusive evidence that a modification is minor;

(4) Any combination of items meeting the requirements of paragraphs (c)(1), (2), (3), or (5) of this clause that are of a type customarily combined and sold in combination to the general public;

(5) Installation services, maintenance services, repair services, training services, and other services if--

(i) Such services are procured for support of an item referred to in paragraph (c)(1), (2), (3), or (4) of this definition, regardless of whether such services are provided by the same source or at the same time as the item; and

(ii) The source of such services provides similar services contemporaneously to the general public under terms and conditions similar to those offered to the Federal Government;

(6) Services of a type offered and sold competitively in substantial quantities in the commercial marketplace based on established catalog or market prices for specific tasks performed under standard commercial terms and conditions. This does not include services that are sold based on hourly rates without an established catalog or market price for a specific service performed. For purposes of these services--

(i) Catalog price means a price included in a catalog, price list, schedule, or other form that is regularly maintained by the manufacturer or vendor, is either published or otherwise available for inspection by customers, and states prices at which sales are currently, or were last, made to a significant number of buyers constituting the general public; and

(ii) Market prices means current prices that are established in the course of ordinary trade between buyers and sellers free to bargain and that can be substantiated through competition or from sources independent of the offerors.

(7) Any item, combination of items, or service referred to in subparagraphs (c)(1) through (c)(6), notwithstanding the fact that the item, combination of items, or service is transferred between or among separate divisions, subsidiaries, or affiliates of a Contractor; or

(8) A nondevelopmental item, if the procuring agency determines the item was developed exclusively at private expense and sold in substantial quantities, on a competitive basis, to multiple State and local Governments.

(d) Component means any item supplied to the Government as part of an end item or of another component, except that for use in 52.225-9, and 52.225-11 see the definitions in 52.225-9(a) and 52.225-11(a).

(e) Contracting Officer means a person with the authority to enter into, administer, and/or terminate contracts and make related determinations and findings. The term includes certain authorized representatives of the Contracting Officer acting within the limits of their authority as delegated by the Contracting Officer.

(f) Nondevelopmental item means--

(1) Any previously developed item of supply used exclusively for governmental purposes by a Federal agency, a State or local government, or a foreign government with which the United States has a mutual defense cooperation agreement;

(2) Any item described in paragraph (f)(1) of this definition that requires only minor modification or modifications of a type customarily available in the commercial marketplace in order to meet the requirements of the procuring department or agency; or

(3) Any item of supply being produced that does not meet the requirements of paragraph (f)(1) or (f)(2) solely because the item is not yet in use.

(g) "Contracting Officer" means a person with the authority to enter into, administer, and/or terminate contracts and make related determinations and findings. The term includes certain authorized representatives of the Contracting Officer acting within the limits of their authority as delegated by the Contracting Officer.

(h) Except as otherwise provided in this contract, the term "subcontracts" includes, but is not limited to, purchase orders and changes and modifications to purchase orders under this contract.

(End of clause)

52.203-3 GRATUITIES (APR 1984)

(a) The right of the Contractor to proceed may be terminated by written notice if, after notice and hearing, the agency head or a designee determines that the Contractor, its agent, or another representative--

(1) Offered or gave a gratuity (e.g., an entertainment or gift) to an officer, official, or employee of the Government; and

(2) Intended, by the gratuity, to obtain a contract or favorable treatment under a contract.

(b) The facts supporting this determination may be reviewed by any court having lawful jurisdiction.

(c) If this contract is terminated under paragraph (a) of this clause, the Government is entitled--

(1) To pursue the same remedies as in a breach of the contract; and

(2) In addition to any other damages provided by law, to exemplary damages of not less than 3 nor more than 10 times the cost incurred by the Contractor in giving gratuities to the person concerned, as determined by the agency head or a designee. (This subparagraph (c)(2) is applicable only if this contract uses money appropriated to the Department of Defense.)

(d) The rights and remedies of the Government provided in this clause shall not be exclusive and are in addition to any other rights and remedies provided by law or under this contract.

(End of clause)

52.203-5 COVENANT AGAINST CONTINGENT FEES (APR 1984)

(a) The Contractor warrants that no person or agency has been employed or retained to solicit or obtain this contract upon an agreement or understanding for a contingent fee, except a bona fide employee or agency. For breach or violation of this warranty, the Government shall have the right to annul this contract without liability or, in its discretion, to deduct from the contract price or consideration, or otherwise recover, the full amount of the contingent fee.

(b) "Bona fide agency," as used in this clause, means an established commercial or selling agency, maintained by a contractor for the purpose of securing business, that neither exerts nor proposes to exert improper influence to solicit or obtain Government contracts nor holds itself out as being able to obtain any Government contract or contracts through improper influence.

"Bona fide employee," as used in this clause, means a person, employed by a contractor and subject to the contractor's supervision and control as to time, place, and manner of performance, who neither exerts nor proposes to exert improper influence to solicit or obtain Government contracts nor holds out as being able to obtain any Government contract or contracts through improper influence.

"Contingent fee," as used in this clause, means any commission, percentage, brokerage, or other fee that is contingent upon the success that a person or concern has in securing a Government contract.

"Improper influence," as used in this clause, means any influence that induces or tends to induce a Government employee or officer to give consideration or to act regarding a Government contract on any basis other than the merits of the matter.

(End of clause)

52.203-6 RESTRICTIONS ON SUBCONTRACTOR SALES TO THE GOVERNMENT (JUL 1995)

(a) Except as provided in (b) of this clause, the Contractor shall not enter into any agreement with an actual or prospective subcontractor, nor otherwise act in any manner, which has or may have the effect of restricting sales by such subcontractors directly to the Government of any item or process (including computer software) made or furnished by the subcontractor under this contract or under any follow-on production contract.

(b) The prohibition in (a) of this clause does not preclude the Contractor from asserting rights that are otherwise authorized by law or regulation.

(c) The Contractor agrees to incorporate the substance of this clause, including this paragraph (c), in all subcontracts under this contract which exceed $100,000.

52.203-7 ANTI-KICKBACK PROCEDURES. (JUL 1995)

(a) Definitions.

"Kickback," as used in this clause, means any money, fee, commission, credit, gift, gratuity, thing of value, or compensation of any kind which is provided, directly or indirectly, to any prime Contractor, prime Contractor employee, subcontractor, or subcontractor employee for the purpose of improperly obtaining or rewarding favorable treatment in connection with a prime contract or in connection with a subcontract relating to a prime contract.

"Person," as used in this clause, means a corporation, partnership, business association of any kind, trust, joint-stock company, or individual.

"Prime contract," as used in this clause, means a contract or contractual action entered into by the United States for the purpose of obtaining supplies, materials, equipment, or services of any kind.

"Prime Contractor," as used in this clause, means a person who has entered into a prime contract with the United States.

"Prime Contractor employee," as used in this clause, means any officer, partner, employee, or agent of a prime Contractor.

"Subcontract," as used in this clause, means a contract or contractual action entered into by a prime Contractor or subcontractor for the purpose of obtaining supplies, materials, equipment, or services of any kind under a prime contract.

"Subcontractor," as used in this clause, (1) means any person, other than the prime Contractor, who offers to furnish or furnishes any supplies, materials, equipment, or services of any kind under a prime contract or a subcontract entered into in connection with such prime contract, and (2) includes any person who offers to furnish or furnishes general supplies to the prime Contractor or a higher tier subcontractor.

"Subcontractor employee," as used in this clause, means any officer, partner, employee, or agent of a subcontractor.

(b) The Anti-Kickback Act of 1986 (41 U.S.C. 51-58) (the Act), prohibits any person from -

(1) Providing or attempting to provide or offering to provide any kickback;

(2) Soliciting, accepting, or attempting to accept any kickback; or

(3) Including, directly or indirectly, the amount of any kickback in the contract price charged by a prime Contractor to the United States or in the contract price charged by a subcontractor to a prime Contractor or higher tier subcontractor.

(c)(1) The Contractor shall have in place and follow reasonable procedures designed to prevent and detect possible violations described in paragraph (b) of this clause in its own operations and direct business relationships.

(2) When the Contractor has reasonable grounds to believe that a violation described in paragraph (b) of this clause may have occurred, the Contractor shall promptly report in writing the possible violation. Such reports shall be made to the inspector general of the contracting agency, the head of the contracting agency if the agency does not have an inspector general, or the Department of Justice.

(3) The Contractor shall cooperate fully with any Federal agency investigating a possible violation described in paragraph (b) of this clause.

(4) The Contracting Officer may (i) offset the amount of the kickback against any monies owed by the United States under the prime contract and/or (ii) direct that the Prime Contractor withhold, from sums owed a subcontractor

under the prime contract, the amount of any kickback. The Contracting Officer may order the monies withheld under subdivision (c)(4)(ii) of this clause be paid over to the Government unless the Government has already offset those monies under subdivision (c)(4)(i) of this clause. In either case, the Prime Contractor shall notify the Contracting Officer when the monies are withheld.

(5) The Contractor agrees to incorporate the substance of this clause, including this subparagraph (c)(5) but excepting subparagraph (c)(1), in all subcontracts under this contract which exceed $100,000.

52.203-8 CANCELLATION, RESCISSION, AND RECOVERY OF FUNDS FOR ILLEGAL OR IMPROPER ACTIVITY (JAN 1997)

(a) If the Government receives information that a contractor or a person has engaged in conduct constituting a violation of subsection (a), (b), (c), or (d) of Section 27 of the Office of Federal Procurement Policy Act (41 U.S.C. 423) (the Act), as amended by section 4304 of the 1996 National Defense Authorization Act for Fiscal Year 1996 (Pub. L. 104-106), the Government may--

(1) Cancel the solicitation, if the contract has not yet been awarded or issued; or

(2) Rescind the contract with respect to which--

(i) The Contractor or someone acting for the Contractor has been convicted for an offense where the conduct constitutes a violation of subsection 27(a) or (b) of the Act for the purpose of either--

(A) Exchanging the information covered by such subsections for anything of value; or

(B) Obtaining or giving anyone a competitive advantage in the award of a Federal agency procurement contract; or

(ii) The head of the contracting activity has determined, based upon a preponderance of the evidence, that the Contractor or someone acting for the Contractor has engaged in conduct constituting an offense punishable under subsections 27(e)(1) of the Act.

(b) If the Government rescinds the contract under paragraph (a) of this clause, the Government is entitled to recover, in addition to any penalty prescribed by law, the amount expended under the contract.

(c) The rights and remedies of the Government specified herein are not exclusive, and are in addition to any other rights and remedies provided by law, regulation, or under this contract.

(End of clause)

52.203-10 PRICE OR FEE ADJUSTMENT FOR ILLEGAL OR IMPROPER ACTIVITY (JAN 1997)

(a) The Government, at its election, may reduce the price of a fixed-price type contract and the total cost and fee under a cost-type contract by the amount of profit or fee determined as set forth in paragraph (b) of this clause if the head of the contracting activity or designee determines that there was a violation of subsection 27 (a), (b), or (c) of the Office of Federal Procurement Policy Act, as amended (41 U.S.C. 423), as implemented in section 3.104 of the Federal Acquisition Regulation.

(b) The price or fee reduction referred to in paragraph (a) of this clause shall be--

(1) For cost-plus-fixed-fee contracts, the amount of the fee specified in the contract at the time of award;

(2) For cost-plus-incentive-fee contracts, the target fee specified in the contract at the time of award, notwithstanding any minimum fee or "fee floor" specified in the contract;

(3) For cost-plus-award-fee contracts--

(i) The base fee established in the contract at the time of contract award;

(ii) If no base fee is specified in the contract, 30 percent of the amount of each award fee otherwise payable to the Contractor for each award fee evaluation period or at each award fee determination point.

(4) For fixed-price-incentive contracts, the Government may--

(i) Reduce the contract target price and contract target profit both by an amount equal to the initial target profit specified in the contract at the time of contract award; or

(ii) If an immediate adjustment to the contract target price and contract target profit would have a significant adverse impact on the incentive price revision relationship under the contract, or adversely affect the contract financing provisions, the Contracting Officer may defer such adjustment until establishment of the total final price of the contract. The total final price established in accordance with the incentive price revision provisions of the contract shall be reduced by an amount equal to the initial target profit specified in the contract at the time of contract award and such reduced price shall be the total final contract price.

(5) For firm-fixed-price contracts, by 10 percent of the initial contract price or a profit amount determined by the Contracting Officer from records or documents in existence prior to the date of the contract award.

(c) The Government may, at its election, reduce a prime contractor's price or fee in accordance with the procedures of paragraph (b) of this clause for violations of the Act by its subcontractors by an amount not to exceed the amount of profit or fee reflected in the subcontract at the time the subcontract was first definitively priced.

(d) In addition to the remedies in paragraphs (a) and (c) of this clause, the Government may terminate this contract for default. The rights and remedies of the Government specified herein are not exclusive, and are in addition to any other rights and remedies provided by law or under this contract.

(End of clause)

52.203-12 LIMITATION ON PAYMENTS TO INFLUENCE CERTAIN FEDERAL TRANSACTIONS (JUN 2003)

(a) Definitions.

"Agency," as used in this clause, means executive agency as defined in 2.101.

"Covered Federal action," as used in this clause, means any of the following Federal actions:

(1) The awarding of any Federal contract.

(2) The making of any Federal grant.

(3) The making of any Federal loan.

(4) The entering into of any cooperative agreement.

(5) The extension, continuation, renewal, amendment, or modification of any Federal contract, grant, loan, or cooperative agreement.

"Indian tribe" and "tribal organization," as used in this clause, have the meaning provided in section 4 of the Indian Self-Determination and Education Assistance Act (25 U.S.C. 450B) and include Alaskan Natives.

"Influencing or attempting to influence," as used in this clause, means making, with the intent to influence, any communication to or appearance before an officer or employee of any agency, a Member of Congress, an officer or employee of Congress, or an employee of a Member of Congress in connection with any covered Federal action.

"Local government," as used in this clause, means a unit of government in a State and, if chartered, established, or otherwise recognized by a State for the performance of a governmental duty, including a local public authority, a special district, an intrastate district, a council of governments, a sponsor group representative organization, and any other instrumentality of a local government.

"Officer or employee of an agency," as used in this clause, includes the following individuals who are employed by an agency:

(1) An individual who is appointed to a position in the Government under Title 5, United States Code, including a position under a temporary appointment.

(2) A member of the uniformed services, as defined in subsection 101(3),Title 37, United States Code.

(3) A special Government employee, as defined in section 202, Title 18, United States Code.

(4) An individual who is a member of a Federal advisory committee, as defined by the Federal Advisory Committee Act, Title 5, United States Code, appendix 2.

"Person," as used in this clause, means an individual, corporation, company, association, authority, firm, partnership, society, State, and local government, regardless of whether such entity is operated for profit, or not for profit. This term excludes an Indian tribe, tribal organization, or any other Indian organization with respect to expenditures specifically permitted by other Federal law.

"Reasonable compensation," as used in this clause, means, with respect to a regularly employed officer or employee of any person, compensation that is consistent with the normal compensation for such officer or employee for work that is not furnished to, not funded by, or not furnished in cooperation with the Federal Government.

"Reasonable payment," as used in this clause, means, with respect to professional and other technical services, a payment in an amount that is consistent with the amount normally paid for such services in the private sector.

"Recipient," as used in this clause, includes the Contractor and all subcontractors. This term excludes an Indian tribe, tribal organization, or any other Indian organization with respect to expenditures specifically permitted by other Federal law.

"Regularly employed," as used in this clause, means, with respect to an officer or employee of a person requesting or receiving a Federal contract, an officer or employee who is employed by such person for at least 130 working days within 1 year immediately preceding the date of the submission that initiates agency consideration of such person for receipt of such contract. An officer or employee who is employed by such person for less than 130 working days within 1 year immediately preceding the date of the submission that initiates agency consideration of such person shall be considered to be regularly employed as soon as he or she is employed by such person for 130 working days.

State, as used in this clause, means a State of the United States, the District of Columbia, or an outlying area of the United States, an agency or instrumentality of a State, and multi-State, regional, or interstate entity having governmental duties and powers.

(b) Prohibitions.

(1) Section 1352 of Title 31, United States Code, among other things, prohibits a recipient of a Federal contract, grant, loan, or cooperative agreement from using appropriated funds to pay any person for influencing or attempting to influence an officer or employee of any agency, a Member of Congress, an officer or employee of Congress, or an employee of a Member of Congress in connection with any of the following covered Federal actions: the awarding of any Federal contract; the making of any Federal grant; the making of any Federal loan; the entering into of any cooperative agreement; or the modification of any Federal contract, grant, loan, or cooperative agreement.

(2) The Act also requires Contractors to furnish a disclosure if any funds other than Federal appropriated funds (including profit or fee received under a covered Federal transaction) have been paid, or will be paid, to any person for influencing or attempting to influence an officer or employee of any agency, a Member of Congress, an officer or employee of Congress, or an employee of a Member of Congress in connection with a Federal contract, grant, loan, or cooperative agreement.

(3) The prohibitions of the Act do not apply under the following conditions:

(i) Agency and legislative liaison by own employees.

(A) The prohibition on the use of appropriated funds, in subparagraph (b)(1) of this clause, does not apply in the case of a payment of reasonable compensation made to an officer or employee of a person requesting or receiving a covered Federal action if the payment is for agency and legislative liaison activities not directly related to a covered Federal action.

(B) For purposes of subdivision (b)(3)(i)(A) of this clause, providing any information specifically requested by an agency or Congress is permitted at any time.

(C) The following agency and legislative liaison activities are permitted at any time where they are not related to a specific solicitation for any covered Federal action:

(1) Discussing with an agency the qualities and characteristics (including individual demonstrations) of the person's products or services, conditions or terms of sale, and service capabilities.

(2) Technical discussions and other activities regarding the application or adaptation of the person's products or services for an agency's use.

(D) The following agency and legislative liaison activities are permitted where they are prior to formal solicitation of any covered Federal action--

(1) Providing any information not specifically requested but necessary for an agency to make an informed decision about initiation of a covered Federal action;

(2) Technical discussions regarding the preparation of an unsolicited proposal prior to its official submission; and

(3) Capability presentations by persons seeking awards from an agency pursuant to the provisions of the Small Business Act, as amended by Pub. L. 95-507, and subsequent amendments.

(E) Only those services expressly authorized by subdivision (b)(3)(i)(A) of this clause are permitted under this clause.

(ii) Professional and technical services.

(A) The prohibition on the use of appropriated funds, in subparagraph (b)(1) of this clause, does not apply in the case of--

(1) A payment of reasonable compensation made to an officer or employee of a person requesting or receiving a covered Federal action or an extension, continuation, renewal, amendment, or modification of a covered Federal action, if payment is for professional or technical services rendered directly in the preparation, submission, or

negotiation of any bid, proposal, or application for that Federal action or for meeting requirements imposed by or pursuant to law as a condition for receiving that Federal action.

(2) Any reasonable payment to a person, other than an officer or employee of a person requesting or receiving a covered Federal action or an extension, continuation, renewal, amendment, or modification of a covered Federal action if the payment is for professional or technical services rendered directly in the preparation, submission, or negotiation of any bid, proposal, or application for that Federal action or for meeting requirements imposed by or pursuant to law as a condition for receiving that Federal action. Persons other than officers or employees of a person requesting or receiving a covered Federal action include consultants and trade associations.

(B) For purposes of subdivision (b)(3)(ii)(A) of this clause, "professional and technical services" shall be limited to advice and analysis directly applying any professional or technical discipline. For example, drafting of a legal document accompanying a bid or proposal by a lawyer is allowable. Similarly, technical advice provided by an engineer on the performance or operational capability of a piece of equipment rendered directly in the negotiation of a contract is allowable. However, communications with the intent to influence made by a professional (such as a licensed lawyer) or a technical person (such as a licensed accountant) are not allowable under this section unless they provide advice and analysis directly applying their professional or technical expertise and unless the advice or analysis is rendered directly and solely in the preparation, submission or negotiation of a covered Federal action. Thus, for example, communications with the intent to influence made by a lawyer that do not provide legal advice or analysis directly and solely related to the legal aspects of his or her client's proposal, but generally advocate one proposal over another are not allowable under this section because the lawyer is not providing professional legal services. Similarly, communications with the intent to influence made by an engineer providing an engineering analysis prior to the preparation or submission of a bid or proposal are not allowable under this section since the engineer is providing technical services but not directly in the preparation, submission or negotiation of a covered Federal action.

(C) Requirements imposed by or pursuant to law as a condition for receiving a covered Federal award include those required by law or regulation and any other requirements in the actual award documents.

(D) Only those services expressly authorized by subdivisions (b)(3)(ii)(A)(1) and (2) of this clause are permitted under this clause.

(E) The reporting requirements of FAR 3.803(a) shall not apply with respect to payments of reasonable compensation made to regularly employed officers or employees of a person.

(c) Disclosure.

(1) The Contractor who requests or receives from an agency a Federal contract shall file with that agency a disclosure form, OMB standard form LLL, Disclosure of Lobbying Activities, if such person has made or has agreed to make any payment using nonappropriated funds (to include profits from any covered Federal action), which would be prohibited under subparagraph (b)(1) of this clause, if paid for with appropriated funds.

(2) The Contractor shall file a disclosure form at the end of each calendar quarter in which there occurs any event that materially affects the accuracy of the information contained in any disclosure form previously filed by such person under subparagraph (c)(1) of this clause. An event that materially affects the accuracy of the information reported includes--

(i) A cumulative increase of $25,000 or more in the amount paid or expected to be paid for influencing or attempting to influence a covered Federal action; or

(ii) A change in the person(s) or individual(s) influencing or attempting to influence a covered Federal action; or

(iii) A change in the officer(s), employee(s), or Member(s) contacted to influence or attempt to influence a covered Federal action.

(3) The Contractor shall require the submittal of a certification, and if required, a disclosure form by any person who requests or receives any subcontract exceeding $100,000 under the Federal contract.

(4) All subcontractor disclosure forms (but not certifications) shall be forwarded from tier to tier until received by the prime Contractor. The prime Contractor shall submit all disclosures to the Contracting Officer at the end of the calendar quarter in which the disclosure form is submitted by the subcontractor. Each subcontractor certification shall be retained in the subcontract file of the awarding Contractor.

(d) Agreement. The Contractor agrees not to make any payment prohibited by this clause.

(e) Penalties.

(1) Any person who makes an expenditure prohibited under paragraph (a) of this clause or who fails to file or amend the disclosure form to be filed or amended by paragraph (b) of this clause shall be subject to civil penalties as provided for by 31 U.S.C. 1352. An imposition of a civil penalty does not prevent the Government from seeking any other remedy that may be applicable.

(2) Contractors may rely without liability on the representation made by their subcontractors in the certification and disclosure form.

(f) Cost allowability. Nothing in this clause makes allowable or reasonable any costs which would otherwise be unallowable or unreasonable. Conversely, costs made specifically unallowable by the requirements in this clause will not be made allowable under any other provision.

(End of clause)

52.204-4 PRINTED OR COPIED DOUBLE-SIDED ON RECYCLED PAPER (AUG 2000)

(a) Definitions. As used in this clause--

“Postconsumer material” means a material or finished product that has served its intended use and has been discarded for disposal or recovery, having completed its life as a consumer item. Postconsumer material is a part of the broader category of “recovered material.” For paper and paper products, postconsumer material means “postconsumer fiber” defined by the U.S. Environmental Protection Agency (EPA) as--

(1) Paper, paperboard, and fibrous materials from retail stores, office buildings, homes, and so forth, after they have passed through their end-usage as a consumer item, including: used corrugated boxes; old newspapers; old magazines; mixed waste paper; tabulating cards; and used cordage; or

(2) All paper, paperboard, and fibrous materials that enter and are collected from municipal solid waste; but not

(3) Fiber derived from printers' over-runs, converters' scrap, and over-issue publications.

“Printed or copied double-sided” means printing or reproducing a document so that information is on both sides of a sheet of paper.

“Recovered material,” for paper and paper products, is defined by EPA in its Comprehensive Procurement Guideline as “recovered fiber” and means the following materials:

(1) Postconsumer fiber; and

(2) Manufacturing wastes such as--

(i) Dry paper and paperboard waste generated after completion of the papermaking process (that is, those manufacturing operations up to and including the cutting and trimming of the paper machine reel into smaller rolls or rough sheets) including: envelope cuttings, bindery trimmings, and other paper and paperboard waste resulting from printing, cutting, forming, and other converting operations; bag, box, and carton manufacturing wastes; and butt rolls, mill wrappers, and rejected unused stock; and

(ii) Repulped finished paper and paperboard from obsolete inventories of paper and paperboard manufacturers, merchants, wholesalers, dealers, printers, converters, or others.

(b) In accordance with Section 101 of Executive Order 13101 of September 14, 1998, Greening the Government through Waste Prevention, Recycling, and Federal Acquisition, the Contractor is encouraged to submit paper documents, such as offers, letters, or reports, that are printed or copied double-sided on recycled paper that meet minimum content standards specified in Section 505 of Executive Order 13101, when not using electronic commerce methods to submit information or data to the Government.

(c) If the Contractor cannot purchase high-speed copier paper, offset paper, forms bond, computer printout paper, carbonless paper, file folders, white wove envelopes, writing and office paper, book paper, cotton fiber paper, and cover stock meeting the 30 percent postconsumer material standard for use in submitting paper documents to the Government, it should use paper containing no less than 20 percent postconsumer material. This lesser standard should be used only when paper meeting the 30 percent postconsumer material standard is not obtainable at a reasonable price or does not meet reasonable performance standards.

(End of clause)

52.209-6 PROTECTING THE GOVERNMENT'S INTEREST WHEN SUBCONTRACTING WITH CONTRACTORS DEBARRED, SUSPENDED, OR PROPOSED FOR DEBARMENT (JUL 1995)

(a) The Government suspends or debars Contractors to protect the Government's interests. The Contractor shall not enter into any subcontract in excess of the $25,000 with a Contractor that is debarred, suspended, or proposed for debarment unless there is a compelling reason to do so.

(b) The Contractor shall require each proposed first-tier subcontractor, whose subcontract will exceed $25,000, to disclose to the Contractor, in writing, whether as of the time of award of the subcontract, the subcontractor, or its principles, is or is not debarred, suspended, or proposed for debarment by the Federal Government.

(c) A corporate officer or a designee of the Contractor shall notify the Contracting Officer, in writing, before entering into a subcontract with a party that is debarred, suspended, or proposed for debarment (see FAR 9.404 for information on the List of Parties Excluded from Federal Procurement and Nonprocurement Programs). The notice must include the following:

(1) The name of the subcontractor.

(2) The Contractor's knowledge of the reasons for the subcontractor being on the List of Parties Excluded from Federal Procurement and Nonprocurement Programs.

(3) The compelling reason(s) for doing business with the subcontractor notwithstanding its inclusion on the List of Parties Excluded from Federal Procurement and Nonprocurement Programs.

(4) The systems and procedures the Contractor has established to ensure that it is fully protecting the Government's interests when dealing with such subcontractor in view of the specific basis for the party's debarment, suspension, or proposed debarment.

(End of clause)

52.211-5 MATERIAL REQUIREMENTS (AUG 2000)

(a) Definitions.

As used in this clause--

New means composed of previously unused components, whether manufactured from virgin material, recovered material in the form of raw material, or materials and by-products generated from, and reused within, an original manufacturing process; provided that the supplies meet contract requirements, including but not limited to, performance, reliability, and life expectancy.

Reconditioned means restored to the original normal operating condition by readjustments and material replacement.

Recovered material means waste materials and by-products recovered or diverted from solid waste, but the term does not include those materials and by-products generated from, and commonly reused within, an original manufacturing process.

Remanufactured means factory rebuilt to original specifications.

Virgin material means--

(1) Previously unused raw material, including previously unused copper, aluminum, lead, zinc, iron, other metal or metal ore; or

(2) Any undeveloped resource that is, or with new technology will become, a source of raw materials.

(b) Unless this contract otherwise requires virgin material or supplies composed of or manufactured from virgin material, the Contractor shall provide supplies that are new, reconditioned, or remanufactured, as defined in this clause.

(c) A proposal to provide unused former Government surplus property shall include a complete description of the material, the quantity, the name of the Government agency from which acquired, and the date of acquisition.

(d) A proposal to provide used, reconditioned, or remanufactured supplies shall include a detailed description of such supplies and shall be submitted to the Contracting Officer for approval.

(e) Used, reconditioned, or remanufactured supplies, or unused former Government surplus property, may be used in contract performance if the Contractor has proposed the use of such supplies, and the Contracting Officer has authorized their use.

(End of clause)

52.214-26 AUDIT AND RECORDS--SEALED BIDDING. (OCT 1997)

(a) As used in this clause, records includes books, documents, accounting procedures and practices, and other data, regardless of type and regardless of whether such items are in written form, in the form of computer data, or in any other form.

(b) Cost or pricing data. If the Contractor has been required to submit cost or pricing data in connection with the pricing of any modification to this contract, the Contracting Officer, or an authorized representative of the Contracting Officer, in order to evaluate the accuracy, completeness, and currency of the cost or pricing data, shall

have the right to examine and audit all of the Contractor's records, including computations and projections, related to--

(1) The proposal for the modification;

(2) The discussions conducted on the proposal(s), including those related to negotiating;

(3) Pricing of the modification; or

(4) Performance of the modification.

(c) Comptroller General. In the case of pricing any modification, the Comptroller General of the United States, or an authorized representative, shall have the same rights as specified in paragraph (b) of this clause.

(d) Availability. The Contractor shall make available at its office at all reasonable times the materials described in reproduction, until 3 years after final payment under this contract, or for any other period specified in Subpart 4.7 of the Federal Acquisition Regulation (FAR). FAR Subpart 4.7, Contractor Records Retention, in effect on the data of this contract, is incorporated by reference in its entirety and made a part of this contract.

(1) If this contract is completely or partially terminated, the records relating to the work terminated shall be made available for 3 years after any resulting final termination settlement.

(2) Records pertaining to appeals under the Disputes clause or to litigation or the settlement of claims arising under or relating to the performance of this contract shall be made available until disposition of such appeals, litigation, or claims.

(e) The Contractor shall insert a clause containing all the provisions of this clause, including this paragraph (e), in all subcontracts expected to exceed the threshold in FAR 15.403-4(a)(1) for submission of cost or pricing data.

(End of clause)

52.214-27 PRICE REDUCTION FOR DEFECTIVE COST OR PRICING DATA - MODIFICATIONS - SEALED BIDDING. (OCT 1997)

(a) This clause shall become operative only for any modification to this contract involving aggregate increases and/or decreases in costs, plus applicable profits, expected to exceed the threshold for the submission of cost or pricing data at FAR 15.403-4(a)(1), except that this clause does not apply to a modification if an exception under FAR 15.403-1(b) applies.

(1) Based on adequate price competition;

(2) Based on established catalog or market prices of commercial items sold in substantial quantities to the general public; or

(3) Set by law or regulation.

(b) If any price, including profit, negotiated in connection with any modification under this clause, was increased by any significant amount because

(1) the Contractor or a subcontractor furnished cost or pricing data that were not complete, accurate, and current as certified in its Certificate of Current Cost or Pricing Data;

(2) a subcontractor or prospective subcontractor furnished the Contractor cost or pricing data that were not complete, accurate, and current as certified in the Contractor's Certificate of Current Cost or Pricing Data; or

(3) any of these parties furnished data of any description that were not accurate, the price shall be reduced accordingly and the contract shall be modified to reflect the reduction. This right to a price reduction is limited to that resulting from defects in data relating to modifications for which this clause becomes operative under paragraph (a) above.

(c) Any reduction in the contract price under paragraph (b) above due to defective data from a prospective subcontractor that was not subsequently awarded the subcontract shall be limited to the amount, plus applicable overhead and profit markup, by which:

(1) the actual subcontract; or

(2) the actual cost to the Contractor, if there was no subcontract, was less than the prospective subcontract cost estimate submitted by the Contractor; provided, that the actual subcontract price was not itself affected by defective cost or pricing data.

(d) If the Contracting Officer determines under paragraph (b) of this clause that a price or cost reduction should be made:

(1) the Contractor agrees not to raise the following matters as a defense:

(i) The Contractor or subcontractor was a sole source supplier or otherwise was in a superior bargaining position and thus the price of the contract would not have been modified even if accurate, complete, and current cost or pricing data had been submitted;

(ii) The Contracting Officer should have known that the cost or pricing data in issue were defective even though the Contractor or subcontractor took no affirmative action to bring the character of the data to the attention of the Contracting Officer;

(iii) The contract was based on an agreement about the total cost of the contract and there was no agreement about the cost of each item procured under the contract; or

(iv) The Contractor or subcontractor did not submit a Certificate of Current Cost or Pricing Data.

(2) Except as prohibited by subdivision (d)(2)(ii) of this clause:

(i) an offset in an amount determined appropriate by the Contracting Officer based upon the facts shall be allowed against the amount of a contract price reduction if:

(A) The Contractor certifies to the Contracting Officer that, to the best of the Contractor's knowledge and belief, the Contractor is entitled to the offset in the amount requested; and

(B) The Contractor proves that the cost or pricing data were available before the date of agreement on the price of the contract (or price of the modification) and that the data were not submitted before such date.

(ii) An offset shall not be allowed if:

(A) The understated data was known by the Contractor to be understated when the Certificate of Current Cost or Pricing Data was signed; or (B) The Government proves that the facts demonstrate that the contract price would not have increased in the amount to be offset even if the available data had been submitted before the date of agreement on price.

(e) If any reduction in the contract price under this clause reduces the price of items for which payment was made prior to the date of the modification reflecting the price reduction, the Contractor shall be liable to and shall pay the United States at the time such overpayment is repaid:

(1) Simple interest on the amount of such overpayment to be computed from the date(s) of overpayment to the Contractor to the date the Government is repaid by the Contractor at the applicable underpayment rate effective for each quarter prescribed by the Secretary of the Treasury under 26 U.S.C. 6621(a)(2); and

(2) A penalty equal to the amount of the overpayment, if the Contractor or subcontractor knowingly submitted cost or pricing data which were incomplete, inaccurate, or noncurrent.

(End of clause)

52.214-28 SUBCONTRACTOR COST OR PRICING DATA - MODIFICATIONS - SEALED BIDDING. (OCT 1997)

(a) The requirements of paragraphs (b) and (c) of this clause shall:

(1) become operative only for any modification to this contract involving aggregate increases and/or decreases in costs, plus applicable profits, expected to exceed the threshold for submission of cost or pricing data at (FAR) 48 CFR 15.403-4(a)(1); and

(2) be limited to such modifications.

(b) Before awarding any subcontract expected to exceed the threshold for submission of cost or pricing data at FAR 15.403-4(a)(1), on the date of agreement on price or the date of award, whichever is later; or before pricing any subcontract modifications involving aggregate increases and/or decreases in costs, plus applicable profits, expected to exceed the threshold for submission of cost or pricing data at FAR 15.403-4(a)(1), the Contractor shall require the subcontractor to submit cost or pricing data (actually or by specific identification in writing), unless an exception under FAR 15.403-1(b) applies.

(1) Based on adequate price competition;

(2) Based on established catalog or market prices of commercial items sold in substantial quantities to the general public; or

(3) Set by law or regulation.

(c) The Contractor shall require the subcontractor to certify in substantially the form prescribed in subsection 15.406-2 of the Federal Acquisition Regulation that, to the best of its knowledge and belief, the data submitted under paragraph (b) above were accurate, complete, and current as of the date of agreement on the negotiated price of the subcontract or subcontract modification.

(d) The Contractor shall insert the substance of this clause, including this paragraph (d), in each subcontract that, when entered into, exceeds the threshold for submission of cost or pricing data at FAR 15.403-4(a)(1).

(End of clause)

52.214-29 ORDER OF PRECEDENCE--SEALED BIDDING (JAN 1986)

Any inconsistency in this solicitation or contract shall be resolved by giving precedence in the following order: (a) the Schedule (excluding the specifications); (b) representations and other instructions; (c) contract clauses; (d) other documents, exhibits, and attachments; and (e) the specifications.

(End of clause)

52.217-7 OPTION FOR INCREASED QUANTITY--SEPARATELY PRICED LINE ITEM (MAR 1989)

The Government may require the delivery of the numbered line item, identified in the Schedule as an option item, in the quantity and at the price stated in the Schedule. The Contracting Officer may exercise the option by written notice to the Contractor within 30 days after award of the contract. Delivery of added items shall continue at the same rate that like items are called for under the contract, unless the parties otherwise agree.

(End of clause)

52.219-8 UTILIZATION OF SMALL BUSINESS CONCERNS (OCT 2000)

(a) It is the policy of the United States that small business concerns, veteran-owned small business concerns, service-disabled veteran-owned small business concerns, HUBZone small business concerns, small disadvantaged business concerns, and women-owned small business concerns shall have the maximum practicable opportunity to participate in performing contracts let by any Federal agency, including contracts and subcontracts for subsystems, assemblies, components, and related services for major systems. It is further the policy of the United States that its prime contractors establish procedures to ensure the timely payment of amounts due pursuant to the terms of their subcontracts with small business concerns, veteran-owned small business concerns, service-disabled veteran-owned small business concerns, HUBZone small business concerns, small disadvantaged business concerns, and women-owned small business concerns.

(b) The Contractor hereby agrees to carry out this policy in the awarding of subcontracts to the fullest extent consistent with efficient contract performance. The Contractor further agrees to cooperate in any studies or surveys as may be conducted by the United States Small Business Administration or the awarding agency of the United States as may be necessary to determine the extent of the Contractor's compliance with this clause.

Definitions. As used in this contract--

HUBZone small business concern means a small business concern that appears on the List of Qualified HUBZone Small Business Concerns maintained by the Small Business Administration.

Service-disabled veteran-owned small business concern--

(1) Means a small business concern--

(i) Not less than 51 percent of which is owned by one or more service-disabled veterans or, in the case of any publicly owned business, not less than 51 percent of the stock of which is owned by one or more service-disabled veterans; and

(ii) The management and daily business operations of which are controlled by one or more service-disabled veterans or, in the case of a veteran with permanent and severe disability, the spouse or permanent caregiver of such veteran.

(2) Service-disabled veteran means a veteran, as defined in 38 U.S.C. 101(2), with a disability that is service-connected, as defined in 38 U.S.C. 101(16).

Small business concern means a small business as defined pursuant to Section 3 of the Small Business Act and relevant regulations promulgated pursuant thereto.

Small disadvantaged business concern means a small business concern that represents, as part of its offer that--

(1) It has received certification as a small disadvantaged business concern consistent with 13 CFR part 124, subpart B;

(2) No material change in disadvantaged ownership and control has occurred since its certification;

(3) Where the concern is owned by one or more individuals, the net worth of each individual upon whom the certification is based does not exceed $750,000 after taking into account the applicable exclusions set forth at 13 CFR 124.104(c)(2); and

(4) It is identified, on the date of its representation, as a certified small disadvantaged business in the database maintained by the Small Business Administration (PRO-Net).

Veteran-owned small business concern means a small business concern--

(1) Not less than 51 percent of which is owned by one or more veterans (as defined at 38 U.S.C. 101(2)) or, in the case of any publicly owned business, not less than 51 percent of the stock of which is owned by one or more veterans; and

(2) The management and daily business operations of which are controlled by one or more veterans.

Women-owned small business concern means a small business concern--

(1) That is at least 51 percent owned by one or more women, or, in the case of any publicly owned business, at least 51 percent of the stock of which is owned by one or more women; and

(2) Whose management and daily business operations are controlled by one or more women.

(d) Contractors acting in good faith may rely on written representations by their subcontractors regarding their status as a small business concern, a veteran-owned small business concern, a service-disabled veteran-owned small business concern, a HUBZone small business concern, a small disadvantaged business concern, or a women-owned small business concern.

(End of clause)

52.219-9 SMALL BUSINESS SUBCONTRACTING PLAN (JAN 2002)--ALTERNATE I (OCT 2001).

(a) This clause does not apply to small business concerns.

(b) Definitions. As used in this clause--

Commercial item means a product or service that satisfies the definition of commercial item in section 2.101 of the Federal Acquisition Regulation.

Commercial plan means a subcontracting plan (including goals) that covers the offeror's fiscal year and that applies to the entire production of commercial items sold by either the entire company or a portion thereof (e.g., division, plant, or product line).

Individual contract plan means a subcontracting plan that covers the entire contract period (including option periods), applies to a specific contract, and has goals that are based on the offeror's planned subcontracting in support of the specific contract, except that indirect costs incurred for common or joint purposes may be allocated on a prorated basis to the contract.

Master plan means a subcontracting plan that contains all the required elements of an individual contract plan, except goals, and may be incorporated into individual contract plans, provided the master plan has been approved.

Subcontract means any agreement (other than one involving an employer-employee relationship) entered into by a Federal Government prime Contractor or subcontractor calling for supplies or services required for performance of the contract or subcontract.

(c) The apparent low bidder, upon request by the Contracting Officer, shall submit a subcontracting plan, where applicable, that separately addresses subcontracting with small business, veteran-owner small business, HUBZone small business, small disadvantaged business, and women-owned small business concerns. If the bidder is submitting an individual contract plan, the plan must separately address subcontracting with small business, HUBZone small business, small disadvantaged business, and women-owned small business concerns, with a separate part for the basic contract and separate parts for each option (if any). The plan shall be included in and made a part of the resultant contract. The subcontracting plan shall be submitted within the time specified by the Contracting Officer. Failure to submit the subcontracting plan shall make the bidder ineligible for the award of a contract.

(d) The offeror's subcontracting plan shall include the following:

(1) Goals, expressed in terms of percentages of total planned subcontracting dollars, for the use of small business, veteran-owned small business, HUBZone small business, small disadvantaged business, and women-owned small business concerns as subcontractors. The offeror shall include all subcontracts that contribute to contract performance, and may include a proportionate share of products and services that are normally allocated as indirect costs.

(2) A statement of--

(i) Total dollars planned to be subcontracted for an individual contract plan; or the offeror's total projected sales, expressed in dollars, and the total value of projected subcontracts to support the sales for a commercial plan;

(ii) Total dollars planned to be subcontracted to small business concerns;

(iii) Total dollars planned to be subcontracted to veteran-owned small business concerns;

(iv) Total dollars planned to be subcontracted to HUBZone small business concerns;

(v) Total dollars planned to be subcontracted to small disadvantaged business concerns; and

(vi) Total dollars planned to be subcontracted to women-owned small business concerns.

(3) A description of the principal types of supplies and services to be subcontracted, and an identification of the types planned for subcontracting to--

(i) Small business concerns;

(ii) Veteran-owned small business concerns;

(iii) HUBZone small business concerns;

(iv) Small disadvantaged business concerns; and

(v) Women-owned small business concerns.

(4) A description of the method used to develop the subcontracting goals in paragraph (d)(1) of this clause.

(5) A description of the method used to identify potential sources for solicitation purposes (e.g., existing company source lists, the Procurement Marketing and Access Network (PRO-Net) of the Small Business Administration (SBA), veterans service organizations, the National Minority Purchasing Council Vendor Information Service, the Research and Information Division of the Minority Business Development Agency in the Department of Commerce, or small, HUBZone, small disadvantaged, and women-owned small business trade associations). A firm may rely on the information contained in PRO-Net as an accurate representation of a concern's size and ownership characteristics for the purposes of maintaining a small, veteran-owned small, HUBZone small, small disadvantaged, and women-

owned small business source list. Use of PRO-Net as its source list does not relieve a firm of its responsibilities (e.g., outreach, assistance, counseling, or publicizing subcontracting opportunities) in this clause.

(6) A statement as to whether or not the offeror in included indirect costs in establishing subcontracting goals, and a description of the method used to determine the proportionate share of indirect costs to be incurred with—

(i) Small business concerns;

(ii) Veteran-owned small business concerns;

(iii) HUBZone small business concerns;

(iv) Small disadvantaged business concerns; and

(v) Women-owned small business concerns.

(7) The name of the individual employed by the offeror who will administer the offeror's subcontracting program, and a description of the duties of the individual.

(8) A description of the efforts the offeror will make to assure that small business, veteran-owned small business, HUBZone small business, small disadvantaged business and women-owned small business concerns have an equitable opportunity to compete for subcontracts.

(9) Assurances that the offeror will include the clause of this contract entitled ``Utilization of Small Business Concerns'' in all subcontracts that offer further subcontracting opportunities, and that the offeror will require all subcontractors (except small business concerns) that receive subcontracts in excess of $500,000 ($1,000,000 for construction of any public facility) to adopt a subcontracting plan that complies with the requirements of this clause.

(10) Assurances that the offeror will--

(i) Cooperate in any studies or surveys as may be required;

(ii) Submit periodic reports so that the Government can determine the extent of compliance by the offeror with the subcontracting plan;

(iii) Submit Standard Form (SF) 294, Subcontracting Report for Individual Contracts, and/or SF 295, Summary Subcontract Report, in accordance with paragraph (j) of this clause. The reports shall provide information on subcontract awards to small business concerns, veteran-owned small business concerns, service-disabled veteran-owned small business concerns, small disadvantaged business concerns, women-owned small business concerns, and Historically Black Colleges and Universities and Minority Institutions. Reporting shall be in accordance with the instructions on the forms or as provided in agency regulations.

(iv) Ensure that its subcontractors agree to submit SF 294 and SF 295.

(11) A description of the types of records that will be maintained concerning procedures that have been adopted to comply with the requirements and goals in the plan, including establishing source lists; and a description of the offeror's efforts to locate small business, veteran-owned small business, HUBZone small business, small disadvantaged business, and women-owned small business concerns and award subcontracts to them. The records shall include at least the following (on a plant-wide or company-wide basis, unless otherwise indicated)

(i) Source lists (e.g., PRO-Net), guides, and other data that identify small business, veteran-owner small business, HUBZone small business, small disadvantaged business, and women-owned small business concerns.

(ii) Organizations contacted in an attempt to locate sources that are small business, veteran-owned small business, HUBZone small business, small disadvantaged business, or women-owned small business concerns.

(iii) Records on each subcontract solicitation resulting in an award of more than $100,000, indicating--

(A) Whether small business concerns were solicited and, if not, why not;

(B) Whether veteran-owned small business concerns were solicited and, if not, why not;

(C) Whether HUBZone small business concerns were solicited and, if not, why not;

(D) Whether small disadvantaged business concerns were solicited and, if not, why not;

(E) Whether women-owned small business concerns were solicited and, if not, why not; and

(F) If applicable, the reason award was not made to a small business concern.

(iv) Records of any outreach efforts to contact--

(A) Trade associations;

(B) Business development organizations;

(C) Conferences and trade fairs to locate small, HUBZone small, small disadvantaged, and women-owned small business sources; and

(D) Veterans service organizations.

(v) Records of internal guidance and encouragement provided to buyers through--

(A) Workshops, seminars, training, etc.; and

(B) Monitoring performance to evaluate compliance with the program's requirements.

(vi) On a contract-by-contract basis, records to support award data submitted by the offeror to the Government, including the name, address, and business size of each subcontractor. Contractors having commercial plans need not comply with this requirement.

(e) In order to effectively implement this plan to the extent consistent with efficient contract performance, the Contractor shall perform the following functions:

(1) Assist small business, veteran-owner small business, HUBZone small business, small disadvantaged business, and women-owned small business concerns by arranging solicitations, time for the preparation of bids, quantities, specifications, and delivery schedules so as to facilitate the participation by such concerns. Where the Contractor's lists of potential small business, veteran-owner small business, HUBZone small business, small disadvantaged business, and women-owned small business subcontractors are excessively long, reasonable effort shall be made to give all such small business concerns an opportunity to compete over a period of time.

(2) Provide adequate and timely consideration of the potentialities of small business, veteran-owner small business, HUBZone small business, small disadvantaged business, and women-owned small business concerns in all ``make-or-buy'' decisions.

(3) Counsel and discuss subcontracting opportunities with representatives of small business, veteran-owner small business, HUBZone small business, small disadvantaged business, and women-owned small business firms.

(4) Provide notice to subcontractors concerning penalties and remedies for misrepresentations of business status as small, veteran-owner small business, HUBZone small, small disadvantaged, or women-owned small business for the purpose of obtaining a subcontract that is to be included as part or all of a goal contained in the Contractor's subcontracting plan.

(f) A master plan on a plant or division-wide basis that contains all the elements required by paragraph (d) of this clause, except goals, may be incorporated by reference as a part of the subcontracting plan required of the offeror by this clause; provided--
(1) the master plan has been approved, (2) the offeror ensures that the master plan is updated as necessary and provides copies of the approved master plan, including evidence of its approval, to the Contracting Officer, and (3) goals and any deviations from the master plan deemed necessary by the Contracting Officer to satisfy the requirements of this contract are set forth in the individual subcontracting plan.

(g) A commercial plan is the preferred type of subcontracting plan for contractors furnishing commercial items. The commercial plan shall relate to the offeror's planned subcontracting generally, for both commercial and Government business, rather than solely to the Government contract. Commercial plans are also preferred for subcontractors that provide commercial items under a prime contract, whether or not the prime contractor is supplying a commercial item.

(h) Prior compliance of the offeror with other such subcontracting plans under previous contracts will be considered by the Contracting Officer in determining the responsibility of the offeror for award of the contract.

(i) The failure of the Contractor or subcontractor to comply in good faith with (1) the clause of this contract entitled "Utilization Of Small Business Concerns," or (2) an approved plan required by this clause, shall be a material breach of the contract.

(j) The Contractor shall submit the following reports:

(1) Standard Form 294, Subcontracting Report for Individual Contracts. This report shall be submitted to the Contracting Officer semiannually and at contract completion. The report covers subcontract award data related to this contract. This report is not required for commercial plans.

(2) Standard Form 295, Summary Subcontract Report. This report encompasses all of the contracts with the awarding agency. It must be submitted semi-annually for contracts with the Department of Defense and annually for contracts with civilian agencies. If the reporting activity is covered by a commercial plan, the reporting activity must report annually all subcontract awards under that plan. All reports submitted at the close of each fiscal year (both individual and commercial plans) shall include a breakout, in the Contractor's format, of subcontract awards, in whole dollars, to small disadvantaged business concerns by North American Industry Classification System (NAICS) Industry Subsector. For a commercial plan, the Contractor may obtain from each of its subcontractors a predominant NAICS Industry Subsector and report all awards to that subcontractor under its predominant NAICS Industry Subsector.

(End of clause)

52.219-16 LIQUIDATED DAMAGES-SUBCONTRACTING PLAN (JAN 1999)

(a) Failure to make a good faith effort to comply with the subcontracting plan, as used in this clause, means a willful or intentional failure to perform in accordance with the requirements of the subcontracting plan approved under the clause in this contract entitled "Small Business Subcontracting Plan," or willful or intentional action to frustrate the plan.

(b) Performance shall be measured by applying the percentage goals to the total actual subcontracting dollars or, if a commercial plan is involved, to the pro rata share of actual subcontracting dollars attributable to Government contracts covered by the commercial plan. If, at contract completion or, in the case of a commercial plan, at the close of the fiscal year for which the plan is applicable, the Contractor has failed to meet its subcontracting goals and the Contracting Officer decides in accordance with paragraph (c) of this clause that the Contractor failed to make a good faith effort to comply with its subcontracting plan, established in accordance with the clause in this contract entitled “Small Business Subcontracting Plan,” the Contractor shall pay the Government liquidated damages in an

amount stated. The amount of probable damages attributable to the Contractor's failure to comply shall be an amount equal to the actual dollar amount by which the Contractor failed to achieve each subcontract goal.

(c) Before the Contracting Officer makes a final decision that the Contractor has failed to make such good faith effort, the Contracting Officer shall give the Contractor written notice specifying the failure and permitting the Contractor to demonstrate what good faith efforts have been made and to discuss the matter. Failure to respond to the notice may be taken as an admission that no valid explanation exists. If, after consideration of all the pertinent data, the Contracting Officer finds that the Contractor failed to make a good faith effort to comply with the subcontracting plan, the Contracting Officer shall issue a final decision to that effect and require that the Contractor pay the Government liquidated damages as provided in paragraph (b) of this clause.

(d) With respect to commercial plans, the Contracting Officer who approved the plan will perform the functions of the Contracting Officer under this clause on behalf of all agencies with contracts covered by the commercial plan.

(e) The Contractor shall have the right of appeal, under the clause in this contract entitled Disputes, from any final decision of the Contracting Officer.

(f) Liquidated damages shall be in addition to any other remedies that the Government may have.

(End of clause)

52.222-1 NOTICE TO THE GOVERNMENT OF LABOR DISPUTES (FEB 1997)

If the Contractor has knowledge that any actual or potential labor dispute is delaying or threatens to delay the timely performance of this contract, the Contractor shall immediately give notice, including all relevant information, to the Contracting Officer.

(End of clause)

52.222-20 WALSH-HEALEY PUBLIC CONTRACTS ACT (DEC 1996)

If this contract is for the manufacture or furnishing of materials, supplies, articles or equipment in an amount that exceeds or may exceed $10,000, and is subject to the Walsh-Healey Public Contracts Act, as amended (41 U.S.C. 35-45), the following terms and conditions apply:

(a) All stipulations required by the Act and regulations issued by the Secretary of Labor (41 CFR Chapter 50) are incorporated by reference. These stipulations are subject to all applicable rulings and interpretations of the Secretary of Labor that are now, or may hereafter, be in effect.

(b) All employees whose work relates to this contract shall be paid not less than the minimum wage prescribed by regulations issued by the Secretary of Labor (41 CFR 50-202.2). Learners, student learners, apprentices, and handicapped workers may be employed at less than the prescribed minimum wage (see 41 CFR 50-202.3) to the same extent that such employment is permitted under Section 14 of the Fair Labor Standards Act (41 U.S.C. 40).

(End of clause)

52.222-26 EQUAL OPPORTUNITY (APR 2002)

(a) Definition. United States, as used in this clause, means the 50 States, the District of Columbia, Puerto Rico, the Northern Mariana Islands, American Samoa, Guam, the U.S. Virgin Islands, and Wake Island.

(b) If, during any 12-month period (including the 12 months preceding the award of this contract), the Contractor has been or is awarded nonexempt Federal contracts and/or subcontracts that have an aggregate value in excess of $10,000, the Contractor shall comply with paragraphs (b)(1) through (b)(11) of this clause, except for work performed outside the United States by employees who were not recruited within the United States. Upon request, the Contractor shall provide information necessary to determine the applicability of this clause.

(1) The Contractor shall not discriminate against any employee or applicant for employment because of race, color, religion, sex, or national origin. However, it shall not be a violation of this clause for the Contractor to extend a publicly announced preference in employment to Indians living on or near an Indian reservation, in connection with employment opportunities on or near an Indian reservation, as permitted by 41 CFR 60-1.5.

(2) The Contractor shall take affirmative action to ensure that applicants are employed, and that employees are treated during employment, without regard to their race, color, religion, sex, or national origin. This shall include, but not be limited to, (i) employment, (ii) upgrading, (iii) demotion, (iv) transfer, (v) recruitment or recruitment advertising, (vi) layoff or termination, (vii) rates of pay or other forms of compensation, and (viii) selection for training, including apprenticeship.

(3) The Contractor shall post in conspicuous places available to employees and applicants for employment the notices to be provided by the Contracting Officer that explain this clause.

(4) The Contractor shall, in all solicitations or advertisements for employees placed by or on behalf of the Contractor, state that all qualified applicants will receive consideration for employment without regard to race, color, religion, sex, or national origin.

(5) The Contractor shall send, to each labor union or representative of workers with which it has a collective bargaining agreement or other contract or understanding, the notice to be provided by the Contracting Officer advising the labor union or workers' representative of the Contractor's commitments under this clause, and post copies of the notice in conspicuous places available to employees and applicants for employment.

(6) The Contractor shall comply with Executive Order 11246, as amended, and the rules, regulations, and orders of the Secretary of Labor.

(7) The Contractor shall furnish to the contracting agency all information required by Executive Order 11246, as amended, and by the rules, regulations, and orders of the Secretary of Labor. The Contractor shall also file Standard Form 100 (EEO-1), or any successor form, as prescribed in 41 CFR part 60-1. Unless the Contractor has filed within the 12 months preceding the date of contract award, the Contractor shall, within 30 days after contract award, apply to either the regional Office of Federal Contract Compliance Programs (OFCCP) or the local office of the Equal Employment Opportunity Commission for the necessary forms.

(8) The Contractor shall permit access to its premises, during normal business hours, by the contracting agency or the OFCCP for the purpose of conducting on-site compliance evaluations and complaint investigations. The Contractor shall permit the Government to inspect and copy any books, accounts, records (including computerized records), and other material that may be relevant to the matter under investigation and pertinent to compliance with Executive Order 11246, as amended, and rules and regulations that implement the Executive Order.

(9) If the OFCCP determines that the Contractor is not in compliance with this clause or any rule, regulation, or order of the Secretary of Labor, this contract may be canceled, terminated, or suspended in whole or in part and the Contractor may be declared ineligible for further Government contracts, under the procedures authorized in Executive Order 11246, as amended. In addition, sanctions may be imposed and remedies invoked against the Contractor as provided in Executive Order 11246, as amended; in the rules, regulations, and orders of the Secretary of Labor; or as otherwise provided by law.

(10) The Contractor shall include the terms and conditions of subparagraphs (b)(1) through (11) of this clause in every subcontract or purchase order that is not exempted by the rules, regulations, or orders of the Secretary of Labor issued under Executive Order 11246, as amended, so that these terms and conditions will be binding upon each subcontractor or vendor.

(11) The Contractor shall take such action with respect to any subcontract or purchase order as the contracting officer may direct as a means of enforcing these terms and conditions, including sanctions for noncompliance; provided, that if the Contractor becomes involved in, or is threatened with, litigation with a subcontractor or vendor as a result of any direction, the Contractor may request the United States to enter into the litigation to protect the interests of the United States.

(c) Notwithstanding any other clause in this contract, disputes relative to this clause will be governed by the procedures in 41 CFR 60-1.1.

(End of clause)

52.222-35 EQUAL OPPORTUNITY FOR SPECIAL DISABLED VETERANS, VETERANS OF THE VIETNAM ERA, AND OTHER ELIGIBLE VETERANS (DEC 2001)

(a) Definitions. As used in this clause--

All employment openings means all positions except executive and top management, those positions that will be filled from within the Contractor's organization, and positions lasting 3 days or less. This term includes full-time employment, temporary employment of more than 3 days duration, and part-time employment.

Executive and top management means any employee--

(1) Whose primary duty consists of the management of the enterprise in which the individual is employed or of a customarily recognized department or subdivision thereof;

(2) Who customarily and regularly directs the work of two or more other employees;

(3) Who has the authority to hire or fire other employees or whose suggestions and recommendations as to the hiring or firing and as to the advancement and promotion or any other change of status of other employees will be given particular weight;

(4) Who customarily and regularly exercises discretionary powers; and

(5) Who does not devote more than 20 percent or, in the case of an employee of a retail or service establishment, who does not devote more than 40 percent of total hours of work in the work week to activities that are not directly and closely related to the performance of the work described in paragraphs (1) through (4) of this definition. This paragraph (5) does not apply in the case of an employee who is in sole charge of an establishment or a physically separated branch establishment, or who owns at least a 20 percent interest in the enterprise in which the individual is employed.

Other eligible veteran means any other veteran who served on active duty during a war or in a campaign or expedition for which a campaign badge has been authorized.

Positions that will be filled from within the Contractor's organization means employment openings for which the Contractor will give no consideration to persons outside the Contractor's organization (including any affiliates, subsidiaries, and parent companies) and includes any openings the Contractor proposes to fill from regularly established “recall” lists. The exception does not apply to a particular opening once an employer decides to consider applicants outside of its organization.

Qualified special disabled veteran means a special disabled veteran who satisfies the requisite skill, experience, education, and other job-related requirements of the employment position such veteran holds or desires, and who, with or without reasonable accommodation, can perform the essential functions of such position.

Special disabled veteran means--

(1) A veteran who is entitled to compensation (or who but for the receipt of military retired pay would be entitled to compensation) under laws administered by the Department of Veterans Affairs for a disability--

(i) Rated at 30 percent or more; or

(ii) Rated at 10 or 20 percent in the case of a veteran who has been determined under 38 U.S.C. 3106 to have a serious employment handicap (i.e., a significant impairment of the veteran's ability to prepare for, obtain, or retain employment consistent with the veteran's abilities, aptitudes, and interests); or

(2) A person who was discharged or released from active duty because of a service-connected disability.

Veteran of the Vietnam era means a person who--

(1) Served on active duty for a period of more than 180 days and was discharged or released from active duty with other than a dishonorable discharge, if any part of such active duty occurred--

(i) In the Republic of Vietnam between February 28, 1961, and May 7, 1975; or

(ii) Between August 5, 1964, and May 7, 1975, in all other cases; or

(2) Was discharged or released from active duty for a service-connected disability if any part of the active duty was performed--

(i) In the Republic of Vietnam between February 28, 1961, and May 7, 1975; or

(ii) Between August 5, 1964, and May 7, 1975, in all other cases.
(b) General. (1) The Contractor shall not discriminate against the individual because the individual is a special disabled veteran, a veteran of the Vietnam era, or other eligible veteran, regarding any position for which the employee or applicant for employment is qualified. The Contractor shall take affirmative action to employ, advance in employment, and otherwise treat qualified special disabled veterans, veterans of the Vietnam era, and other eligible veterans without discrimination based upon their disability or veterans' status in all employment practices such as--

(i) Recruitment, advertising, and job application procedures;

(ii) Hiring, upgrading, promotion, award of tenure, demotion, transfer, layoff, termination, right of return from layoff and rehiring;

(iii) Rate of pay or any other form of compensation and changes in compensation;

(iv) Job assignments, job classifications, organizational structures, position descriptions, lines of progression, and seniority lists;

(v) Leaves of absence, sick leave, or any other leave;

(vi) Fringe benefits available by virtue of employment, whether or not administered by the Contractor;

(vii) Selection and financial support for training, including apprenticeship, and on-the-job training under 38 U.S.C. 3687, professional meetings, conferences, and other related activities, and selection for leaves of absence to pursue training;

(viii) Activities sponsored by the Contractor including social or recreational programs; and

(ix) Any other term, condition, or privilege of employment.

(2) The Contractor shall comply with the rules, regulations, and relevant orders of the Secretary of Labor issued under the Vietnam Era Veterans' Readjustment Assistance Act of 1972 (the Act), as amended (38 U.S.C. 4211 and 4212).

(c) Listing openings. (1) The Contractor shall immediately list all employment openings that exist at the time of the execution of this contract and those which occur during the performance of this contract, including those not generated by this contract, and including those occurring at an establishment of the Contractor other than the one where the contract is being performed, but excluding those of independently operated corporate affiliates, at an appropriate local public employment service office of the State wherein the opening occurs. Listing employment openings with the U.S. Department of Labor's America's Job Bank shall satisfy the requirement to list jobs with the local employment service office.

(2) The Contractor shall make the listing of employment openings with the local employment service office at least concurrently with using any other recruitment source or effort and shall involve the normal obligations of placing a bona fide job order, including accepting referrals of veterans and nonveterans. This listing of employment openings does not require hiring any particular job applicant or hiring from any particular group of job applicants and is not intended to relieve the Contractor from any requirements of Executive orders or regulations concerning nondiscrimination in employment.

(3) Whenever the Contractor becomes contractually bound to the listing terms of this clause, it shall advise the State public employment agency in each State where it has establishments of the name and location of each hiring location in the State. As long as the Contractor is contractually bound to these terms and has so advised the State agency, it need not advise the State agency of subsequent contracts. The Contractor may advise the State agency when it is no longer bound by this contract clause.

(d) Applicability. This clause does not apply to the listing of employment openings that occur and are filled outside the 50 States, the District of Columbia, the Commonwealth of Puerto Rico, the Commonwealth of the Northern Mariana Islands, American Samoa, Guam, the Virgin Islands of the United States, and Wake Island.

(e) Postings. (1) The Contractor shall post employment notices in conspicuous places that are available to employees and applicants for employment.

(2) The employment notices shall--

(i) State the rights of applicants and employees as well as the Contractor's obligation under the law to take affirmative action to employ and advance in employment qualified employees and applicants who are special disabled veterans, veterans of the Vietnam era, and other eligible veterans; and

(ii) Be in a form prescribed by the Deputy Assistant Secretary for Federal Contract Compliance Programs, Department of Labor (Deputy Assistant Secretary of Labor), and provided by or through the Contracting Officer.

(3) The Contractor shall ensure that applicants or employees who are special disabled veterans are informed of the contents of the notice (e.g., the Contractor may have the notice read to a visually disabled veteran, or may lower the posted notice so that it can be read by a person in a wheelchair).

(4) The Contractor shall notify each labor union or representative of workers with which it has a collective bargaining agreement, or other contract understanding, that the Contractor is bound by the terms of the Act and is committed to take affirmative action to employ, and advance in employment, qualified special disabled veterans, veterans of the Vietnam era, and other eligible veterans.

(f) Noncompliance. If the Contractor does not comply with the requirements of this clause, the Government may take appropriate actions under the rules, regulations, and relevant orders of the Secretary of Labor issued pursuant to the Act.

(g) Subcontracts. The Contractor shall insert the terms of this clause in all subcontracts or purchase orders of $25,000 or more unless exempted by rules, regulations, or orders of the Secretary of Labor. The Contractor shall act as specified by the Deputy Assistant Secretary of Labor to enforce the terms, including action for noncompliance.

(End of clause)

52.222-36 AFFIRMATIVE ACTION FOR WORKERS WITH DISABILITIES (JUN 1998)

(a) General. (1) Regarding any position for which the employee or applicant for employment is qualified, the Contractor shall not discriminate against any employee or applicant because of physical or mental disability. The Contractor agrees to take affirmative action to employ, advance in employment, and otherwise treat qualified individuals with disabilities without discrimination based upon their physical or mental disability in all employment practices such as--

(i) Recruitment, advertising, and job application procedures;

(ii) Hiring, upgrading, promotion, award of tenure, demotion, transfer, layoff, termination, right of return from layoff, and rehiring;

(iii) Rates of pay or any other form of compensation and changes in compensation;

(iv) Job assignments, job classifications, organizational structures, position descriptions, lines of progression, and seniority lists;

(v) Leaves of absence, sick leave, or any other leave;

(vi) Fringe benefits available by virtue of employment, whether or not administered by the Contractor;

(vii) Selection and financial support for training, including apprenticeships, professional meetings, conferences, and other related activities, and selection for leaves of absence to pursue training;

(viii) Activities sponsored by the Contractor, including social or recreational programs; and

(ix) Any other term, condition, or privilege of employment.

(2) The Contractor agrees to comply with the rules, regulations, and relevant orders of the Secretary of Labor (Secretary) issued under the Rehabilitation Act of 1973 (29 U.S.C. 793) (the Act), as amended.

(b) Postings. (1) The Contractor agrees to post employment notices stating--

(i) The Contractor's obligation under the law to take affirmative action to employ and advance in employment qualified individuals with disabilities; and

(ii) The rights of applicants and employees.

(2) These notices shall be posted in conspicuous places that are available to employees and applicants for employment. The Contractor shall ensure that applicants and employees with disabilities are informed of the contents of the notice (e.g., the Contractor may have the notice read to a visually disabled individual, or may lower the posted notice so that it might be read by a person in a wheelchair). The notices shall be in a form prescribed by the Deputy Assistant Secretary for Federal Contract Compliance of the U.S. Department of Labor (Deputy Assistant Secretary) and shall be provided by or through the Contracting Officer.

(3) The Contractor shall notify each labor union or representative of workers with which it has a collective bargaining agreement or other contract understanding, that the Contractor is bound by the terms of Section 503 of

the Act and is committed to take affirmative action to employ, and advance in employment, qualified individuals with physical or mental disabilities.

(c) Noncompliance. If the Contractor does not comply with the requirements of this clause, appropriate actions may be taken under the rules, regulations, and relevant orders of the Secretary issued pursuant to the Act.

(d) Subcontracts. The Contractor shall include the terms of this clause in every subcontract or purchase order in excess of $10,000 unless exempted by rules, regulations, or orders of the Secretary. The Contractor shall act as specified by the Deputy Assistant Secretary to enforce the terms, including action for noncompliance.

(End of clause)

52.222-37 EMPLOYMENT REPORTS ON SPECIAL DISABLED VETERANS, VETERANS OF THE VIETNAM ERA, AND OTHER ELIGIBLE VETERANS (DEC 2001)

(a) Unless the Contractor is a State or local government agency, the Contractor shall report at least annually, as required by the Secretary of Labor, on--

(1) The number of disabled veterans and the number of veterans of the Vietnam era in the workforce of the contractor by job category and hiring location; and

(2) The total number of new employees hired during the period covered by the report, and of that total, the number of disabled veterans, and the number of veterans of the Vietnam era.

(b) The above items shall be reported by completing the form entitled "Federal Contractor Veterans' Employment Report VETS-100."

(c) Reports shall be submitted no later than September 30 of each year beginning September 30, 1988.

(d) The employment activity report required by paragraph (a)(2) of this clause shall reflect total hires during the most recent 12-month period as of the ending date selected for the employment profile report required by paragraph (a)(1) of this clause. Contractors may select an ending date: (1) As of the end of any pay period during the period January through March 1st of the year the report is due, or (2) as of December 31, if the contractor has previous written approval from the Equal Employment Opportunity Commission to do so for purposes of submitting the Employer Information Report EEO-1 (Standard Form 100).

(e) The count of veterans reported according to paragraph (a) of this clause shall be based on voluntary disclosure. Each Contractor subject to the reporting requirements at 38 U.S.C. 4212 shall invite all disabled veterans and veterans of the Vietnam era who wish to benefit under the affirmative action program at 38 U.S.C. 4212 to identify themselves to the Contractor. The invitation shall state that the information is voluntarily provided; that the information will be kept confidential; that disclosure or refusal to provide the information will not subject the applicant or employee to any adverse treatment; and that the information will be used only in accordance with the regulations promulgated under 38 U.S.C. 4212.

(f) Subcontracts. The Contractor shall include the terms of this clause in every subcontract or purchase order of $10,000 or more unless exempted by rules, regulations, or orders of the Secretary.

(End of clause)

52.223-6 DRUG-FREE WORKPLACE (MAY 2001)

(a) Definitions. As used in this clause --

"Controlled substance" means a controlled substance in schedules I through V of section 202 of the Controlled Substances Act (21 U.S.C. 812) and as further defined in regulation at 21 CFR 1308.11 - 1308.15.

"Conviction" means a finding of guilt (including a plea of nolo contendere) or imposition of sentence, or both, by any judicial body charged with the responsibility to deter- mine violations of the Federal or State criminal drug statutes.

"Criminal drug statute" means a Federal or non-Federal criminal statute involving the manufacture, distribution, dispensing, possession, or use of any controlled substance.

"Drug-free workplace" means the site(s) for the performance of work done by the Contractor in connection with a specific contract at which employees of the Contractor are prohibited from engaging in the unlawful manufacture, distribution, dispensing, possession, or use of a controlled substance.

"Employee" means an employee of a Contractor directly engaged in the performance of work under a Government contract. "Directly engaged" is defined to include all direct cost employees and any other Contractor employee who has other than a minimal impact or involvement in contract performance.

"Individual" means an offeror/contractor that has no more than one employee including the offeror/contractor.

(b) The Contractor, if other than an individual, shall-- within 30 days after award (unless a longer period is agreed to in writing for contracts of 30 days or more performance duration), or as soon as possible for contracts of less than 30 days performance duration--

(1) Publish a statement notifying its employees that the unlawful manufacture, distribution, dispensing, possession, or use of a controlled substance is prohibited in the Contractor's workplace and specifying the actions that will be taken against employees for violations of such prohibition;

(2) Establish an ongoing drug-free awareness program to inform such employees about--

(i) The dangers of drug abuse in the workplace;

(ii) The Contractor's policy of maintaining a drug-free workplace;

(iii) Any available drug counseling, rehabilitation, and employee assistance programs; and

(iv) The penalties that may be imposed upon employees for drug abuse violations occurring in the workplace;

(3) Provide all employees engaged in performance of the contract with a copy of the statement required by subparagraph (b)(1) of this clause;

(4) Notify such employees in writing in the statement required by subparagraph (b)(1) of this clause that, as a condition of continued employment on this contract, the employee will--

(i) Abide by the terms of the statement; and

(ii) Notify the employer in writing of the employee's conviction under a criminal drug statute for a violation occurring in the workplace no later than 5 days after such conviction.

(5) Notify the Contracting Officer in writing within 10 days after receiving notice under subdivision (b)(4)(ii) of this clause, from an employee or otherwise receiving actual notice of such conviction. The notice shall include the position title of the employee;

(6) Within 30 days after receiving notice under subdivision (b)(4)(ii) of this clause of a conviction, take one of the following actions with respect to any employee who is convicted of a drug abuse violation occurring in the workplace:

(i) Taking appropriate personnel action against such employee, up to and including termination; or

(ii) Require such employee to satisfactorily participate in a drug abuse assistance or rehabilitation program approved for such purposes by a Federal, State, or local health, law enforcement, or other appropriate agency; and

(7) Make a good faith effort to maintain a drug-free workplace through implementation of subparagraphs (b)(1) though (b)(6) of this clause.

(c) The Contractor, if an individual, agrees by award of the contract or acceptance of a purchase order, not to engage in the unlawful manufacture, distribution, dispensing, possession, or use of a controlled substance while performing this contract.

(d) In addition to other remedies available to the Government, the Contractor's failure to comply with the requirements of paragraph (b) or (c) of this clause may, pursuant to FAR 23.506, render the Contractor subject to suspension of contract payments, termination of the contract for default, and suspension or debarment.

(End of clause)

52.223-14 TOXIC CHEMICAL RELEASE REPORTING (AUG 2003)

(a) Unless otherwise exempt, the Contractor, as owner or operator of a facility used in the performance of this contract, shall file by July 1 for the prior calendar year an annual Toxic Chemical Release Inventory Form (Form R) as described in sections 313(a) and (g) of the Emergency Planning and Community Right-to-Know Act of 1986 (EPCRA) (42 U.S.C. 11023(a) and (g)), and section 6607 of the Pollution Prevention Act of 1990 (PPA) (42 U.S.C. 13106). The Contractor shall file, for each facility subject to the Form R filing and reporting requirements, the annual Form R throughout the life of the contract.

(b) A Contractor-owned or -operated facility used in the performance of this contract is exempt from the requirement to file an annual Form R if--

(1) The facility does not manufacture, process, or otherwise use any toxic chemicals listed in 40 CFR 372.65;

(2) The facility does not have 10 or more full-time employees as specified in section 313(b)(1)(A) of EPCRA, 42 U.S.C. 11023(b)(1)(A);

(3) The facility does not meet the reporting thresholds of toxic chemicals established under of EPCRA, 42 U.S.C. 11023(f) (including the alternate thresholds at 40 CFR 372.27, provided an appropriate certification form has been filed with EPA);

(4) The facility does not fall within the following Standard Industrial Classification (SIC) codes or their corresponding North American Industry Classification System sectors:

(i) Major group code 10 (except 1011, 1081, and 1094.

(ii) Major group code 12 (except 1241).

(iii) Major group codes 20 through 39.

(iv) Industry code 4911, 4931, or 4939 (limited to facilities that combust coal and/or oil for the purpose of generating power for distribution in commerce).

(v) Industry code 4953 (limited to facilities regulated under the Resource Conservation and Recovery Act, Subtitle C (42 U.S.C. 6921, et seq.)), 5169, 5171, or 7389 (limited to facilities primarily engaged in solvent recovery services on a contract or fee basis); or

(5) The facility is not located in the United States or its outlying areas.

(c) If the Contractor has certified to an exemption in accordance with one or more of the criteria in paragraph (b) of this clause, and after award of the contract circumstances change so that any of its owned or operated facilities used in the performance of this contract is no longer exempt--

(1) The Contractor shall notify the Contracting Officer; and

(2) The Contractor, as owner or operator of a facility used in the performance of this contract that is no longer exempt, shall (i) submit a Toxic Chemical Release Inventory Form (Form R) on or before July 1 for the prior calendar year during which the facility becomes eligible; and (ii) continue to file the annual Form R for the life of the contract for such facility.

(d) The Contracting Officer may terminate this contract or take other action as appropriate, if the Contractor fails to comply accurately and fully with the EPCRA and PPA toxic chemical release filing and reporting requirements.

(e) Except for acquisitions of commercial items, as defined in FAR Part 2, the Contractor shall--

(1) For competitive subcontracts expected to exceed $100,000 (including all options), include a solicitation provision substantially the same as the provision at FAR 52.223-13, Certification of Toxic Chemical Release Reporting; and

(2) Include in any resultant subcontract exceeding $100,000 (including all options), the substance of this clause, except this paragraph (e).

(End of clause)

52.225-13 RESTRICTIONS ON CERTAIN FOREIGN PURCHASES (JAN 2004)

(a) Except as authorized by the Office of Foreign Assets Control (OFAC) in the Department of the Treasury, the Contractor shall not acquire, for use in the performance of this contract, any supplies or services if any proclamation, Executive order, or statute administered by OFAC, or if OFAC's implementing regulations at 31 CFR chapter V, would prohibit such a transaction by a person subject to the jurisdiction of the United States.

(b) Except as authorized by OFAC, most transactions involving Cuba, Iran, Libya, and Sudan are prohibited, as are most imports from North Korea, into the United States or its outlying areas. Lists of entities and individuals subject to economic sanctions are included in OFAC's List of Specially Designated Nationals and Blocked Persons at TerList1.html. More information about these restrictions, as well as updates, is available in the OFAC's regulations at 31 CFR chapter V and/or on OFAC's Web site at http://www.treas.gov/ofac.

(c) The Contractor shall insert this clause, including this paragraph (c), in all subcontracts.

(End of clause)

52.226-1 UTILIZATION OF INDIAN ORGANIZATIONS AND INDIAN-OWNED ECONOMIC ENTERPRISES (JUN 2000)

(a) Definitions. As used in this clause:

"Indian" means any person who is a member of any Indian tribe, band, group, pueblo or community that is

recognized by the Federal Government as eligible for services from the Bureau of Indian Affairs (BIA) in accordance with 25 U.S.C. 1452(c) and any ``Native" as defined in the Alaska Native Claims Settlement Act (43 U.S.C. 1601).

"Indian organization" means the governing body of any Indian tribe or entity established or recognized by the governing body of an Indian tribe for the purposes of 25 U.S.C., chapter 17.

"Indian-owned economic enterprise" means any Indian-owned (as determined by the Secretary of the Interior) commercial, industrial, or business activity established or organized for the purpose of profit, provided that Indian ownership constitutea not less than 51 percent of the enterprise.

"Indian tribe" means any Indian tribe, band, group, pueblo or community, including native villages and native groups (including corporations organized by Kenai, Juneau, Sitka, and Kodiak) as defined in the Alaska Native Claims Settlement Act, that is recognized by the Federal Government as eligible for services from BIA in accordance with 25 U.S.C. 1542(c).

"Interested party" means a prime contractor or an actual or prospective offeror whose direct economic interest would be affected by the award of a subcontract or by the failure to award a subcontract.

(b) The Contractor shall use its best efforts to give Indian organizations and Indian-owned economic enterprises (25 U.S.C. 1544) the maximum practicable opportunity to participate in the subcontracts it awards to the fullest extent consistent with efficient performance of its contract.

(1) The Contracting Officer and the Contractor, acting in good faith, may rely on the representation of an Indian organization or Indian-owned economic enterprise as to its eligibility, unless an interested party challenges its status or the Contracting Officer has independent reason to question that status. In the event of a challenge to the representation of a subcontractor, the Contracting Officer will refer the matter to the U.S. Department of the Interior, Bureau of Indian Affairs (BIA), Attn: Chief, Division of Contracting and Grants Administration, 1849 C Street, NW., MS 2626-MIB, Washington, DC 20240-4000.

The BIA will determine the eligibility and notify the Contracting Officer. No incentive payment will be made within 50 working days of subcontract award or while a challenge is pending. If a subcontractor is determined to be an ineligible participant, no incentive payment will be made under the Indian Incentive Program.

(2) The Contractor may request an adjustment under the Indian Incentive Program to the following:

(i) The estimated cost of a cost-type contract.

(ii) The target cost of a cost-plus-incentive-fee prime contract.

(iii) The target cost and ceiling price of a fixed-price incentive prime contract.

(iv) The price of a firm-fixed-price prime contract.

(3) The amount of the adjustment to the prime contract is 5 percent of the estimated cost, target cost, or firm-fixed-price included in the subcontract initially awarded to the Indian organization or Indian-owned economic enterprise.

(4) The Contractor has the burden of proving the amount claimed and must assert its request for an adjustment prior to completion of contract performance.

(c) The Contracting Officer, subject to the terms and conditions of the contract and the availability of funds, will authorize an incentive payment of 5 percent of the amount paid to the subcontractor. The Contracting Officer will seek funding in accordance with agency procedures.

(End of clause)

52.227-1 AUTHORIZATION AND CONSENT (JUL 1995)

(a) The Government authorizes and consents to all use and manufacture, in performing this contract or any subcontract at any tier, of any invention described in and covered by a United States patent (1) embodied in the structure or composition of any article the delivery of which is accepted by the Government under this contract or (2) used in machinery, tools, or methods whose use necessarily results from compliance by the Contractor or a subcontractor with (i) specifications or written provisions forming a part of this contract or (ii) specific written instructions given by the Contracting Officer directing the manner of performance. The entire liability to the Government for infringement of a patent of the United States shall be determined solely by the provisions of the indemnity clause, if any, included in this contract or any subcontract hereunder (including any lower-tier subcontract), and the Government assumes liability for all other infringement to the extent of the authorization and consent hereinabove granted.

(b) The Contractor agrees to include, and require inclusion of, this clause, suitably modified to identify the parties, in all subcontracts at any tier for supplies or services (including construction, architect-engineer services, and materials, supplies, models, samples, and design or testing services expected to exceed the simplified acquisition threshold (however, omission of this clause from any subcontract, including those at or below the simplified acquisition threshold, does not affect this authorization and consent.)

(End of clause)

52.227-2 NOTICE AND ASSISTANCE REGARDING PATENT AND COPYRIGHT INFRINGEMENT (AUG 1996)

(a) The Contractor shall report to the Contracting Officer, promptly and in reasonable written detail, each notice or claim of patent or copyright infringement based on the performance of this contract of which the Contractor has knowledge.

(b) In the event of any claim or suit against the Government on account of any alleged patent or copyright infringement arising out of the performance of this contract or out of the use of any supplies furnished or work or services performed under this contract, the Contractor shall furnish to the Government, when requested by the Contracting Officer, all evidence and information in possession of the Contractor pertaining to such suit or claim. Such evidence and information shall be furnished at the expense of the Government except where the Contractor has agreed to indemnify the Government.

(c) The Contractor agrees to include, and require inclusion of, this clause in all subcontracts at any tier for supplies or services (including construction and architect-engineer subcontracts and those for material, supplies, models, samples, or design or testing services) expected to exceed the simplified acquisition threshold at (FAR) 2.101.to exceed the dollar amount set forth in 13.000 of the Federal Acquisition Regulation (FAR).

(End of clause)

52.227-3 PATENT INDEMNITY (APR 1984)

(a) The Contractor shall indemnify the Government and its officers, agents, and employees against liability, including costs, for infringement of any United States patent (except a patent issued upon an application that is now or may hereafter be withheld from issue pursuant to a Secrecy Order under 35 U.S.C. 181) arising out of the manufacture or delivery of supplies, the performance of services, or the construction, alteration, modification, or

repair of real property (hereinafter referred to as "construction work") under this contract, or out of the use or disposal by or for the account of the Government of such supplies or construction work.

(b) This indemnity shall not apply unless the Contractor shall have been informed as soon as practicable by the Government of the suit or action alleging such infringement and shall have been given such opportunity as is afforded by applicable laws, rules, or regulations to participate in its defense. Further, this indemnity shall not apply to (1) an infringement resulting from compliance with specific written instructions of the Contracting Officer directing a change in the supplies to be delivered or in the materials or equipment to be used, or directing a manner of performance of the contract not normally used by the Contractor, (2) an infringement resulting from addition to or change in supplies or components furnished or construction work performed that was made subsequent to delivery or performance, or (3) a claimed infringement that is unreasonably settled without the consent of the Contractor, unless required by final decree of a court of competent jurisdiction.

(End of clause)

52.228-1 BID GUARANTEE (SEP 1996)

(a) Failure to furnish a bid guarantee in the proper form and amount, by the time set for opening of bids, may be cause for rejection of the bid.

(b) The bidder shall furnish a bid guarantee in the form of a firm commitment, e.g., bid bond supported by good and sufficient surety or sureties acceptable to the Government, postal money order, certified check, cashier's check, irrevocable letter of credit, or, under Treasury Department regulations, certain bonds or notes of the United States. The Contracting Officer will return bid guarantees, other than bid bonds, (1) to unsuccessful bidders as soon as practicable after the opening of bids, and (2) to the successful bidder upon execution of contractual documents and bonds (including any necessary coinsurance or reinsurance agreements), as required by the bid as accepted.-

(c) The amount of the bid guarantee shall be 20% percent of the bid price or $3,000,000.00, whichever is less.-

(d) If the successful bidder, upon acceptance of its bid by the Government within the period specified for acceptance, fails to execute all contractual documents or furnish executed bond(s) within 10 days after receipt of the forms by the bidder, the Contracting Officer may terminate the contract for default.-

(e) In the event the contract is terminated for default, the bidder is liable for any cost of acquiring the work that exceeds the amount of its bid, and the bid guarantee is available to offset the difference.

(End of clause)

52.228-2 ADDITIONAL BOND SECURITY (OCT 1997)

The Contractor shall promptly furnish additional security required to protect the Government and persons supplying labor or materials under this contract if--

(a) Any surety upon any bond, or issuing financial institution for other security, furnished with this contract becomes unacceptable to the Government.

(b) Any surety fails to furnish reports on its financial condition as required by the Government;

(c) The contract price is increased so that the penal sum of any bond becomes inadequate in the opinion of the Contracting Officer; or

(d) An irrevocable letter of credit (ILC) used as security will expire before the end of the period of required security. If the Contractor does not furnish an acceptable extension or replacement ILC, or other acceptable substitute, at least

30 days before an ILC's scheduled expiration, the Contracting officer has the right to immediately draw on the ILC.

(End of clause)

52.228-11 PLEDGES OF ASSETS (FEB 1992)

(a) Offerors shall obtain from each person acting as an individual surety on a bid guarantee, a performance bond, or a payment bond--

(1) Pledge of assets; and

(2) Standard Form 28, Affidavit of Individual Surety.

(b) Pledges of assets from each person acting as an individual surety shall be in the form of--

(1) Evidence of an escrow account containing cash, certificates of deposit, commercial or Government securities, or other assets described in FAR 28.203-2 (except see 28.203-2(b)(2) with respect to Government securities held in book entry form) and/or;

(2) A recorded lien on real estate. The offeror will be required to provide--

(i) Evidence of title in the form of a certificate of title prepared by a title insurance company approved by the United States Department of Justice. This title evidence must show fee simple title vested in the surety along with any concurrent owners; whether any real estate taxes are due and payable; and any recorded encumbrances against the property, including the lien filed in favor of the Government as required by FAR 28.203-3(d);

(ii) Evidence of the amount due under any encumbrance shown in the evidence of title;

(iii) A copy of the current real estate tax assessment of the property or a current appraisal dated no earlier than 6 months prior to the date of the bond, prepared by a professional appraiser who certifies that the appraisal has been conducted in accordance with the generally accepted appraisal standards as reflected in the Uniform Standards of Professional Appraisal Practice, as promulgated by the Appraisal Foundation.

(End of clause)

52.228-14 IRREVOCABLE LETTER OF CREDIT (DEC 1999)

(a) “Irrevocable letter of credit” (ILC), as used in this clause, means a written commitment by a federally insured financial institution to pay all or part of a stated amount of money, until the expiration date of the letter, upon presentation by the Government (the beneficiary) of a written demand therefor. Neither the financial institution nor the offeror/Contractor can revoke or condition the letter of credit.

(b) If the offeror intends to use an ILC in lieu of a bid bond, or to secure other types of bonds such as performance and payment bonds, the letter of credit and letter of confirmation formats in paragraphs (e) and (f) of this clause shall be used.

(c) The letter of credit shall be irrevocable, shall require presentation of no document other than a written demand and the ILC (including confirming letter, if any), shall be issued/confirmed by an acceptable federally insured financial institution as provided in paragraph (d) of this clause, and--

(1) If used as a bid guarantee, the ILC shall expire no earlier than 60 days after the close of the bid acceptance period;

(2) If used as an alternative to corporate or individual sureties as security for a performance or payment bond, the offeror/Contractor may submit an ILC with an initial expiration date estimated to cover the entire period for which financial security is required or may submit an ILC with an initial expiration date that is a minimum period of one year from the date of issuance. The ILC shall provide that, unless the issuer provides the beneficiary written notice of non-renewal at least 60 days in advance of the current expiration date, the ILC is automatically extended without amendment for one year from the expiration date, or any future expiration date, until the period of required coverage is completed and the Contracting Officer provides the financial institution with a written statement waiving the right to payment. The period of required coverage shall be:

(i) For contracts subject to the Miller Act, the later of--

(A) One year following the expected date of final payment;

(B) For performance bonds only, until completion of any warranty period; or

(C) For payment bonds only, until resolution of all claims filed against the payment bond during the one-year period following final payment.

(ii) For contracts not subject to the Miller Act, the later of--

(A) 90 days following final payment; or

(B) For performance bonds only, until completion of any warranty period.

(d) Only federally insured financial institutions rated investment grade or higher shall issue or confirm the ILC. The offeror/Contractor shall provide the Contracting Officer a credit rating that indicates the financial institution has the required rating(s) as of the date of issuance of the ILC. Unless the financial institution issuing the ILC had letter of credit business of less than $25 million in the past year, ILCs over $5 million must be confirmed by another acceptable financial institution that had letter of credit business of less than $25 million in the past year.

(e) The following format shall be used by the issuing financial institution to create an ILC:

_____

[Issuing Financial Institution's Letterhead or Name and Address]

Issue Date _____

IRREVOCABLE LETTER OF CREDIT NO. _____

Account party's name _____

Account party's address _____

For Solicitation No. _____(for reference only)

TO: [U.S. Government agency]

[U.S. Government agency's address]

1. We hereby establish this irrevocable and transferable Letter of Credit in your favor for one or more drawings up to United States $_____. This Letter of Credit is payable at [issuing financial institution's and, if any, confirming financial institution's] office at [issuing financial institution's address and, if any, confirming financial institution's address] and expires with our close of business on _____, or any automatically extended expiration date.

2. We hereby undertake to honor your or the transferee's sight draft(s) drawn on the issuing or, if any, the

confirming financial institution, for all or any part of this credit if presented with this Letter of Credit and confirmation, if any, at the office specified in paragraph 1 of this Letter of Credit on or before the expiration date or any automatically extended expiration date.

3. [This paragraph is omitted if used as a bid guarantee, and subsequent paragraphs are renumbered.] It is a condition of this Letter of Credit that it is deemed to be automatically extended without amendment for one year from the expiration date hereof, or any future expiration date, unless at least 60 days prior to any expiration date, we notify you or the transferee by registered mail, or other receipted means of delivery, that we elect not to consider this Letter of Credit renewed for any such additional period. At the time we notify you, we also agree to notify the account party (and confirming financial institution, if any) by the same means of delivery.

4. This Letter of Credit is transferable. Transfers and assignments of proceeds are to be effected without charge to either the beneficiary or the transferee/assignee of proceeds. Such transfer or assignment shall be only at the written direction of the Government (the beneficiary) in a form satisfactory to the issuing financial institution and the confirming financial institution, if any.

5. This Letter of Credit is subject to the Uniform Customs and Practice (UCP) for Documentary Credits, 1993 Revision, International Chamber of Commerce Publication No. 500, and to the extent not inconsistent therewith, to the laws of _____ [state of confirming financial institution, if any, otherwise state of issuing financial institution].

6. If this credit expires during an interruption of business of this financial institution as described in Article 17 of the UCP, the financial institution specifically agrees to effect payment if this credit is drawn against within 30 days after the resumption of our business.

Sincerely,

_____

[Issuing financial institution]

(f) The following format shall be used by the financial institution to confirm an ILC:

_____
[Confirming Financial Institution's Letterhead or Name and Address]

(Date) _____

Our Letter of Credit Advice Number _____

Beneficiary: _____ [U.S. Government agency]

Issuing Financial Institution: _____

Issuing Financial Institution's LC No.: _____

Gentlemen:

1. We hereby confirm the above indicated Letter of Credit, the original of which is attached, issued by _____ [name of issuing financial institution] for drawings of up to United States dollars _____/U.S. $_____ and expiring with our close of business on _____ [the expiration date], or any automatically extended expiration date.

2. Draft(s) drawn under the Letter of Credit and this Confirmation are payable at our office located at _____.

3. We hereby undertake to honor sight draft(s) drawn under and presented with the Letter of Credit and this Confirmation at our offices as specified herein.

4. [This paragraph is omitted if used as a bid guarantee, and subsequent paragraphs are renumbered.] It is a condition of this confirmation that it be deemed automatically extended without amendment for one year from the expiration date hereof, or any automatically extended expiration date, unless:

(a) At least 60 days prior to any such expiration date, we shall notify the Contracting Officer, or the transferee and the issuing financial institution, by registered mail or other receipted means of delivery, that we elect not to consider this confirmation extended for any such additional period; or

(b) The issuing financial institution shall have exercised its right to notify you or the transferee, the account party, and ourselves, of its election not to extend the expiration date of the Letter of Credit.

5. This confirmation is subject to the Uniform Customs and Practice (UCP) for Documentary Credits, 1993 Revision, International Chamber of Commerce Publication No. 500, and to the extent not inconsistent therewith, to the laws of _____ [state of confirming financial institution].

6. If this confirmation expires during an interruption of business of this financial institution as described in Article 17 of the UCP, we specifically agree to effect payment if this credit is drawn against within 30 days after the resumption of our business.

Sincerely,

_____

[Confirming financial institution]

(g) The following format shall be used by the Contracting Officer for a sight draft to draw on the Letter of Credit:

SIGHT DRAFT

_____

[City, State]

(Date) _____

[Name and address of financial institution]

Pay to the order of _____ [Beneficiary Agency] _____ the sum of United States $_____.
This draft is drawn under Irrevocable Letter of Credit No. _____.

_____

[Beneficiary Agency]

By: _____

(End of clause)

52.228-16 PERFORMANCE AND PAYMENT BONDS--OTHER THAN CONSTRUCTION (JUL 2000)

(a) Definitions. As used in this clause--

Original contract price means the award price of the contract or, for requirements contracts, the price payable for the estimated quantity; or, for indefinite-quantity contracts, the price payable for the specified minimum quantity. Original contract price does not include the price of any options, except those options exercised at the time of contract award.

(b) The Contractor shall furnish a performance bond (Standard Form 1418) for the protection of the Government in an amount equal to 100 percent of the original contract price and a payment bond (Standard Form 1416) in an amount equal to 100 percent of the original contract price.

(c) The Contractor shall furnish all executed bonds, including any necessary reinsurance agreements, to the Contracting Officer, within 10 days after receipt of award, but in any event, before starting work.

(d) The Government may require additional performance and payment bond protection if the contract price is increased. The Government may secure the additional protection by directing the Contractor to increase the penal amount of the existing bonds or to obtain additional bonds.

(e) The bonds shall be in the form of firm commitment, supported by corporate sureties whose names appear on the list contained in Treasury Department Circular 570, individual sureties, or by other acceptable security such as postal money order, certified check, cashier's check, irrevocable letter of credit, or, in accordance with Treasury Department regulations, certain bonds or notes of the United States. Treasury Circular 570 is published in the Federal Register, or may be obtained from the U.S. Department of Treasury, Financial Management Service, Surety Bond Branch, 401 14th Street, NW., 2nd Floor, West Wing, Washington, DC 20227.

(End of clause)

52.229-3 FEDERAL, STATE, AND LOCAL TAXES (APR 2003)

(a) As used in this clause--

"Contract date" means the date set for bid opening or, if this is a negotiated contract or a modification, the effective date of this contract or modification.

"All applicable Federal, State, and local taxes and duties" means all taxes and duties, in effect on the contract date, that the taxing authority is imposing and collecting on the transactions or property covered by this contract.

"After-imposed Federal tax" means any new or increased Federal excise tax or duty, or tax that was exempted or excluded on the contract date but whose exemption was later revoked or reduced during the contract period, on the transactions or property covered by this contract that the Contractor is required to pay or bear as the result of legislative, judicial, or administrative action taking effect after the contract date. It does not include social security tax or other employment taxes.

"After-relieved Federal tax" means any amount of Federal excise tax or duty, except social security or other employment taxes, that would otherwise have been payable on the transactions or property covered by this contract, but which the Contractor is not required to pay or bear, or for which the Contractor obtains a refund or drawback, as the result of legislative, judicial, or administrative action taking effect after the contract date.

Local taxes includes taxes imposed by a possession or territory of the United States, Puerto Rico, or the Northern Mariana Islands, if the contract is performed wholly or partly in any of those areas.

(b) The contract price includes all applicable Federal, State, and local taxes and duties.

(c) The contract price shall be increased by the amount of any after-imposed Federal tax, provided the Contractor warrants in writing that no amount for such newly imposed Federal excise tax or duty or rate increase was included in the contract price, as a contingency reserve or otherwise.

(d) The contract price shall be decreased by the amount of any after-relieved Federal tax.

(e) The contract price shall be decreased by the amount of any Federal excise tax or duty, except social security or other employment taxes, that the Contractor is required to pay or bear, or does not obtain a refund of, through the Contractor's fault, negligence, or failure to follow instructions of the Contracting Officer.

(f) No adjustment shall be made in the contract price under this clause unless the amount of the adjustment exceeds $250.

(g) The Contractor shall promptly notify the Contracting Officer of all matters relating to any Federal excise tax or duty that reasonably may be expected to result in either an increase or decrease in the contract price and shall take appropriate action as the Contracting Officer directs.

(h) The Government shall, without liability, furnish evidence appropriate to establish exemption from any Federal, State, or local tax when the Contractor requests such evidence and a reasonable basis exists to sustain the exemption.

(End of clause)

52.232-11 EXTRAS (APR 1984)

Except as otherwise provided in this contract, no payment for extras shall be made unless such extras and the price therefore have been authorized in writing by the Contracting Officer.

(End of clause)

52.232-17 INTEREST (JUNE 1996)

(a) Except as otherwise provided in this contract under a Price Reduction for Defective Cost or Pricing Data clause or a Cost Accounting Standards clause, all amounts that become payable by the Contractor to the Government under this contract (net of any applicable tax credit under the Internal Revenue Code (26 U.S.C. 1481)) shall bear simple interest from the date due until paid unless paid within 30 days of becoming due. The interest rate shall be the interest rate established by the Secretary of the Treasury as provided in Section 12 of the Contract Disputes Act of 1978 (Public Law 95-563), which is applicable to the period in which the amount becomes due, as provided in paragraph (b) of this clause, and then at the rate applicable for each six-month period as fixed by the Secretary until the amount is paid. reproduce, prepare derivative works, distribute copies to the public, and (b) Amounts shall be due at the earliest of the following dates:

(1) The date fixed under this contract.

(2) The date of the first written demand for payment consistent with this contract, including any demand resulting from a default termination.

(3) The date the Government transmits to the Contractor a proposed supplemental agreement to confirm completed negotiations establishing the amount of debt.

(4) If this contract provides for revision of prices, the date of written notice to the Contractor stating the amount of refund payable in connection with a pricing proposal or a negotiated pricing agreement not confirmed by contract modification.

(c) The interest charge made under this clause may be reduced under the procedures prescribed in 32.614-2 of the Federal Acquisition Regulation in effect on the date of this contract.

(End of clause)

52.232-23 ASSIGNMENT OF CLAIMS (JAN 1986)

(a) The Contractor, under the Assignment of Claims Act, as amended, 31 U.S.C. 3727, 41 U.S.C. 15 (hereafter referred to as "the Act"), may assign its rights to be paid amounts due or to become due as a result of the performance of this contract to a bank, trust company, or other financing institution, including any Federal lending agency. The assignee under such an assignment may thereafter further assign or reassign its right under the original assignment to any type of financing institution described in the preceding sentence.

(b) Any assignment or reassignment authorized under the Act and this clause shall cover all unpaid amounts payable under this contract, and shall not be made to more than one party, except that an assignment or reassignment may be made to one party as agent or trustee for two or more parties participating in the financing of this contract.

(c) The Contractor shall not furnish or disclose to any assignee under this contract any classified document (including this contract) or information related to work under this contract until the Contracting Officer authorizes such action in writing.

(End of clause)

52.232-34 PAYMENT BY ELECTRONIC FUNDS TRANSFER—OTHER THAN CENTRAL CONTRACTOR REGISTRATION (MAY 1999)

(a) Method of payment. (1) All payments by the Government under this contract shall be made by electronic funds transfer (EFT) except as provided in paragraph (a)(2) of this clause. As used in this clause, the term “EFT” refers to the funds transfer and may also include the payment information transfer.

(2) In the event the Government is unable to release one or more payments by EFT, the Contractor agrees to either--

(i) Accept payment by check or some other mutually agreeable method of payment; or

(ii) Request the Government to extend payment due dates until such time as the Government makes payment by EFT (but see paragraph (d) of this clause).

(b) Mandatory submission of Contractor's EFT information. (1) The Contractor is required to provide the Government with the information required to make payment by EFT (see paragraph (j) of this clause). The Contractor shall provide this information directly to the office designated in this contract to receive that information (hereafter: “designated office”") by no later than 15 days prior to submission of the first request for payment. If not otherwise specified in this contract, the payment office is the designated office for receipt of the Contractor's EFT information. If more than one designated office is named for the contract, the Contractor shall provide a separate notice to each office. In the event that the EFT information changes, the Contractor shall be responsible for providing the updated information to the designated office(s).

(2) If the Contractor provides EFT information applicable to multiple contracts, the Contractor shall specifically state the applicability of this EFT information in terms acceptable to the designated office. However, EFT information supplied to a designated office shall be applicable only to contracts that identify that designated office as the office to receive EFT information for that contract.

(c) Mechanisms for EFT payment. The Government may make payment by EFT through either the Automated Clearing House (ACH) network, subject to the rules of the National Automated Clearing House Association, or the Fedwire Transfer System. The rules governing Federal payments through the ACH are contained in 31 CFR part 210.

(d) Suspension of payment. (1) The Government is not required to make any payment under this contract until after receipt, by the designated office, of the correct EFT payment information from the Contractor. Until receipt of the correct EFT information, any invoice or contract financing request shall be deemed not to be a proper invoice for the purpose of prompt payment under this contract. The prompt payment terms of the contract regarding notice of an improper invoice and delays in accrual of interest penalties apply.

(2) If the EFT information changes after submission of correct EFT information, the Government shall begin using the changed EFT information no later than 30 days after its receipt by the designated office to the extent payment is made by EFT. However, the Contractor may request that no further payments be made until the updated EFT information is implemented by the payment office. If such suspension would result in a late payment under the prompt payment terms of this contract, the Contractor's request for suspension shall extend the due date for payment by the number of days of the suspension.

(e) Liability for uncompleted or erroneous transfers. (1) If an uncompleted or erroneous transfer occurs because the Government used the Contractor's EFT information incorrectly, the Government remains responsible for--

(i) Making a correct payment;

(ii) Paying any prompt payment penalty due; and

(iii) Recovering any erroneously directed funds.

(2) If an uncompleted or erroneous transfer occurs because the Contractor's EFT information was incorrect, or was revised within 30 days of Government release of the EFT payment transaction instruction to the Federal Reserve System, and--

(i) If the funds are no longer under the control of the payment office, the Government is deemed to have made payment and the Contractor is responsible for recovery of any erroneously directed funds; or

(ii) If the funds remain under the control of the payment office, the Government shall not make payment and the provisions of paragraph (d) shall apply.

(f) EFT and prompt payment. A payment shall be deemed to have been made in a timely manner in accordance with the prompt payment terms of this contract if, in the EFT payment transaction instruction released to the Federal Reserve System, the date specified for settlement of the payment is on or before the prompt payment due date, provided the specified payment date is a valid date under the rules of the Federal Reserve System.

(g) EFT and assignment of claims. If the Contractor assigns the proceeds of this contract as provided for in the assignment of claims terms of this contract, the Contractor shall require as a condition of any such assignment, that the assignee shall provide the EFT information required by paragraph (j) of this clause to the designated office, and shall be paid by EFT in accordance with the terms of this clause. In all respects, the requirements of this clause shall apply to the assignee as if it were the Contractor. EFT information that shows the ultimate recipient of the transfer to be other than the Contractor, in the absence of a proper assignment of claims acceptable to the Government, is incorrect EFT information within the meaning of paragraph (d) of this clause.

(h) Liability for change of EFT information by financial agent. The Government is not liable for errors resulting from changes to EFT information provided by the Contractor's financial agent.

(i) Payment information. The payment or disbursing office shall forward to the Contractor available payment information that is suitable for transmission as of the date of release of the EFT instruction to the Federal Reserve System. The Government may request the Contractor to designate a desired format and method(s) for delivery of payment information from a list of formats and methods the payment office is capable of executing. However, the Government does not guarantee that any particular format or method of delivery is available at any particular payment office and retains the latitude to use the format and delivery method most convenient to the Government. If

the Government makes payment by check in accordance with paragraph (a) of this clause, the Government shall mail the payment information to the remittance address in the contract.

(j) EFT information. The Contractor shall provide the following information to the designated office. The Contractor may supply this data for this or multiple contracts (see paragraph (b) of this clause). The Contractor shall designate a single financial agent per contract capable of receiving and processing the EFT information using the EFT methods described in paragraph (c) of this clause.

(1) The contract number (or other procurement identification number).

(2) The Contractor's name and remittance address, as stated in the contract(s).

(3) The signature (manual or electronic, as appropriate), title, and telephone number of the Contractor official authorized to provide this information.

(4) The name, address, and 9-digit Routing Transit Number of the Contractor's financial agent.

(5) The Contractor's account number and the type of account (checking, saving, or lockbox).

(6) If applicable, the Fedwire Transfer System telegraphic abbreviation of the Contractor's financial agent.

(7) If applicable, the Contractor shall also provide the name, address, telegraphic abbreviation, and 9-digit Routing Transit Number of the correspondent financial institution receiving the wire transfer payment if the Contractor's financial agent is not directly on-line to the Fedwire Transfer System; and, therefore, not the receiver of the wire transfer payment.

(End of clause)

52.233-1 DISPUTES. (JUL 2002)

(a) This contract is subject to the Contract Disputes Act of 1978, as amended (41 U.S.C. 601-613).

(b) Except as provided in the Act, all disputes arising under or relating to this contract shall be resolved under this clause.

(c) Claim, as used in this clause, means a written demand or written assertion by one of the contracting parties seeking, as a matter of right, the payment of money in a sum certain, the adjustment or interpretation of contract terms, or other relief arising under or relating to this contract. However, a written demand or written assertion by the Contractor seeking the payment of money exceeding $100,000 is not a claim under the Act until certified. A voucher, invoice, or other routine request for payment that is not in dispute when submitted is not a claim under the Act. The submission may be converted to a claim under the Act, by complying with the submission and certification requirements of this clause, if it is disputed either as to liability or amount or is not acted upon in a reasonable time.

(d)(1) A claim by the Contractor shall be made in writing and, unless otherwise stated in this contract, submitted within 6 years after accrual of the claim to the Contracting Officer for a written decision. A claim by the Government against the Contractor shall be subject to a written decision by the Contracting Officer.

(2)(i) The contractors shall provide the certification specified in subparagraph (d)(2)(iii) of this clause when submitting any claim -

(A) Exceeding $100,000; or

(B) Regardless of the amount claimed, when using -

(1) Arbitration conducted pursuant to 5 U.S.C. 575-580; or

(2) Any other alternative means of dispute resolution (ADR) technique that the agency elects to handle in accordance with the Administrative Dispute Resolution Act (ADRA).

(ii) The certification requirement does not apply to issues in controversy that have not been submitted as all or part of a claim.

(iii) The certification shall state as follows: "I certify that the claim is made in good faith; that the supporting data are accurate and complete to the best of my knowledge and belief; that the amount requested accurately reflects the contract adjustment for which the Contractor believes the Government is liable; and that I am duly authorized to certify the claim on behalf of the Contractor.

(3) The certification may be executed by any person duly authorized to bind the Contractor with respect to the claim.

(e) For Contractor claims of $100,000 or less, the Contracting Officer must, if requested in writing by the Contractor, render a decision within 60 days of the request. For Contractor-certified claims over $100,000, the Contracting Officer must, within 60 days, decide the claim or notify the Contractor of the date by which the decision will be made.

(f) The Contracting Officer's decision shall be final unless the Contractor appeals or files a suit as provided in the Act.

(g) If the claim by the Contractor is submitted to the Contracting Officer or a claim by the Government is presented to the Contractor, the parties, by mutual consent, may agree to use alternative disput resolution (ADR). If the Contractor refuses an offer for ADR, the Contractor shall inform the Contracting Officer, in writing, of the Contractor's specific reasons for rejecting the request.

(h) The Government shall pay interest on the amount found due and unpaid from (1) the date the Contracting Officer receives the claim (certified, if required); or (2) the date that payment otherwise would be due, if that date is later, until the date of payment. With regard to claims having defective certifications, as defined in (FAR) 48 CFR 33.201, interest shall be paid from the date that the Contracting Officer initially receives the claim. Simple interest on claims shall be paid at the rate, fixed by the Secretary of the Treasury as provided in the Act, which is applicable to the period during which the Contracting Officer receives the claim and then at the rate applicable for each 6-month period as fixed by the Treasury Secretary during the pendency of the claim.

(i) The Contractor shall proceed diligently with performance of this contract, pending final resolution of any request for relief, claim, appeal, or action arising under the contract, and comply with any decision of the Contracting Officer.

(End of clause)

52.233-3 PROTEST AFTER AWARD (AUG. 1996)

(a) Upon receipt of a notice of protest (as defined in FAR 33.101) or a determination that a protest is likely (see FAR 33.102(d)), the Contracting Officer may, by written order to the Contractor, direct the Contractor to stop performance of the work called for by this contract. The order shall be specifically identified as a stop-work order issued under this clause. Upon receipt of the order, the Contractor shall immediately comply with its terms and take all reasonable steps to minimize the incurrence of costs allocable to the work covered by the order during the period of work stoppage. Upon receipt of the final decision in the protest, the Contracting Officer shall either--

(1) Cancel the stop-work order; or

(2) Terminate the work covered by the order as provided in the Default, or the Termination for Convenience of the

Government, clause of this contract.

(b) If a stop-work order issued under this clause is canceled either before or after a final decision in the protest, the Contractor shall resume work. The Contracting Officer shall make an equitable adjustment in the delivery schedule or contract price, or both, and the contract shall be modified, in writing, accordingly, if--

(1) The stop-work order results in an increase in the time required for, or in the Contractor's cost properly allocable to, the performance of any part of this contract; and

(2) The Contractor asserts its right to an adjustment within 30 days after the end of the period of work stoppage; provided, that if the Contracting Officer decides the facts justify the action, the Contracting Officer may receive and act upon a proposal at any time before final payment under this contract.

(c) If a stop-work order is not canceled and the work covered by the order is terminated for the convenience of the Government, the Contracting Officer shall allow reasonable costs resulting from the stop-work order in arriving at the termination settlement.

(d) If a stop-work order is not canceled and the work covered by the order is terminated for default, the Contracting Officer shall allow, by equitable adjustment or otherwise, reasonable costs resulting from the stop-work order.

(e) The Government's rights to terminate this contract at any time are not affected by action taken under this clause.

(f) If, as the result of the Contractor's intentional or negligent misstatement, misrepresentation, or miscertification, a protest related to this contract is sustained, and the Government pays costs, as provided in FAR 33.102(b)(2) or 33.104(h)(1), the Government may require the Contractor to reimburse the Government the amount of such costs. In addition to any other remedy available, and pursuant to the requirements of Subpart 32.6, the Government may collect this debt by offsetting the amount against any payment due the Contractor under any contract between the Contractor and the Government.

(End of clause)

52.239-1 PRIVACY OR SECURITY SAFEGUARDS (AUG 1996)

(a) The Contractor shall not publish or disclose in any manner, without the Contracting Officer's written consent, the details of any safeguards either designed or developed by the Contractor under this contract or otherwise provided by the Government.-

(b) To the extent required to carry out a program of inspection to safeguard against threats and hazards to the security, integrity, and confidentiality of Government data, the Contractor shall afford the Government access to the Contractor's facilities, installations, technical capabilities, operations, documentation, records, and databases.-

(c) If new or unanticipated threats or hazards are discovered by either the Government or the Contractor, or if existing safeguards have ceased to function, the discoverer shall immediately bring the situation to the attention of the other party.

(End of clause)

52.242-13 BANKRUPTCY (JUL 1995)

In the event the Contractor enters into proceedings relating to bankruptcy, whether voluntary or involuntary, the Contractor agrees to furnish, by certified mail or electronic commerce method authorized by the contract, written notification of the bankruptcy to the Contracting Officer responsible for administering the contract. This

notification shall be furnished within five days of the initiation of the proceedings relating to bankruptcy filing. This notification shall include the date on which the bankruptcy petition was filed, the identity of the court in which the bankruptcy petition was filed, and a listing of Government contract numbers and contracting offices for all Government contracts against which final payment has not been made. This obligation remains in effect until final payment under this contract.

(End of clause)

52.242-17 GOVERNMENT DELAY OF WORK (APR 1984)

(a) If the performance of all or any part of the work of this contract is delayed or interrupted (1) by an act of the Contracting Officer in the administration of this contract that is not expressly or impliedly authorized by this contract, or (2) by a failure of the Contracting Officer to act within the time specified in this contract, or within a reasonable time if not specified, an adjustment (excluding profit) shall be made for any increase in the cost of performance of this contract caused by the delay or interruption and the contract shall be modified in writing accordingly. Adjustment shall also be made in the delivery or performance dates and any other contractual term or condition affected by the delay or interruption. However, no adjustment shall be made under this clause for any delay or interruption to the extent that performance would have been delayed or interrupted by any other cause, including the fault or negligence of the Contractor, or for which an adjustment is provided or excluded under any other term or condition of this contract.

(b) A claim under this clause shall not be allowed (1) for any costs incurred more than 20 days before the Contractor shall have notified the Contracting Officer in writing of the act or failure to act involved, and (2) unless the claim, in an amount stated, is asserted in writing as soon as practicable after the termination of the delay or interruption, but not later than the day of final payment under the contract.

(End of clause)

52.243-1 CHANGES--FIXED-PRICE (APR 1984)

(a) The Contracting Officer may at any time, by written order, and without notice to the sureties, if any, make changes within the general scope of this contract in any one or more of the following:

(1) Drawings, designs, or specifications when the supplies to be furnished are to be specially manufactured for the Government in accordance with the drawings, designs, or specifications.

(2) Method of shipment or packing.

(3) Place of delivery.

(b) If any such change causes an increase or decrease in the cost of, or the time required for, performance of any part of the work under this contract, whether or not changed by the order, the Contracting Officer shall make an equitable adjustment in the contract price, the delivery schedule, or both, and shall modify the contract.

(c) The Contractor must assert its right to an adjustment under this clause within 30 days from the date of receipt of the written order. However, if the Contracting Officer decides that the facts justify it, the Contracting Officer may receive and act upon a proposal submitted before final payment of the contract.

(d) If the Contractor's proposal includes the cost of property made obsolete or excess by the change, the Contracting Officer shall have the right to prescribe the manner of the disposition of the property.

(e) Failure to agree to any adjustment shall be a dispute under the Disputes clause. However, nothing in this clause shall excuse the Contractor from proceeding with the contract as changed.

(End of clause)

52.244-2 SUBCONTRACTS (AUG 1998)

(a) Definitions. As used in this clause--

Approved purchasing system means a Contractor's purchasing system that has been reviewed and approved in accordance with Part 44 of the Federal Acquisition Regulation (FAR).

Consent to subcontract means the Contracting Officer's written consent for the Contractor to enter into a particular subcontract.

Subcontract means any contract, as defined in FAR Subpart 2.1, entered into by a subcontractor to furnish supplies or services for performance of the prime contract or a subcontract. It includes, but is not limited to, purchase orders, and changes and modifications to purchase orders.

(b) This clause does not apply to subcontracts for special test equipment when the contract contains the clause at FAR 52.245-18, Special Test Equipment.

(c) When this clause is included in a fixed-price type contract, consent to subcontract is required only on unpriced contract actions (including unpriced modifications or unpriced delivery orders), and only if required in accordance with paragraph (d) or (e) of this clause.

(d) If the Contractor does not have an approved purchasing system, consent to subcontract is required for any subcontract that--

(1) Is of the cost-reimbursement, time-and-materials, or labor-hour type; or

(2) Is fixed-price and exceeds--

(i) For a contract awarded by the Department of Defense, the Coast Guard, or the National Aeronautics and Space Administration, the greater of the simplified acquisition threshold or 5 percent of the total estimated cost of the contract; or

(ii) For a contract awarded by a civilian agency other than the Coast Guard and the National Aeronautics and Space Administration, either the simplified acquisition threshold or 5 percent of the total estimated cost of the contract.

(e) If the Contractor has an approved purchasing system, the Contractor nevertheless shall obtain the Contracting Officer's written consent before placing the following subcontracts:

_____
_____

(f)(1) The Contractor shall notify the Contracting Officer reasonably in advance of placing any subcontract or modification thereof for which consent is required under paragraph (c), (d), or (e) of this clause, including the following information:

(i) A description of the supplies or services to be subcontracted.

(ii) Identification of the type of subcontract to be used.

(iii) Identification of the proposed subcontractor.

(iv) The proposed subcontract price.

(v) The subcontractor's current, complete, and accurate cost or pricing data and Certificate of Current Cost or Pricing Data, if required by other contract provisions.

(vi) The subcontractor's Disclosure Statement or Certificate relating to Cost Accounting Standards when such data are required by other provisions of this contract.

(vii) A negotiation memorandum reflecting--

(A) The principal elements of the subcontract price negotiations;

(B) The most significant considerations controlling establishment of initial or revised prices;

(C) The reason cost or pricing data were or were not required;

(D) The extent, if any, to which the Contractor did not rely on the subcontractor's cost or pricing data in determining the price objective and in negotiating the final price;

(E) The extent to which it was recognized in the negotiation that the subcontractor's cost or pricing data were not accurate, complete, or current; the action taken by the Contractor and the subcontractor; and the effect of any such defective data on the total price negotiated;

(F) The reasons for any significant difference between the Contractor's price objective and the price negotiated; and

(G) A complete explanation of the incentive fee or profit plan when incentives are used. The explanation shall identify each critical performance element, management decisions used to quantify each incentive element, reasons for the incentives, and a summary of all trade-off possibilities considered.

(2) The Contractor is not required to notify the Contracting Officer in advance of entering into any subcontract for which consent is not required under paragraph (c), (d), or (e) of this clause.

(g) Unless the consent or approval specifically provides otherwise, neither consent by the Contracting Officer to any subcontract nor approval of the Contractor's purchasing system shall constitute a determination--

(1) Of the acceptability of any subcontract terms or conditions;

(2) Of the allowability of any cost under this contract; or

(3) To relieve the Contractor of any responsibility for performing this contract.

(h) No subcontract or modification thereof placed under this contract shall provide for payment on a cost-plus-a-percentage-of-cost basis, and any fee payable under cost-reimbursement type subcontracts shall not exceed the fee limitations in FAR 15.404-4(c)(4)(i).

(i) The Contractor shall give the Contracting Officer immediate written notice of any action or suit filed and prompt notice of any claim made against the Contractor by any subcontractor or vendor that, in the opinion of the Contractor, may result in litigation related in any way to this contract, with respect to which the Contractor may be entitled to reimbursement from the Government.

(j) The Government reserves the right to review the Contractor's purchasing system as set forth in FAR Subpart 44.3.

(k) Paragraphs (d) and (f) of this clause do not apply to the following subcontracts, which were evaluated during negotiations:

_____
_____

(End of clause)

52.245-2 GOVERNMENT PROPERTY (FIXED-PRICE CONTRACTS) (JUN 2003)

(a) Government-furnished property.

(1) Overseas contracts. If this contract is to be performed outside of the United States and its outlying areas, the words ``Government'' and ``Government-furnished'' (wherever they appear in this clause) shall be construed as ``United States Government'' and ``United States Government-furnished,'' respectively.

(2) The delivery or performance dates for this contract are based upon the expectation that Government-furnished property suitable for use (except for property furnished "as is") will be delivered to the Contractor at the times stated in the Schedule or, if not so stated, in sufficient time to enable the Contractor to meet the contract's delivery or performance dates.

(3) If Government-furnished property is received by the Contractor in a condition not suitable for the intended use, the Contractor shall, upon receipt of it, notify the Contracting Officer, detailing the facts, and, as directed by the Contracting Officer and at Government expense, either repair, modify, return, or otherwise dispose of the property. After completing the directed action and upon written request of the Contractor, the Contracting Officer shall make an equitable adjustment as provided in paragraph (h) of this clause.

(4) If Government-furnished property is not delivered to the Contractor by the required time, the Contracting Officer shall, upon the Contractor's timely written request, make a determination of the delay, if any, caused the Contractor and shall make an equitable adjustment in accordance with paragraph (h) of this clause.

(b) Changes in Government-furnished property. (1) The Contracting Officer may, by written notice, (i) decrease the Government-furnished property provided or to be provided under this contract, or (ii) substitute other Government-furnished property for the property to be provided by the Government, or to be acquired by the Contractor for the Government, under this contract. The Contractor shall promptly take such action as the Contracting Officer may direct regarding the removal, shipment, or disposal of the property covered by such notice.

(2) Upon the Contractor's written request, the Contracting Officer shall make an equitable adjustment to the contract in accordance with paragraph (h) of this clause, if the Government has agreed in the Schedule to make the property available for performing this contract and there is any--

(i) Decrease or substitution in this property pursuant to subparagraph (b)(1) of this clause; or

(ii) Withdrawal of authority to use this property, if provided under any other contract or lease.

(c) Title in Government property. (1) The Government shall retain title to all Government-furnished property.

(2) All Government-furnished property and all property acquired by the Contractor, title to which vests in the Government under this paragraph (collectively referred to as "Government property"), are subject to the provisions of this clause. However, special tooling accountable to this contract is subject to the provisions of the Special Tooling clause and is not subject to the provisions of this clause. Title to Government property shall not be affected by its incorporation into or attachment to any property not owned by the Government, nor shall Government property become a fixture or lose its identity as personal property by being attached to any real property.

(3) Title to each item of facilities and special test equipment acquired by the Contractor for the Government under this contract shall pass to and vest in the Government when its use in performing this contract commences or when the Government has paid for it, whichever is earlier, whether or not title previously vested in the Government.

(4) If this contract contains a provision directing the Contractor to purchase material for which the Government will reimburse the Contractor as a direct item of cost under this contract--

(i) Title to material purchased from a vendor shall pass to and vest in the Government upon the vendor's delivery of such material; and

(ii) Title to all other material shall pass to and vest in the Government upon--

(A) Issuance of the material for use in contract performance;

(B) Commencement of processing of the material or its use in contract performance; or

(C) Reimbursement of the cost of the material by the Government, whichever occurs first.

(d) Use of Government property. The Government property shall be used only for performing this contract, unless otherwise provided in this contract or approved by the Contracting Officer.

(e) Property administration. (1) The Contractor shall be responsible and accountable for all Government property provided under this contract and shall comply with Federal Acquisition Regulation (FAR) Subpart 45.5, as in effect on the date of this contract.

(2) The Contractor shall establish and maintain a program for the use, maintenance, repair, protection, and preservation of Government property in accordance with sound industrial practice and the applicable provisions of Subpart 45.5 of the FAR.

(3) If damage occurs to Government property, the risk of which has been assumed by the Government under this contract, the Government shall replace the items or the Contractor shall make such repairs as the Government directs. However, if the Contractor cannot effect such repairs within the time required, the Contractor shall dispose of the property as directed by the Contracting Officer. When any property for which the Government is responsible is replaced or repaired, the Contracting Officer shall make an equitable adjustment in accordance with paragraph (h) of this clause.

(4) The Contractor represents that the contract price does not include any amount for repairs or replacement for which the Government is responsible. Repair or replacement of property for which the Contractor is responsible shall be accomplished by the Contractor at its own expense.

(f) Access. The Government and all its designees shall have access at all reasonable times to the premises in which any Government property is located for the purpose of inspecting the Government property.

(g) Risk of loss. Unless otherwise provided in this contract, the Contractor assumes the risk of, and shall be responsible for, any loss or destruction of, or damage to, Government property upon its delivery to the Contractor or upon passage of title to the Government under paragraph (c) of this clause. However, the Contractor is not responsible for reasonable wear and tear to Government property or for Government property properly consumed in performing this contract.

(h) Equitable adjustment. When this clause specifies an equitable adjustment, it shall be made to any affected contract provision in accordance with the procedures of the Changes clause. When appropriate, the Contracting Officer may initiate an equitable adjustment in favor of the Government. The right to an equitable adjustment shall be the Contractor's exclusive remedy. The Government shall not be liable to suit for breach of contract for--

(1) Any delay in delivery of Government-furnished property;

(2) Delivery of Government-furnished property in a condition not suitable for its intended use;

(3) A decrease in or substitution of Government-furnished property; or

(4) Failure to repair or replace Government property for which the Government is responsible.

(i) Final accounting and disposition of Government property. Upon completing this contract, or at such earlier dates as may be fixed by the Contracting Officer, the Contractor shall submit, in a form acceptable to the Contracting Officer, inventory schedules covering all items of Government property (including any resulting scrap) not consumed in performing this contract or delivered to the Government. The Contractor shall prepare for shipment, deliver f.o.b. origin, or dispose of the Government property as may be directed or authorized by the Contracting Officer. The net proceeds of any such disposal shall be credited to the contract price or shall be paid to the Government as the Contracting Officer directs.

(j) Abandonment and restoration of Contractor's premises. Unless otherwise provided herein, the Government--

(1) May abandon any Government property in place, at which time all obligations of the Government regarding such abandoned property shall cease; and

(2) Has no obligation to restore or rehabilitate the Contractor's premises under any circumstances (e.g., abandonment, disposition upon completion of need, or upon contract completion). However, if the Government-furnished property (listed in the Schedule or specifications) is withdrawn or is unsuitable for the intended use, or if other Government property is substituted, then the equitable adjustment under paragraph (h) of this clause may properly include restoration or rehabilitation costs.

(k) Communications. All communications under this clause shall be in writing.

(l) Overseas contracts. If this contract is to be performed outside of the United States of America, its territories, or possessions, the words "Government" and "Government-furnished" (wherever they appear in this clause) shall be construed as "United States Government" and "United States Government-furnished," respectively.

(End of clause)

52.246-18 WARRANTY OF SUPPLIES OF A COMPLEX NATURE (MAY 2001) - ALTERNATE IV (APR 1984)

(a) Definitions. As used in this clause--

Acceptance, means the act of an authorized representative of the Government by which the Government assumes for itself, or as an agent of another, ownership of existing and identified supplies, or approves specific services rendered, as partial or complete performance of the contract.

Supplies, means the end items furnished by the Contractor and related services required under this contract. The word does not include "data."

(b) Contractor's obligations. (1) The Contractor warrants that for 365 calendar days after final acceptance all supplies furnished under this contract will be free from defects in material and workmanship and will conform with all requirements of this contract; provided, however, that with respect to Government-furnished property, the Contractor's warranty shall extend only to its proper installation, unless the Contractor performs some modification or other work on the property, in which case the Contractor's warranty shall extend to the modification or other work.

(2) Any supplies or parts thereof corrected or furnished in replacement shall be subject to the conditions of this clause to the same extent as supplies initially delivered. This warranty shall be equal in duration to that set forth in paragraph (b)(1) of this clause and shall run from the date of delivery of the corrected or replaced supplies.

(3) The Contractor shall not be obligated to correct or replace supplies if the facilities, tooling, drawings, or other equipment or supplies necessary to accomplish the correction or replacement have been made unavailable to the Contractor by action of the Government. In the event that correction or replacement has been directed, the Contractor shall promptly notify the Contracting Officer, in writing, of the nonavailability.

(4) The Contractor shall also prepare and furnish to the Government data and reports applicable to any correction required (including revision and updating of all affected data called for under this contract) at no increase in the contract price.

(5) When supplies are returned to the Contractor, the Contractor shall bear the transportation costs from the place of delivery specified in the contract (irrespective of the f.o.b. point or the point of acceptance) to the Contractor's plant and return.

(6) All implied warranties of merchantability and "fitness for a particular purpose" are excluded from any obligation contained in this contract.

(c) Remedies available to the Government. (1) In the event of a breach of the Contractor's warranty in paragraph (b)(1) of this clause, the Government may, at no increase in contract price--

(i) Require the Contractor, at the place of delivery specified in the contract (irrespective of the f.o.b. point or the point of acceptance) or at the Contractor's plant, to repair or replace, at the Contractor's election, defective or nonconforming supplies; or

(ii) Require the Contractor to furnish at the Contractor's plant the materials or parts and installation instructions required to successfully accomplish the correction.

(2) If the Contracting Officer does not require correction or replacement of defective or nonconforming supplies or the Contractor is not obligated to correct or replace under paragraph (b)(3) of this clause, the Government shall be entitled to an equitable reduction in the contract price.

(3) The Contracting Officer shall notify the Contractor in writing of any breach of the warranty in paragraph (b) of this clause within 14 calendar days after discovery of the defect The Contractor shall submit to the Contracting Officer a written recommendation within 7 calendar days as to the corrective action required to remedy the breach. After the notice of breach, but not later than 10 calendar days after receipt of the Contractor's recommendation for corrective action, the Contracting Officer may, in writing, direct correction or replacement as in paragraph (c)(1) of this clause, and the Contractor shall, notwithstanding any disagreement regarding the existence of a breach of warranty, comply with this direction. If it is later determined that the Contractor did not breach the warranty in paragraph (b)(1) of this clause, the contract price will be equitably adjusted.

(4) If supplies are corrected or replaced, the period for notification of a breach of the Contractor's warranty in paragraph (c)(3) of this clause shall be 365 calendar days from the furnishing or return by the Contractor to the Government of the corrected or replaced supplies or parts thereof, or, if correction or replacement is effected by the Contractor at a Government or other activity, for 365 calendar days thereafter.

(5) The rights and remedies of the Government provided in this clause are in addition to and do not limit any rights afforded to the Government by any other clause of the contract.

(6) The Contractor shall be liable for the reasonable costs of disassembly and/or reassembly of larger items when it is necessary to remove the supplies to be inspected and/or returned for correction or replacement.

52.246-24 LIMITATION OF LIABILITY--HIGH-VALUE ITEMS (FEB 1997)

(a) Except as provided in paragraphs (b) through (e) below, and notwithstanding any other provision of this contract, the Contractor shall not be liable for loss of or damage to property of the Government (including the supplies

delivered under this contract) that (1) occurs after Government acceptance of the supplies delivered under this contract, and (2) results from any defects or deficiencies in the supplies.

(b) The limitation of liability under paragraph (a) above shall not apply when a defect or deficiency in, or the Government's acceptance of, the supplies results from willful misconduct or lack of good faith on the part of any of the Contractor's managerial personnel. The term "Contractor's managerial personnel," as used in this clause, means the Contractor's directors, officers, and any of the Contractor's managers, superintendents, or equivalent representatives wb ho have supervision or direction of--

(1) All or substantially all of the Contractor's business;

(2) All or substantially all of the Contractor's operations at any one plant, laboratory, or separate location at which the contract is being performed; or

(3) A separate and complete major industrial operation connected with the performance of this contract.

(c) If the Contractor carries insurance, or has established a reserve for self-insurance, covering liability for loss or damage suffered by the Government through purchase or use of the supplies required to be delivered under this contract, the Contractor shall be liable to the Government, to the extent of such insurance or reserve, for loss of or damage to property of the Government occurring after Government acceptance of, and resulting from any defects or deficiencies in, the supplies delivered under this contract.

(d)(1) This clause does not diminish the Contractor's obligations, to the extent that they arise otherwise under this contract, relating to correction, repair, replacement, or other relief for any defect or deficiency in supplies delivered under this contract.

(2) Unless this is a cost-reimbursement contract, if loss or damage occurs and correction, repair, or replacement is not feasible or desired by the Government, the Contractor shall, as determined by the Contracting Officer--

(i) Pay the Government the amount it would have cost the Contractor to make correction, repair, or replacement before the loss or damage occurred; (ii) Provide other equitable relief.

(e) This clause shall not limit or otherwise affect the Government's rights under clauses, if included in this contract, that cover--

(1) Warranty of technical data;

(2) Ground and flight risks or aircraft flight risks; or

(3) Government property.

(End of clause)

52.248-1 VALUE ENGINEERING (FEB 2000)

(a) General. The Contractor is encouraged to develop, prepare, and submit value engineering change proposals (VECP's) voluntarily. The Contractor shall share in any net acquisition savings realized from accepted VECP's, in accordance with the incentive sharing rates in paragraph (f) below.

(b) Definitions. "Acquisition savings," as used in this clause, means savings resulting from the application of a VECP to contracts awarded by the same contracting office or its successor for essentially the same unit. Acquisition savings include--

(1) Instant contract savings, which are the net cost reductions on this, the instant contract, and which are equal to the instant unit cost reduction multiplied by the number of instant contract units affected by the VECP, less the Contractor's allowable development and implementation costs;

(2) Concurrent contract savings, which are net reductions in the prices of other contracts that are definitized and ongoing at the time the VECP is accepted; and

(3) Future contract savings, which are the product of the future unit cost reduction multiplied by the number of future contract units in the sharing base. On an instant contract, future contract savings include savings on increases in quantities after VECP acceptance that are due to contract modifications, exercise of options, additional orders, and funding of subsequent year requirements on a multiyear contract.

"Collateral costs," as used in this clause, means agency cost of operation, maintenance, logistic support, or Government-furnished property.

"Collateral savings," as used in this clause, means those measurable net reductions resulting from a VECP in the agency's overall projected collateral costs, exclusive of acquisition savings, whether or not the acquisition cost changes.

"Contracting office" includes any contracting office that the acquisition is transferred to, such as another branch of the agency or another agency's office that is performing a joint acquisition action.

"Contractor's development and implementation costs," as used in this clause, means those costs the Contractor incurs on a VECP specifically in developing, testing, preparing, and submitting the VECP, as well as those costs the Contractor incurs to make the contractual changes required by Government acceptance of a VECP.

"Future unit cost reduction," as used in this clause, means the instant unit cost reduction adjusted as the Contracting Officer considers necessary for projected learning or changes in quantity during the sharing period. It is calculated at the time the VECP is accepted and applies either (1) throughout the sharing period, unless the Contracting Officer decides that recalculation is necessary because conditions are significantly different from those previously anticipated or (2) to the calculation of a lump-sum payment, which cannot later be revised.

"Government costs," as used in this clause, means those agency costs that result directly from developing and implementing the VECP, such as any net increases in the cost of testing, operations, maintenance, and logistics support. The term does not include the normal administrative costs of processing the VECP or any increase in this contract's cost or price resulting from negative instant contract savings.

"Instant contract," as used in this clause, means this contract, under which the VECP is submitted. It does not include increases in quantities after acceptance of the VECP that are due to contract modifications, exercise of options, or additional orders. If this is a multiyear contract, the term does not include quantities funded after VECP acceptance. If this contract is a fixed-price contract with prospective price redetermination, the term refers to the period for which firm prices have been established.

"Instant unit cost reduction" means the amount of the decrease in unit cost of performance (without deducting any Contractor's development or implementation costs) resulting from using the VECP on this, the instant contract. If this is a service contract, the instant unit cost reduction is normally equal to the number of hours per line-item task saved by using the VECP on this contract, multiplied by the appropriate contract labor rate.

"Negative instant contract savings" means the increase in the cost or price of this contract when the acceptance of a VECP results in an excess of the Contractor's allowable development and implementation costs over the product of the instant unit cost reduction multiplied by the number of instant contract units affected.

"Net acquisition savings" means total acquisition savings, including instant, concurrent, and future contract savings, less Government costs.

"Sharing base," as used in this clause, means the number of affected end items on contracts of the contracting office accepting the VECP.

Sharing period, as used in this clause, means the period beginning with acceptance of the first unit incorporating the VECP and ending at a calendar date or event determined by the contracting officer for each VECP.

"Unit," as used in this clause, means the item or task to which the Contracting Officer and the Contractor agree the VECP applies.

"Value engineering change proposal (VECP)" means a proposal that--

(1) Requires a change to this, the instant contract, to implement; and

(2) Results in reducing the overall projected cost to the agency without impairing essential functions or characteristics; provided, that it does not involve a change--

(i) In deliverable end item quantities only;

(ii) In research and development (R&D) end items or R&D test quantities that is due solely to results of previous testing under this contract; or

(iii) To the contract type only.

(c) VECP preparation. As a minimum, the Contractor shall include in each VECP the information described in subparagraphs (1) through (8) below. If the proposed change is affected by contractually required configuration management or similar procedures, the instructions in those procedures relating to format, identification, and priority assignment shall govern VECP preparation. The VECP shall include the following:

(1) A description of the difference between the existing contract requirement and the proposed requirement, the comparative advantages and disadvantages of each, a justification when an item's function or characteristics are being altered, the effect of the change on the end item's performance, and any pertinent objective test data.

(2) A list and analysis of the contract requirements that must be changed if the VECP is accepted, including any suggested specification revisions.

(3) Identification of the unit to which the VECP applies.

(4) A separate, detailed cost estimate for (i) the affected portions of the existing contract requirement and (ii) the VECP. The cost reduction associated with the VECP shall take into account the Contractor's allowable development and implementation costs, including any amount attributable to subcontracts under the Subcontracts paragraph of this clause, below.

(5) A description and estimate of costs the Government may incur in implementing the VECP, such as test and evaluation and operating and support costs.

(6) A prediction of any effects the proposed change would have on collateral costs to the agency.

(7) A statement of the time by which a contract modification accepting the VECP must be issued in order to achieve the maximum cost reduction, noting any effect on the contract completion time or delivery schedule.

(8) Identification of any previous submissions of the VECP, including the dates submitted, the agencies and contract numbers involved, and previous Government actions, if known.

(d) Submission. The Contractor shall submit VECP's to the Contracting Officer, unless this contract states otherwise. If this contract is administered by other than the contracting office, the Contractor shall submit a copy of the VECP simultaneously to the Contracting Officer and to the Administrative Contracting Officer.

(e) Government action. (1) The Contracting Officer will notify the Contractor of the status of the VECP within 45 calendar days after the contracting office receives it. If additional time is required, the Contracting Officer will notify the Contractor within the 45-day period and provide the reason for the delay and the expected date of the decision. The Government will process VECP's expeditiously; however, it shall not be liable for any delay in acting upon a VECP.

(2) If the VECP is not accepted, the Contracting Officer will notify the Contractor in writing, explaining the reasons for rejection. The Contractor may withdraw any VECP, in whole or in part, at any time before it is accepted by the Government. The Contracting Officer may require that the Contractor provide written notification before undertaking significant expenditures for VECP effort.

(3) Any VECP may be accepted, in whole or in part, by the Contracting Officer's award of a modification to this contract citing this clause and made either before or within a reasonable time after contract performance is completed. Until such a contract modification applies a VECP to this contract, the Contractor shall perform in accordance with the existing contract. The decision to accept or reject all or part of any VECP is a unilateral decision made solely at the discretion of the Contracting Officer.

(f) Sharing rates. If a VECP is accepted, the Contractor shall share in net acquisition savings according to the percentages shown in the table below. The percentage paid the Contractor depends upon (1) this contract's type (fixed-price, incentive, or cost-reimbursement), (2) the sharing arrangement specified in paragraph (a) above (incentive, program requirement, or a combination as delineated in the Schedule), and (3) the source of the savings (the instant contract, or concurrent and future contracts), as follows:

CONTRACTOR'S SHARE OF NET ACQUISITION SAVINGS

(Figures in percent)

Contract Type	Incentive (Voluntary)		Program Requirement (Mandatory)	
	Instant Contract Rate	Concurrent and Future Contract Rate	Instant Contract Rate	Concurrent and Future Contract Rate
Fixed-price (includes fixed-price-award-fee; excludes other fixed-price incentive contracts)	(1) 50	(1) 50	(1) 25	25
Incentive (fixed-price or cost) (other than award fee)	(2)	(1) 50	(1) 50	25
Cost-reimbursement (includes cost-plus-award-fee; excludes other cost-type incentive Contracts)	(3) 25	(3)	15	15

(1) The Contracting Officer may increase the Contractor's sharing rate to as high as 75 percent for each VECP.
(2) Same sharing arrangement as the contract's profit or fee adjustment formula.
(3) The Contracting Officer may increase the Contractor's sharing rate to as high as 50 percent for each VECP.

(g) Calculating net acquisition savings.

(1) Acquisition savings are realized when (i) the cost or price is reduced on the instant contract, (ii) reductions are negotiated in concurrent contracts, (iii) future contracts are awarded, or (iv) agreement is reached on a lump-sum payment for future contract savings (see subparagraph (i)(4) below). Net acquisition savings are first realized, and the Contractor shall be paid a share, when Government costs and any negative instant contract savings have been fully offset against acquisition savings.

(2) Except in incentive contracts, Government costs and any price or cost increases resulting from negative instant contract savings shall be offset against acquisition savings each time such savings are realized until they are fully offset. Then, the Contractor's share is calculated by multiplying net acquisition savings by the appropriate Contractor's percentage sharing rate (see paragraph (f) above). Additional Contractor shares of net acquisition savings shall be paid to the Contractor at the time realized.

(3) If this is an incentive contract, recovery of Government costs on the instant contract shall be deferred and offset against concurrent and future contract savings. The Contractor shall share through the contract incentive structure in savings on the instant contract items affected. Any negative instant contract savings shall be added to the target cost or to the target price and ceiling price, and the amount shall be offset against concurrent and future contract savings.

(4) If the Government does not receive and accept all items on which it paid the Contractor's share, the Contractor shall reimburse the Government for the proportionate share of these payments.

(h) Contract adjustment. The modification accepting the VECP (or a subsequent modification issued as soon as possible after any negotiations are completed) shall--

(1) Reduce the contract price or estimated cost by the amount of instant contract savings, unless this is an incentive contract;

(2) When the amount of instant contract savings is negative, increase the contract price, target price and ceiling price, target cost, or estimated cost by that amount;

(3) Specify the Contractor's dollar share per unit on future contracts, or provide the lump-sum payment;

(4) Specify the amount of any Government costs or negative instant contract savings to be offset in determining net acquisition savings realized from concurrent or future contract savings; and

(5) Provide the Contractor's share of any net acquisition savings under the instant contract in accordance with the following:

(i) Fixed-price contracts--add to contract price.

(ii) Cost-reimbursement contracts--add to contract fee.

(i) Concurrent and future contract savings.

(1) Payments of the Contractor's share of concurrent and future contract savings shall be made by a modification to the instant contract in accordance with subparagraph (h)(5) above. For incentive contracts, shares shall be added as a separate firm-fixed-price line item on the instant contract. The Contractor shall maintain records adequate to identify the first delivered unit for 3 years after final payment under this contract.

(2) The Contracting Officer shall calculate the Contractor's share of concurrent contract savings by (i) subtracting from the reduction in price negotiated on the concurrent contract any Government costs or negative instant contract savings not yet offset and (ii) multiplying the result by the Contractor's sharing rate.

(3) The Contracting Officer shall calculate the Contractor's share of future contract savings by (i) multiplying the future unit cost reduction by the number of future contract units scheduled for delivery during the sharing period, (ii)

subtracting any Government costs or negative instant contract savings not yet offset, and (iii) multiplying the result by the Contractor's sharing rate.

(4) When the Government wishes and the Contractor agrees, the Contractor's share of future contract savings may be paid in a single lump sum rather than in a series of payments over time as future contracts are awarded. Under this alternate procedure, the future contract savings may be calculated when the VECP is accepted, on the basis of the Contracting Officer's forecast of the number of units that will be delivered during the sharing period. The Contractor's share shall be included in a modification to this contract (see subparagraph (h)(3) above) and shall not be subject to subsequent adjustment.

(5) Alternate no-cost settlement method. When, in accordance with subsection 48.104-4 of the Federal Acquisition Regulation, the Government and the Contractor mutually agree to use the no-cost settlement method, the following applies:

(i) The Contractor will keep all the savings on the instant contract and on its concurrent contracts only.

(ii) The Government will keep all the savings resulting from concurrent contracts placed on other sources, savings from all future contracts, and all collateral savings.

(j) Collateral savings. If a VECP is accepted, the Contracting Officer will increase the instant contract amount, as specified in paragraph (h)(5) of this clause, by a rate from 20 to 100 percent, as determined by the Contracting Officer, of any projected collateral savings determined to be realized in a typical year of use after subtracting any Government costs not previously offset. However, the Contractor's share of collateral savings will not exceed the contract's firm-fixed-price, target price, target cost, or estimated cost, at the time the VECP is accepted, or $100,000, whichever is greater. The Contracting Officer will be the sole determiner of the amount of collateral savings.

(k) Relationship to other incentives. Only those benefits of an accepted VECP not rewardable under performance, design-to-cost (production unit cost, operating and support costs, reliability and maintainability), or similar incentives shall be rewarded under this clause. However, the targets of such incentives affected by the VECP shall not be adjusted because of VECP acceptance. If this contract specifies targets but provides no incentive to surpass them, the value engineering sharing shall apply only to the amount of achievement better than target.

(l) Subcontracts. The Contractor shall include an appropriate value engineering clause in any subcontract of $100,000 or more and may include one in subcontracts of lesser value. In calculating any adjustment in this contract's price for instant contract savings (or negative instant contract savings), the Contractor's allowable development and implementation costs shall include any subcontractor's allowable development and implementation costs, and any value engineering incentive payments to a subcontractor, clearly resulting from a VECP accepted by the Government under this contract. The Contractor may choose any arrangement for subcontractor value engineering incentive payments; provided, that the payments shall not reduce the Government's share of concurrent or future contract savings or collateral savings.

(m) Data. The Contractor may restrict the Government's right to use any part of a VECP or the supporting data by marking the following legend on the affected parts:

"These data, furnished under the Value Engineering clause of contract . . . . . , shall not be disclosed outside the Government or duplicated, used, or disclosed, in whole or in part, for any purpose other than to evaluate a value engineering change proposal submitted under the clause. This restriction does not limit the Government's right to use information contained in these data if it has been obtained or is otherwise available from the Contractor or from another source without limitations."

If a VECP is accepted, the Contractor hereby grants the Government unlimited rights in the VECP and supporting data, except that, with respect to data qualifying and submitted as limited rights technical data, the Government shall have the rights specified in the contract modification implementing the VECP and shall appropriately mark the data. (The terms "unlimited rights" and "limited rights" are defined in Part 27 of the Federal Acquisition Regulation.)

(End of clause)

52.249-2 TERMINATION FOR CONVENIENCE OF THE GOVERNMENT (FIXED-PRICE) (SEP 1996)

(a) The Government may terminate performance of work under this contract in whole or, from time to time, in part if the Contracting Officer determines that a termination is in the Government's interest. The Contracting Officer shall terminate by delivering to the Contractor a Notice of Termination specifying the extent of termination and the effective date.

(b) After receipt of a Notice of Termination, and except as directed by the Contracting Officer, the Contractor shall immediately proceed with the following obligations, regardless of any delay in determining or adjusting any amounts due under this clause:

(1) Stop work as specified in the notice.

(2) Place no further subcontracts or orders (referred to as subcontracts in this clause) for materials, services, or facilities, except as necessary to complete the continued portion of the contract.

(3) Terminate all subcontracts to the extent they relate to the work terminated.

(4) Assign to the Government, as directed by the Contracting Officer, all right, title, and interest of the Contractor under the subcontracts terminated, in which case the Government shall have the right to settle or to pay any termination settlement proposal arising out of those terminations.

(5) With approval or ratification to the extent required by the Contracting Officer, settle all outstanding liabilities and termination settlement proposals arising from the termination of subcontracts; the approval or ratification will be final for purposes of this clause.

(6) As directed by the Contracting Officer, transfer title and deliver to the Government (i) the fabricated or unfabricated parts, work in process, completed work, supplies, and other material produced or acquired for the work terminated, and (ii) the completed or partially completed plans, drawings, information, and other property that, if the contract had been completed, would be required to be furnished to the Government.

(7) Complete performance of the work not terminated.

(8) Take any action that may be necessary, or that the Contracting Officer may direct, for the protection and preservation of the property related to this contract that is in the possession of the Contractor and in which the Government has or may acquire an interest.

(9) Use its best efforts to sell, as directed or authorized by the Contracting Officer, any property of the types referred to in subparagraph (b)(6) of this clause; provided, however, that the Contractor (i) is not required to extend credit to any purchaser and (ii) may acquire the property under the conditions prescribed by, and at prices approved by, the Contracting Officer. The proceeds of any transfer or disposition will be applied to reduce any payments to be made by the Government under this contract, credited to the price or cost of the work, or paid in any other manner directed by the Contracting Officer.

(c) The Contractor shall submit complete termination inventory schedules no later than 120 days from the effective date of termination, unless extended in writing by the Contracting Officer upon written request of the Contractor within this 120-day period.

(d) After expiration of the plant clearance period as defined in Subpart 45.6 of the Federal Acquisition Regulation, the Contractor may submit to the Contracting Officer a list, certified as to quantity and quality, of termination inventory not previously disposed of, excluding items authorized for disposition by the Contracting Officer. The Contractor may request the Government to remove those items or enter into an agreement for their storage. Within 15 days, the Government will accept title to those items and remove them or enter into a storage agreement. The

Contracting Officer may verify the list upon removal of the items, or if stored, within 45 days from submission of the list, and shall correct the list, as necessary, before final settlement.

(e) After termination, the Contractor shall submit a final termination settlement proposal to the Contracting Officer in the form and with the certification prescribed by the Contracting Officer. The Contractor shall submit the proposal promptly, but no later than 1 year from the effective date of termination, unless extended in writing by the Contracting Officer upon written request of the Contractor within this 1-year period. However, if the Contracting Officer determines that the facts justify it, a termination settlement proposal may be received and acted on after 1 year or any extension. If the Contractor fails to submit the proposal within the time allowed, the Contracting Officer may determine, on the basis of information available, the amount, if any, due the Contractor because of the termination and shall pay the amount determined.

(f) Subject to paragraph (e) of this clause, the Contractor and the Contracting Officer may agree upon the whole or any part of the amount to be paid or remaining to be paid because of the termination. The amount may include a reasonable allowance for profit on work done. However, the agreed amount, whether under this paragraph (g) or paragraph (g) of this clause, exclusive of costs shown in subparagraph (g)(3) of this clause, may not exceed the total contract price as reduced by (1) the amount of payments previously made and (2) the contract price of work not terminated. The contract shall be modified, and the Contractor paid the agreed amount. Paragraph (g) of this clause shall not limit, restrict, or affect the amount that may be agreed upon to be paid under this paragraph.

(g) If the Contractor and the Contracting Officer fail to agree on the whole amount to be paid because of the termination of work, the Contracting Officer shall pay the Contractor the amounts determined by the Contracting Officer as follows, but without duplication of any amounts agreed on under paragraph (f) of this clause:

(1) The contract price for completed supplies or services accepted by the Government (or sold or acquired under subparagraph (b)(9) of this clause) not previously paid for, adjusted for any saving of freight and other charges.

(2) The total of--

(i) The costs incurred in the performance of the work terminated, including initial costs and preparatory expense allocable thereto, but excluding any costs attributable to supplies or services paid or to be paid under subparagraph (f)(1) of this clause;

(ii) The cost of settling and paying termination settlement proposals under terminated subcontracts that are properly chargeable to the terminated portion of the contract if not included in subdivision (g)(2)(i) of this clause; and

(iii) A sum, as profit on subdivision (g)(2)(i) of this clause, determined by the Contracting Officer under 49.202 of the Federal Acquisition Regulation, in effect on the date of this contract, to be fair and reasonable; however, if it appears that the Contractor would have sustained a loss on the entire contract had it been completed, the Contracting Officer shall allow no profit under this subdivision (iii) and shall reduce the settlement to reflect the indicated rate of loss.

(3) The reasonable costs of settlement of the work terminated, including--

(i) Accounting, legal, clerical, and other expenses reasonably necessary for the preparation of termination settlement proposals and supporting data;

(ii) The termination and settlement of subcontracts (excluding the amounts of such settlements); and

(iii) Storage, transportation, and other costs incurred, reasonably necessary for the preservation, protection, or disposition of the termination inventory.

(h) Except for normal spoilage, and except to the extent that the Government expressly assumed the risk of loss, the Contracting Officer shall exclude from the amounts payable to the Contractor under paragraph (g) of this clause, the fair value, as determined by the Contracting Officer, of property that is destroyed, lost, stolen, or damaged so as to become undeliverable to the Government or to a buyer.

(i) The cost principles and procedures of Part 31 of the Federal Acquisition Regulation, in effect on the date of this contract, shall govern all costs claimed, agreed to, or determined under this clause.

(j) The Contractor shall have the right of appeal, under the Disputes clause, from any determination made by the Contracting Officer under paragraph (e), (g), or (l) of this clause, except that if the Contractor failed to submit the termination settlement proposal or request for equitable adjustment within the time provided in paragraph (e) or (l), respectively, and failed to request a time extension, there is no right of appeal.

(k) In arriving at the amount due the Contractor under this clause, there shall be deducted--

(1) All unliquidated advance or other payments to the Contractor under the terminated portion of this contract;

(2) Any claim which the Government has against the Contractor under this contract; and

(3) The agreed price for, or the proceeds of sale of, materials, supplies, or other things acquired by the Contractor or sold under the provisions of this clause and not recovered by or credited to the Government.

(l) If the termination is partial, the Contractor may file a proposal with the Contracting Officer for an equitable adjustment of the price(s) of the continued portion of the contract. The Contracting Officer shall make any equitable adjustment agreed upon. Any proposal by the Contractor for an equitable adjustment under this clause shall be requested within 90 days from the effective date of termination unless extended in writing by the Contracting Officer.

(m)(1) The Government may, under the terms and conditions it prescribes, make partial payments and payments against costs incurred by the Contractor for the terminated portion of the contract, if the Contracting Officer believes the total of these payments will not exceed the amount to which the Contractor will be entitled.

(2) If the total payments exceed the amount finally determined to be due, the Contractor shall repay the excess to the Government upon demand, together with interest computed at the rate established by the Secretary of the Treasury under 50 U.S.C. App. 1215(b)(2). Interest shall be computed for the period from the date the excess payment is received by the Contractor to the date the excess is repaid. Interest shall not be charged on any excess payment due to a reduction in the Contractor's termination settlement proposal because of retention or other disposition of termination inventory until 10 days after the date of the retention or disposition, or a later date determined by the Contracting Officer because of the circumstances.

(n) Unless otherwise provided in this contract or by statute, the Contractor shall maintain all records and documents relating to the terminated portion of this contract for 3 years after final settlement. This includes all books and other evidence bearing on the Contractor's costs and expenses under this contract. The Contractor shall make these records and documents available to the Government, at the Contractor's office, at all reasonable times, without any direct charge. If approved by the Contracting Officer, photographs, microphotographs, or other authentic reproductions may be maintained instead of original records and documents.

(End of clause)

52.249-8 DEFAULT (FIXED-PRICE SUPPLY AND SERVICE) (APR 1984)

(a)(1) The Government may, subject to paragraphs (c) and (d) of this clause, by written notice of default to the Contractor, terminate this contract in whole or in part if the Contractor fails to--

(i) Deliver the supplies or to perform the services within the time specified in this contract or any extension;

(ii) Make progress, so as to endanger performance of this contract (but see subparagraph (a)(2) of this clause); or

(iii) Perform any of the other provisions of this contract (but see subparagraph (a)(2) below).

(2) The Government's right to terminate this contract under subdivisions (a)(1)(ii) and (1)(iii) of this clause, may be exercised if the Contractor does not cure such failure within 10 days (or more if authorized in writing by the Contracting Officer) after receipt of the notice from the Contracting Officer specifying the failure.

(b) If the Government terminates this contract in whole or in part, it may acquire, under the terms and in the manner the Contracting Officer considers appropriate, supplies or services similar to those terminated, and the Contractor will be liable to the Government for any excess costs for those supplies or services. However, the Contractor shall continue the work not terminated.

(c) Except for defaults of subcontractors at any tier, the Contractor shall not be liable for any excess costs if the failure to perform the contract arises from causes beyond the control and without the fault or negligence of the Contractor. Examples of such causes include (1) acts of God or of the public enemy, (2) acts of the Government in either its sovereign or contractual capacity, (3) fires, (4) floods, (5) epidemics, (6) quarantine restrictions, (7) strikes, (8) freight embargoes, and (9) unusually severe weather. In each instance the failure to perform must be beyond the control and without the fault or negligence of the Contractor.

(d) If the failure to perform is caused by the default of a subcontractor at any tier, and if the cause of the default is beyond the control of both the Contractor and subcontractor, and without the fault or negligence of either, the Contractor shall not be liable for any excess costs for failure to perform, unless the subcontracted supplies or services were obtainable from other sources in sufficient time for the Contractor to meet the required delivery schedule.

(e) If this contract is terminated for default, the Government may require the Contractor to transfer title and deliver to the Government, as directed by the Contracting Officer, any (1) completed supplies, and (2) partially completed supplies and materials, parts, tools, dies, jigs, fixtures, plans, drawings, information, and contract rights (collectively referred to as "manufacturing materials" in this clause) that the Contractor has specifically produced or acquired for the terminated portion of this contract. Upon direction of the Contracting Officer, the Contractor shall also protect and preserve property in its possession in which the Government has an interest.

(f) The Government shall pay contract price for completed supplies delivered and accepted. The Contractor and Contracting Officer shall agree on the amount of payment for manufacturing materials delivered and accepted and for the protection and preservation of the property. Failure to agree will be a dispute under the Disputes clause. The Government may withhold from these amounts any sum the Contracting Officer determines to be necessary to protect the Government against loss because of outstanding liens or claims of former lien holders.

(g) If, after termination, it is determined that the Contractor was not in default, or that the default was excusable, the rights and obligations of the parties shall be the same as if the termination had been issued for the convenience of the Government.

(h) The rights and remedies of the Government in this clause are in addition to any other rights and remedies provided by law or under this contract.

(End of clause)

52.253-1 COMPUTER GENERATED FORMS (JAN 1991)

(a) Any data required to be submitted on a Standard or Optional Form prescribed by the Federal Acquisition Regulation (FAR) may be submitted on a computer generated version of the form, provided there is no change to the name, content, or sequence of the data elements on the form, and provided the form carries the Standard or Optional Form number and edition date.

(b) Unless prohibited by agency regulations, any data required to be submitted on an agency unique form prescribed by an agency supplement to the FAR may be submitted on a computer generated version of the form provided there is no change to the name, content, or sequence of the data elements on the form and provided the form carries the agency form number and edition date.

(b) If the Contractor submits a computer generated version of a form that is different than the required form, then the rights and obligations of the parties will be determined based on the content of the required form.

(End of clause)

252.201-7000 CONTRACTING OFFICER'S REPRESENTATIVE (DEC 1991)

(a) "Definition. Contracting officer's representative" means an individual designated in accordance with subsection 201.602-2 of the Defense Federal Acquisition Regulation Supplement and authorized in writing by the contracting officer to perform specific technical or administrative functions.

(b) If the Contracting Officer designates a contracting officer's representative (COR), the Contractor will receive a copy of the written designation. It will specify the extent of the COR's authority to act on behalf of the contracting officer. The COR is not authorized to make any commitments or changes that will affect price, quality, quantity, delivery, or any other term or condition of the contract.

(End of clause)

252.203-7001 PROHIBITION ON PERSONS CONVICTED OF FRAUD OR OTHER DEFENSE-CONTRACT-RELATED FELONIES (MAR 1999)

(a) Definitions. As used in this clause—

(1) “Arising out of a contract with the DoD” means any act in connection with—

(i) Attempting to obtain;

(ii) Obtaining, or

(iii) Performing a contract or first-tier subcontract of any agency, department, or component of the Department of Defense (DoD).

(2) “Conviction of fraud or any other felony” means any conviction for fraud or a felony in violation of state or Federal criminal statutes, whether entered on a verdict or plea, including a plea of *nolo contendere*, for which sentence has been imposed.

(3) “Date of conviction” means the date judgment was entered against the individual.

(b) Any individual who is convicted after September 29, 1988, of fraud or any other felony arising out of a contract with the DoD is prohibited from serving--

(1) In a management or supervisory capacity on any DoD contract or first-tier subcontract;

(2) On the board of directors of any DoD contractor or first-tier subcontractor;

(3) As a consultant, agent, or representative for any DoD contractor or first-tier subcontractor; or

(4) In any other capacity with the authority to influence, advise, or control the decisions of any DoD contractor or subcontractor with regard to any DoD contract or first-tier subcontract.

(c) Unless waived, the prohibition in paragraph (b) of this clause applies for not less than 5 years from the date of conviction.

(d) 10 U.S.C. 2408 provides that a defense contractor or first-tier subcontractor shall be subject to a criminal penalty of not more than $500,000 if convicted of knowingly—

(1) Employing a person under a prohibition specified in paragraph (b) of this clause; or

(2) Allowing such a person to serve on the board of directors of the contractor or first-tier subcontractor.

(e) In addition to the criminal penalties contained in 10 U.S.C. 2408, the Government may consider other available remedies, such as—

(1) Suspension or debarment;

(2) Cancellation of the contract at no cost to the Government; or

(3) Termination of the contract for default.

(f) The Contractor may submit written requests for waiver of the prohibition in paragraph (b) of this clause to the Contracting Officer. Requests shall clearly identify—

(1) The person involved;

(2) The nature of the conviction and resultant sentence or punishment imposed;

(3) The reasons for the requested waiver; and

(4) An explanation of why a waiver is in the interest of national security.

(g) The Contractor agrees to include the substance of this clause, appropriately modified to reflect the identity and relationship of the parties, in all first-tier subcontracts exceeding the simplified acquisition threshold in Part 2 of the Federal Acquisition Regulation, except those for commercial items or components.

(h) Pursuant to 10 U.S.C. 2408(c), defense contractors and subcontractors may obtain information as to whether a particular person has been convicted of fraud or any other felony arising out of a contract with the DoD by contacting The Office of Justice Programs, The Denial of Federal Benefits Office, U.S. Department of Justice, telephone (202) 616-3507.

(End of clause)

252.203-7002 DISPLAY OF DOD HOTLINE POSTER (DEC 1991)

(a) The Contractor shall display prominently in common work areas within business segments performing work under Department of Defense (DoD) contracts, DoD Hotline Posters prepared by the DoD Office of the Inspector General.

(b) DoD Hotline Posters may be obtained from the DoD Inspector General, ATTN: Defense Hotline, 400 Army Navy Drive, Washington, DC 22202-2884.

(c) The Contractor need not comply with paragraph (a) of this clause if it has established a mechanism, such as a

hotline, by which employees may report suspected instances of improper conduct, and instructions that encourage employees to make such reports.

(End of clause)

252.204-7000 DISCLOSURE OF INFORMATION (DEC 1991)

(a) The Contractor shall not release to anyone outside the Contractor's organization any unclassified information, regardless of medium (e.g., film, tape, document), pertaining to any part of this contract or any program related to this contract, unless--

(1) The Contracting Officer has given prior written approval; or

(2) The information is otherwise in the public domain before the date of release.

(b) Requests for approval shall identify the specific information to be released, the medium to be used, and the purpose for the release. The Contractor shall submit its request to the Contracting Officer at least 45 days before the proposed date for release.

(c) The Contractor agrees to include a similar requirement in each subcontract under this contract. Subcontractors shall submit requests for authorization to release through the prime contractor to the Contracting Officer.

(End of clause)

252.204-7003 CONTROL OF GOVERNMENT PERSONNEL WORK PRODUCT (APR 1992)

The Contractor's procedures for protecting against unauthorized disclosure of information shall not require Department of Defense employees or members of the Armed Forces to relinquish control of their work products, whether classified or not, to the contractor.

(End of clause)

252.204-7004 REQUIRED CENTRAL CONTRACTOR REGISTRATION ALTERNATE A (NOV 2003)

(a) Definitions. As used in this clause--

“Central Contractor Registration (CCR) database” means the primary Government repository for contractor information required for the conduct of business with the Government.

“Commercial and Government Entity (CAGE) code” means--

(1) A code assigned by the Defense Logistics Information Service (DLIS) to identify a commercial or Government entity; or

(2) A code assigned by a member of the North Atlantic Treaty Organization that DLIS records and maintains in the CAGE master file. This type of code is known as an “NCAGE code.”

“Data Universal Numbering System (DUNS) number” means the 9-digit number assigned by Dun and Bradstreet, Inc. (D&B) to identify unique business entities.

“Data Universal Numbering System +4 (DUNS+4) number” means the DUNS number assigned by D&B plus a 4-character suffix that may be assigned by a business concern. (D&B has no affiliation with this 4-character suffix.) This 4-character suffix may be assigned at the discretion of the business concern to establish additional CCR records

for identifying alternative Electronic Funds Transfer (EFT) accounts (see Subpart 32.11 of the Federal Acquisition Regulation) for the same parent concern.

“Registered in the CCR database” means that--

(1) The Contractor has entered all mandatory information, including the DUNS number or the DUNS+4 number, into the CCR database;

(2) The Contractor's CAGE code is in the CCR database; and

(3) The Government has validated all mandatory data fields and has marked the records “Active.”

(b)(1) By submission of an offer, the offeror acknowledges the requirement that a prospective awardee shall be registered in the CCR database prior to award, during performance, and through final payment of any contract, basic agreement, basic ordering agreement, or blanket purchasing agreement resulting from this solicitation.

(2) The offeror shall enter, in the block with its name and address on the cover page of its offer, the annotation “DUNS” or “DUNS +4” followed by the DUNS or DUNS +4 number that identifies the offeror's name and address exactly as stated in the offer. The DUNS number will be used by the Contracting Officer to verify that the offeror is registered in the CCR database.

(c) If the offeror does not have a DUNS number, it should contact Dun and Bradstreet directly to obtain one.

(1) An offeror may obtain a DUNS number--

(i) If located within the United States, by calling Dun and Bradstreet at 1-866-705-5711 or via the Internet at http://www.dnb.com; or

(ii) If located outside the United States, by contacting the local Dun and Bradstreet office.

(2) The offeror should be prepared to provide the following information:

(i) Company legal business.

(ii) Tradestyle, doing business, or other name by which your entity is commonly recognized.

(iii) Company Physical Street Address, City, State, and Zip Code.

(iv) Company Mailing Address, City, State and Zip Code (if separate from physical).

(v) Company Telephone Number.

(vi) Date the company was started.

(vii) Number of employees at your location.

(viii) Chief executive officer/key manager.

(ix) Line of business (industry).

(x) Company Headquarters name and address (reporting relationship within your entity).

(d) If the Offeror does not become registered in the CCR database in the time prescribed by the Contracting Officer, the Contracting Officer will proceed to award to the next otherwise successful registered Offeror.

(e) Processing time, which normally takes 48 hours, should be taken into consideration when registering. Offerors who are not registered should consider applying for registration immediately upon receipt of this solicitation.

(f) The Contractor is responsible for the accuracy and completeness of the data within the CCR database, and for any liability resulting from the Government's reliance on inaccurate or incomplete data. To remain registered in the CCR database after the initial registration, the Contractor is required to review and update on an annual basis from the date of initial registration or subsequent updates its information in the CCR database to ensure it is current, accurate and complete. Updating information in the CCR does not alter the terms and conditions of this contract and is not a substitute for a properly executed contractual document.

(g)(1)(i) If a Contractor has legally changed its business name, “doing business as” name, or division name (whichever is shown on the contract), or has transferred the assets used in performing the contract, but has not completed the necessary requirements regarding novation and change-of-name agreements in Subpart 42.12, the Contractor shall provide the responsible Contracting Officer a minimum of one business day's written notification of its intention to (A) change the name in the CCR database; (B) comply with the requirements of Subpart 42.12 of the FAR; and (C) agree in writing to the timeline and procedures specified by the responsible Contracting Officer. The Contractor must provide with the notification sufficient documentation to support the legally changed name.

(ii) If the Contractor fails to comply with the requirements of paragraph (g)(1)(i) of this clause, or fails to perform the agreement at paragraph (g)(1)(i)(C) of this clause, and, in the absence of a properly executed novation or change-of-name agreement, the CCR information that shows the Contractor to be other than the Contractor indicated in the contract will be considered to be incorrect information within the meaning of the “Suspension of Payment” paragraph of the electronic funds transfer (EFT) clause of this contract.

(2) The Contractor shall not change the name or address for EFT payments or manual payments, as appropriate, in the CCR record to reflect an assignee for the purpose of assignment of claims (see FAR Subpart 32.8, Assignment of Claims). Assignees shall be separately registered in the CCR database. Information provided to the Contractor's CCR record that indicates payments, including those made by EFT, to an ultimate recipient other than that Contractor will be considered to be incorrect information within the meaning of the “Suspension of payment” paragraph of the EFT clause of this contract.

(h) Offerors and Contractors may obtain information on registration and annual confirmation requirements via the internet at http://www.ccr.gov or by calling 1-888-227-2423, or 269-961-5757.

(End of clause)

252.209-7000 ACQUISITION FROM SUBCONTRACTORS SUBJECT TO ONSITE INSPECTION UNDER THE INTERMEDIATE-RANGE NUCLEAR FORCES (INF) TREATY (NOV 1995)

(a) The Contractor shall not deny consideration for a subcontract award under this contract to a potential subcontractor subject to on-site inspection under the INF Treaty, or a similar treaty, solely or in part because of the actual or potential presence of Soviet inspectors at the subcontractor's facility, unless the decision is approved by the Contracting Officer.

(b) The Contractor shall incorporate this clause, including this paragraph (b), in all solicitations and contracts exceeding the simplified acquisition threshold in part 13 of the Federal Acquisition Regulation, except those for commercial items.

(End of clause)

252.209-7004 SUBCONTRACTING WITH FIRMS THAT ARE OWNED OR CONTROLLED BY THE

GOVERNMENT OF A TERRORIST COUNTRY (MAR 1998)

(a) Unless the Government determines that there is a compelling reason to do so, the Contractor shall not enter into any subcontract in excess of $25,000 with a firm, or subsidiary of a firm, that is identified, on the List of Parties Excluded from Federal Procurement and Nonprocurement Programs, as being ineligible for the award of Defense contracts or subcontracts because it is owned or controlled by the government of a terrorist country.

(b) A corporate officer or a designee of the Contractor shall notify the Contracting Officer, in writing, before entering into a subcontract with a party that is identified, on the List of Parties Excluded from Federal Procurement and Nonprocurement Programs, as being ineligible for the award of Defense contracts or subcontracts because it is owned or controlled by the government of a terrorist country. The notice must include the name of the proposed subcontractor notwithstanding its inclusion on the List of Parties Excluded From Federal Procurement and Nonprocurement Programs.

(End of clause)

252.223-7004 DRUG-FREE WORK FORCE (SEP 1988)

(a) Definitions.

(1) "Employee in a sensitive position," as used in this clause, means an employee who has been granted access to classified information; or employees in other positions that the Contractor determines involve national security; health or safety, or functions other than the foregoing requiring a high degree of trust and confidence.

(2) "Illegal drugs," as used in this clause, means controlled substances included in Schedules I and II, as defined by section 802(6) of title 21 of the United States Code, the possession of which is unlawful under chapter 13 of that Title. The term "illegal drugs" does not mean the use of a controlled substance pursuant to a valid prescription or other uses authorized by law.

(b) The Contractor agrees to institute and maintain a program for achieving the objective of a drug-free work force. While this clause defines criteria for such a program, contractors are encouraged to implement alternative approaches comparable to the criteria in paragraph (c) that are designed to achieve the objectives of this clause.

(c) Contractor programs shall include the following, or appropriate alternatives:

(1) Employee assistance programs emphasizing high level direction, education, counseling, rehabilitation, and coordination with available community resources;

(2) Supervisory training to assist in identifying and addressing illegal drug use by Contractor employees;

(3) Provision for self-referrals as well as supervisory referrals to treatment with maximum respect for individual confidentiality consistent with safety and security issues;

(4) Provision for identifying illegal drug users, including testing on a controlled and carefully monitored basis. Employee drug testing programs shall be established taking account of the following:

(i) The Contractor shall establish a program that provides for testing for the use of illegal drugs by employees in sensitive positions. The extent of and criteria for such testing shall be determined by the Contractor based on considerations that include the nature of the work being performed under the contract, the employee's duties, and efficient use of Contractor resources, and the risks to health, safety, or national security that could result from the failure of an employee adequately to discharge his or her position.

(ii) In addition, the Contractor may establish a program for employee drug testing--

(A) When there is a reasonable suspicion that an employee uses illegal drugs; or

(B) When an employees has been involved in an accident or unsafe practice;

(C) As part of or as a follow-up to counseling or rehabilitation for illegal drug use;

(D) As part of a voluntary employee drug testing program.

(iii) The Contractor may establish a program to test applicants for employment for illegal drug use.

(iv) For the purpose of administering this clause, testing for illegal drugs may be limited to those substances for which testing is prescribed by section 2..1 of subpart B of the "Mandatory Guidelines for Federal Workplace Drug Testing Programs" (53 FR 11980 (April 11, 1988), issued by the Department of Health and Human Services.

(d) Contractors shall adopt appropriate personnel procedures to deal with employees who are found to be using drugs illegally. Contractors shall not allow any employee to remain on duty or perform in a sensitive position who is found to use illegal drugs until such times as the Contractor, in accordance with procedures established by the Contractor, determines that the employee may perform in such a position.

(e) The provisions of this clause pertaining to drug testing program shall not apply to the extent that are inconsistent with state or local law, or with an existing collective bargaining agreement; provided that with respect to the latter, the Contractor agrees those issues that are in conflict will be a subject of negotiation at the next collective bargaining session.

(End of clause)

252.225-7001 BUY AMERICAN ACT AND BALANCE OF PAYMENTS PROGRAM (APR 2003)

(a) Definitions. As used in this clause--

(1) Component means an article, material, or supply incorporated directly into an end product.

(2) Domestic end product means--

(i) An unmanufactured end product that has been mined or produced in the United States; or

(ii) An end product manufactured in the United States if the cost of its qualifying country components and its components that are mined, produced, or manufactured in the United States exceeds 50 percent of the cost of all its components. The cost of components includes transportation costs to the place of incorporation into the end product and U.S. duty (whether or not a duty-free entry certificate is issued). Scrap generated, collected, and prepared for processing in the United States is considered domestic. A component is considered to have been mined, produced, or manufactured in the United States (regardless of its source in fact) if the end product in which it is incorporated is manufactured in the United States and the component is of a class or kind for which the Government has determined that--

(A) Sufficient and reasonably available commercial quantities of a satisfactory quality are not mined, produced, or manufactured in the United States; or

(B) It is inconsistent with the public interest to apply the restrictions of the Buy American Act.

(3) End product means those articles, materials, and supplies to be acquired under this contract for public use.

(4) Foreign end product means an end product other than a domestic end product.

(5) Qualifying country means any country set forth in subsection 225.872-1 of the Defense Federal Acquisition Regulation Supplement.

(6) Qualifying country component means a component mined, produced, or manufactured in a qualifying country.

(7) Qualifying country end product means--

(i) An unmanufactured end product mined or produced in a qualifying country; or

(ii) An end product manufactured in a qualifying country if the cost of the following types of components exceeds 50 percent of the cost of all its components:

(A) Components mined, produced, or manufactured in a qualifying country.

(B) Components mined, produced, or manufactured in the United States.

(C) Components of foreign origin of a class or kind for which the Government has determined that sufficient and reasonably available commercial quantities of a satisfactory quality are not mined, produced, or manufactured in the United States.

(b) This clause implements the Buy American Act (41 U.S.C. Section 10a-d). Unless otherwise specified, this clause applies to all line items in the contract.

(c) The Contractor shall deliver only domestic end products unless, in its offer, it specified delivery of other end products in the Buy American Act--Balance of Payments Program Certificate provision of the solicitation. If the Contractor certified in its offer that it will deliver a qualifying country end product, the Contractor shall deliver a qualifying country end product or, at the Contractor's option, a domestic end product.

(d) The contract price does not include duty for end products or components for which the Contractor will claim duty-free entry.

(End of clause)

252.225-7002 QUALIFYING COUNTRY SOURCES AS SUBCONTRACTORS (APR 2003)

(a) Definition. Qualifying country, as used in this clause, means any country set forth in subsection 225.872-1 of the Defense Federal Acquisition Regulation (FAR) Supplement.

(b) Subject to the restrictions in section 225.872 of the Defense FAR Supplement, the Contractor shall not preclude qualifying country sources or U.S. sources from competing for subcontracts under this contract.

(End of clause)

252.225-7013 DUTY-FREE ENTRY (JAN 2004)

(a) Definitions. As used in this clause--

(1) Customs territory of the United States means the States, the District of Columbia, and Puerto Rico.

(2) Eligible product means--

(i) Designated country end product or Caribbean Basin country end product as defined in the Trade Agreements clause of this contract;

(ii) Free Trade Agreement country end product as defined in the Trade Agreements clause or the Buy American Act--Free Trade Agreements--Balance of Payments Program clause of this contract; or

(iii) Canadian end product as defined in Alternate I of the Buy American Act--Free Trade Agreements--Balance of Payments Program clause of this contract.

(3) Qualifying country and qualifying country end product have the meanings given in the Trade Agreements clause, the Buy American Act and Balance of Payments Program clause, or the Buy American Act--Free Trade Agreements--Balance of Payments Program clause of this contract.

(b) Except as provided in paragraph (i) of this clause, or unless supplies were imported into the United States before the date of this contract or the applicable subcontract, the price of this contract shall not include any amount for duty on--

(1) End items that are eligible products or qualifying country end products;

(2) Components (including, without limitation, raw materials and intermediate assemblies) produced or made in qualifying countries, that are to be incorporated in U.S.-made end products to be delivered under this contract; or

(3) Other supplies for which the Contractor estimates that duty will exceed $200 per shipment into the customs territory of the United States.

(c) The Contractor shall--

(1) Claim duty-free entry only for supplies that the Contractor intends to deliver to the Government under this contract, either as end items or components of end items; and

(2) Pay duty on supplies, or any portion thereof, that are diverted to nongovernmental use, other than--

(i) Scrap or salvage; or

(ii) Competitive sale made, directed, or authorized by the Contracting Officer.

(d) Except as the Contractor may otherwise agree, the Government will execute duty-free entry certificates and will afford such assistance as appropriate to obtain the duty-free entry of supplies--

(1) For which no duty is included in the contract price in accordance with paragraph (b) of this clause; and

(2) For which shipping documents bear the notation specified in paragraph (e) of this clause.

(e) For foreign supplies for which the Government will issue duty-free entry certificates in accordance with this clause, shipping documents submitted to Customs shall--

(1) Consign the shipments to the appropriate--

(i) Military department in care of the Contractor, including the Contractor's delivery address; or

(ii) Military installation; and

(2) Include the following information:

(i) Prime contract number and, if applicable, delivery order number.

(ii) Number of the subcontract for foreign supplies, if applicable.

(iii) Identification of the carrier.

(iv) (A) For direct shipments to a U.S. military installation, the notation: ``UNITED STATES GOVERNMENT, DEPARTMENT OF DEFENSE Duty-Free Entry to be claimed pursuant to Section XXII, Chapter 98, Subchapter VIII, Item 9808.00.30 of the Harmonized Tariff Schedule of the United States. Upon arrival of shipment at the appropriate port of entry, District Director of Customs, please release shipment under 19 CFR part 142 and notify Commander, Defense Contract Management Agency (DCMA) New York, ATTN: Customs Team, DCMAE-GNTF, 207 New York Avenue, Staten Island, New York, 10305-5013, for execution of Customs Form 7501, 7501A, or 7506 and any required duty-free entry certificates."

(B) If the shipment will be consigned to other than a military installation, e.g., a domestic contractor's plant, the shipping document notation shall be altered to include the name and address of the contractor, agent, or broker who will notify Commander, DCMA New York, for execution of the duty-free entry certificate. (If the shipment will be consigned to a contractor's plant and no duty-free entry certificate is required due to a trade agreement, the Contractor shall claim duty-free entry under the applicable trade agreement and shall comply with the U.S. Customs Service requirements. No notification to Commander, DCMA New York, is required.)

(v) Gross weight in pounds (if freight is based on space tonnage, state cubic feet in addition to gross shipping weight).

(vi) Estimated value in U.S. dollars.

(vii) Activity address number of the contract administration office administering the prime contract, e.g., for DCMA Dayton, S3605A.

(f) Preparation of customs forms.

(1)(i) Except for shipments consigned to a military installation, the Contractor shall--

(A) Prepare any customs forms required for the entry of foreign supplies into the United States in connection with this contract; and

(B) Submit the completed customs forms to the District Director of Customs, with a copy to DCMA NY for execution of any required duty-free entry certificates.

(ii) Shipments consigned directly to a military installation will be released in accordance with sections 10.101 and 10.102 of the U.S. Customs regulations.

(2) For shipments containing both supplies that are to be accorded duty-free entry and supplies that are not, the Contractor shall identify on the customs forms those items that are eligible for duty-free entry.

(g) The Contractor shall--

(1) Prepare (if the Contractor is a foreign supplier), or shall instruct the foreign supplier to prepare, a sufficient number of copies of the bill of lading (or other shipping document) so that at least two of the copies accompanying the shipment will be available for use by the District Director of Customs at the port of entry;

(2) Consign the shipment as specified in paragraph (e) of this clause; and

(3) Mark on the exterior of all packages--

(i) ``UNITED STATES GOVERNMENT, DEPARTMENT OF DEFENSE''; and

(ii) The activity address number of the contract administration office administering the prime contract.

(h) The Contractor shall notify the Administrative Contracting Officer (ACO) in writing of any purchase of qualifying country supplies to be accorded duty-free entry, that are to be imported into the United States for delivery to the Government or for incorporation in end items to be delivered to the Government. The Contractor shall furnish the notice to the ACO immediately upon award to the qualifying country supplier and shall include in the notice--

(1) The Contractor's name, address, and Commercial and Government Entity (CAGE) code;

(2) Prime contract number and, if applicable, delivery order number;

(3) Total dollar value of the prime contract or delivery order;

(4) Date of the last scheduled delivery under the prime contract or delivery order;

(5) Foreign supplier's name and address;

(6) Number of the subcontract for foreign supplies;

(7) Total dollar value of the subcontract for foreign supplies;

(8) Date of the last scheduled delivery under the subcontract for foreign supplies;

(9) List of items purchased;

(10) An agreement that the Contractor will pay duty on supplies, or any portion thereof, that are diverted to nongovernmental use other than--

(i) Scrap or salvage; or

(ii) Competitive sale made, directed, or authorized by the Contracting Officer;

(11) Qualifying country of origin; and

(12) Scheduled delivery date(s).

(i) This clause does not apply to purchases of qualifying country supplies in connection with this contract if--

(1) The supplies are identical in nature to supplies purchased by the Contractor or any subcontractor in connection with its commercial business; and

(2) It is not economical or feasible to account for such supplies so as to ensure that the amount of the supplies for which duty-free entry is claimed does not exceed the amount purchased in connection with this contract.

(j) The Contractor shall--

(1) Insert the substance of this clause, including this paragraph (j), in all subcontracts for--

(i) Qualifying country components; or

(ii) Nonqualifying country components for which the Contractor estimates that duty will exceed $200 per unit;

(2) Require subcontractors to include the number of this contract on all shipping documents submitted to Customs for supplies for which duty-free entry is claimed pursuant to this clause; and

(3) Include in applicable subcontracts--

(i) The name and address of the ACO for this contract;

(ii) The name, address, and activity address number of the contract administration office specified in this contract; and

(iii) The information required by paragraphs (h)(1), (2), and (3) of this clause.

(End of clause)

252.225-7031 SECONDARY ARAB BOYCOTT OF ISRAEL (APR 2003)

(a) Definitions. As used in this provision--

(1) Foreign person means any person (including any individual, partnership, corporation, or other form of association) other than a United States person.

(2) United States person is defined in 50 U.S.C. App. 2415(2) and means--

(i) Any United States resident or national (other than an individual resident outside the United States who is employed by other than a United States person);

(ii) Any domestic concern (including any permanent domestic establishment of any foreign concern); and

(iii) Any foreign subsidiary or affiliate (including any permanent foreign establishment) of any domestic concern that is controlled in fact by such domestic concern.

(b) Certification. If the offeror is a foreign person, the offeror certifies, by submission of an offer, that it--

(1) Does not comply with the Secondary Arab Boycott of Israel; and

(2) Is not taking or knowingly agreeing to take any action, with respect to the Secondary Boycott of Israel by Arab countries, which 50 U.S.C. App. 2407(a) prohibits a United States person from taking.

(End of provision)

252.227-7013 RIGHTS IN TECHNICAL DATA--NONCOMMERCIAL ITEMS. (NOV 1995)

(a) Definitions. As used in this clause:

(1) Computer data base means a collection of data recorded in a form capable of being processed by a computer. The term does not include computer software.

(2) Computer program means a set of instructions, rules, or routines recorded in a form that is capable of causing a computer to perform a specific operation or series of operations.

(3) Computer software means computer programs, source code, source code listings, object code listings, design details, algorithms, processes, flow charts, formulae and related material that would enable the software to be reproduced, recreated, or recompiled. Computer software does not include computer data bases or computer software documentation.

(4) Computer software documentation means owner's manuals, user's manuals, installation instructions, operating instructions, and other similar items, regardless of storage medium, that explain the capabilities of the computer software or provide instructions for using the software.

(5) Detailed manufacturing or process data means technical data that describe the steps, sequences, and conditions of manufacturing, processing or assembly used by the manufacturer to produce an item or component or to perform a process.

(6) Developed means that an item, component, or process exists and is workable. Thus, the item or component must have been constructed or the process practiced. Workability is generally established when the item, component, or process has been analyzed or tested sufficiently to demonstrate to reasonable people skilled in the applicable art that there is a high probability that it will operate as intended. Whether, how much, and what type of analysis or testing is required to establish workability depends on the nature of the item, component, or process, and the state of the art. To be considered "developed," the item, component, or process need not be at the stage where it could be offered for sale or sold on the commercial market, nor must the item, component, or process be actually reduced to practice within the meaning of Title 35 of the United States Code.

(7) Developed exclusively at private expense means development was accomplished entirely with costs charged to indirect cost pools, costs not allocated to a government contract, or any combination thereof.

(i) Private expense determinations should be made at the lowest practicable level.

(ii) Under fixed-price contracts, when total costs are greater than the firm-fixed-price or ceiling price of the contract, the additional development costs necessary to complete development shall not be considered when determining whether development was at government, private, or mixed expense.

(8) Developed exclusively with government funds means development was not accomplished exclusively or partially at private expense.

(9) Developed with mixed funding means development was accomplished partially with costs charged to indirect cost pools and/or costs not allocated to a government contract, and partially with costs charged directly to a government contract.

(10) Form, fit, and function data means technical data that describes the required overall physical, functional, and performance characteristics (along with the qualification requirements, if applicable) of an item, component, or process to the extent necessary to permit identification of physically and functionally interchangeable items.

(11) Government purpose means any activity in which the United States Government is a party, including cooperative agreements with international or multi-national defense organizations, or sales or transfers by the United States Government to foreign governments or international organizations. Government purposes include competitive procurement, but do not include the rights to use, modify, reproduce, release, perform, display, or disclose technical data for commercial purposes or authorize others to do so.

(12) Government purpose rights means the rights to--

(i) Use, modify, reproduce, release, perform, display, or disclose technical data within the Government without restriction; and

(ii) Release or disclose technical data outside the Government and authorize persons to whom release or disclosure has been made to use, modify, reproduce, release, perform, display, or disclose that data for United States government purposes.

(13) Limited rights means the rights to use, modify, reproduce, release, perform, display, or disclose technical data, in whole or in part, within the Government. The Government may not, without the written permission of the party asserting limited rights, release or disclose the technical data outside the Government, use the technical data for manufacture, or authorize the technical data to be used by another party, except that the Government may reproduce,

release or disclose such data or authorize the use or reproduction of the data by persons outside the Government if reproduction, release, disclosure, or use is--

(i) Necessary for emergency repair and overhaul; or

(ii) A release or disclosure of technical data (other than detailed manufacturing or process data) to, or use of such data by, a foreign government that is in the interest of the Government and is required for evaluational or informational purposes;

(iii) Subject to a prohibition on the further reproduction, release, disclosure, or use of the technical data; and

(iv) The contractor or subcontractor asserting the restriction is notified of such reproduction, release, disclosure, or use.

(14) Technical data means recorded information, regardless of the form or method of the recording, of a scientific or technical nature (including computer software documentation). The term does not include computer software or data incidental to contract administration, such as financial and/or management information.

(15) Unlimited rights means rights to use, modify, reproduce, perform, display, release, or disclose technical data in whole or in part, in any manner, and for any purpose whatsoever, and to have or authorize others to do so.

(b) Rights in technical data. The Contractor grants or shall obtain for the Government the following royalty free, world-wide, nonexclusive, irrevocable license rights in technical data other than computer software documentation (see the Rights in Noncommercial Computer Software and Noncommercial Computer Software Documentation clause of this contract for rights in computer software documentation):

(1) Unlimited rights.

The Government shall have unlimited rights in technical data that are--

(i) Data pertaining to an item, component, or process which has been or will be developed exclusively with Government funds;

(ii) Studies, analyses, test data, or similar data produced for this contract, when the study, analysis, test, or similar work was specified as an element of performance;

(iii) Created exclusively with Government funds in the performance of a contract that does not require the development, manufacture, construction, or production of items, components, or processes;

(iv) Form, fit, and function data;

(v) Necessary for installation, operation, maintenance, or training purposes (other than detailed manufacturing or process data);

(vi) Corrections or changes to technical data furnished to the Contractor by the Government;

(vii) Otherwise publicly available or have been released or disclosed by the Contractor or subcontractor without restrictions on further use, release or disclosure, other than a release or disclosure resulting from the sale, transfer, or other assignment of interest in the technical data to another party or the sale or transfer of some or all of a business entity or its assets to another party;

(viii) Data in which the Government has obtained unlimited rights under another Government contract or as a result of negotiations; or

(ix) Data furnished to the Government, under this or any other Government contract or subcontract thereunder, with--

(A) Government purpose license rights or limited rights and the restrictive condition(s) has/have expired; or

(B) Government purpose rights and the Contractor's exclusive right to use such data for commercial purposes has expired.

(2) Government purpose rights.

(i) The Government shall have government purpose rights for a five-year period, or such other period as may be negotiated, in technical data--

(A) That pertain to items, components, or processes developed with mixed funding except when the Government is entitled to unlimited rights in such data as provided in paragraphs (b)(ii) and (b)(iv) through (b)(ix) of this clause; or

(B) Created with mixed funding in the performance of a contract that does not require the development, manufacture, construction, or production of items, components, or processes.

(ii) The five-year period, or such other period as may have been negotiated, shall commence upon execution of the contract, subcontract, letter contract (or similar contractual instrument), contract modification, or option exercise that required development of the items, components, or processes or creation of the data described in paragraph (b)(2)(i)(B) of this clause. Upon expiration of the five-year or other negotiated period, the Government shall have unlimited rights in the technical data.

(iii) The Government shall not release or disclose technical data in which it has government purpose rights unless-

(A) Prior to release or disclosure, the intended recipient is subject to the non-disclosure agreement at 227.7103-7 of the Defense Federal Acquisition Regulation Supplement (DFARS); or

(B) The recipient is a Government contractor receiving access to the data for performance of a Government contract that contains the clause at DFARS 252.227-7025, Limitations on the Use or Disclosure of Government-Furnished Information Marked with Restrictive Legends.

(iv) The Contractor has the exclusive right, including the right to license others, to use technical data in which the Government has obtained government purpose rights under this contract for any commercial purpose during the time period specified in the government purpose rights legend prescribed in paragraph (f)(2) of this clause.

(3) Limited rights.

(i) Except as provided in paragraphs (b)(1)(ii) and (b)(1)(iv) through (b)(1)(ix) of this clause, the Government shall have limited rights in technical data--

(A) Pertaining to items, components, or processes developed exclusively at private expense and marked with the limited rights legend prescribed in paragraph (f) of this clause; or

(B) Created exclusively at private expense in the performance of a contract that does not require the development, manufacture, construction, or production of items, components, or processes.

(ii) The Government shall require a recipient of limited rights data for emergency repair or overhaul to destroy the data and all copies in its possession promptly following completion of the emergency repair/overhaul and to notify the Contractor that the data have been destroyed.

(iii) The Contractor, its subcontractors, and suppliers are not required to provide the Government additional rights to use, modify, reproduce, release, perform, display, or disclose technical data furnished to the Government with limited rights. However, if the Government desires to obtain additional rights in technical data in which it has limited rights, the Contractor agrees to promptly enter into negotiations with the Contracting Officer to determine whether there are acceptable terms for transferring such rights. All technical data in which the Contractor has

granted the Government additional rights shall be listed or described in a license agreement made part of the contract. The license shall enumerate the additional rights granted the Government in such data.

(4) Specifically negotiated license rights.

The standard license rights granted to the Government under paragraphs (b)(1) through (b)(3) of this clause, including the period during which the Government shall have government purpose rights in technical data, may be modified by mutual agreement to provide such rights as the parties consider appropriate but shall not provide the Government lesser rights than are enumerated in paragraph (a)(13) of this clause. Any rights so negotiated shall be identified in a license agreement made part of this contract.

(5) Prior government rights.

Technical data that will be delivered, furnished, or otherwise provided to the Government under this contract, in which the Government has previously obtained rights shall be delivered, furnished, or provided with the pre-existing rights, unless--

(i) The parties have agreed otherwise; or

(ii) Any restrictions on the Government's rights to use, modify, reproduce, release, perform, display, or disclose the data have expired or no longer apply.

(6) Release from liability.

The Contractor agrees to release the Government from liability for any release or disclosure of technical data made in accordance with paragraph (a)(13) or (b)(2)(iii) of this clause, in accordance with the terms of a license negotiated under paragraph (b)(4) of this clause, or by others to whom the recipient has released or disclosed the data and to seek relief solely from the party who has improperly used, modified, reproduced, released, performed, displayed, or disclosed Contractor data marked with restrictive legends.

(c) Contractor rights in technical data. All rights not granted to the Government are retained by the Contractor.

(d) Third party copyrighted data. The Contractor shall not, without the written approval of the Contracting Officer, incorporate any copyrighted data in the technical data to be delivered under this contract unless the Contractor is the copyright owner or has obtained for the Government the license rights necessary to perfect a license or licenses in the deliverable data of the appropriate scope set forth in paragraph (b) of this clause, and has affixed a statement of the license or licenses obtained on behalf of the Government and other persons to the data transmittal document.

(e) Identification and delivery of data to be furnished with restrictions on use, release, or disclosure. (1) This paragraph does not apply to restrictions based solely on copyright.

(2) Except as provided in paragraph (e)(3) of this clause, technical data that the Contractor asserts should be furnished to the Government with restrictions on use, release, or disclosure are identified in an attachment to this contract (the Attachment). The Contractor shall not deliver any data with restrictive markings unless the data are listed on the Attachment.

(3) In addition to the assertions made in the Attachment, other assertions may be identified after award when based on new information or inadvertent omissions unless the inadvertent omissions would have materially affected the source selection decision. Such identification and assertion shall be submitted to the Contracting Officer as soon as practicable prior to the scheduled date for delivery of the data, in the following format, and signed by an official authorized to contractually obligate the Contractor: Identification and Assertion of Restrictions on the Government's Use, Release, or Disclosure of Technical Data.

The Contractor asserts for itself, or the persons identified below, that the Government's rights to use, release, or disclose the following technical data should be restricted--

Technical data to be Furnished With Restrictions \1/	Basis for Assertion \2/	Asserted Rights Category \3/	Name of Person Asserting Restrictions \4/
(LIST)	(LIST)	(LIST)	(LIST)

\1/ If the assertion is applicable to items, components or processes developed at private expense, identify both the data and each such items, component, or process.

\2/ Generally, the development of an item, component, or process at private expense, either exclusively or partially, is the only basis for asserting restrictions on the Government's rights to use, release, or disclose technical data pertaining to such items, components, or processes. Indicate whether development was exclusively or partially at private expense. If development was not at private expense, enter the specific reason for asserting that the Government's rights should be restricted.

\3/ Enter asserted rights category (e.g., government purpose license rights from a prior contract, rights in SBIR data generated under another contract, limited or government purpose rights under this or a prior contract, or specifically negotiated licenses).

\4/ Corporation, individual, or other person, as appropriate.
Date _____

Printed Name and Title _____

_____

Signature _____

(End of identification and assertion)

(4) When requested by the Contracting Officer, the Contractor shall provide sufficient information to enable the Contracting Officer to evaluate the Contractor's assertions. The Contracting Officer reserves the right to add the Contractor's assertions to the Attachment and validate any listed assertion, at a later date, in accordance with the procedures of the Validation of Restrictive Markings on Technical Data clause of this contract.

(f) Marking requirements. The Contractor, and its subcontractors or suppliers, may only assert restrictions on the Government's rights to use, modify, reproduce, release, perform, display, or disclose technical data to be delivered under this contract by marking the deliverable data subject to restriction. Except as provided in paragraph (f)(5) of this clause, only the following legends are authorized under this contract: the government purpose rights legend at paragraph (f)(2) of this clause; the limited rights legend at paragraph (f)(3) of this clause; or the special license rights legend at paragraph (f)(4) of this clause; and/or a notice of copyright as prescribed under 17 U.S.C. 401 or 402.

(1) General marking instructions. The Contractor, or its subcontractors or suppliers, shall conspicuously and legibly mark the appropriate legend on all technical data that qualify for such markings. The authorized legends shall be placed on the transmittal document or storage container and, for printed material, each page of the printed material containing technical data for which restrictions are asserted. When only portions of a page of printed material are subject to the asserted restrictions, such portions shall be identified by circling, underscoring, with a note, or other appropriate identifier. Technical data transmitted directly from one computer or computer terminal to another shall contain a notice of asserted restrictions. Reproductions of technical data or any portions thereof subject to asserted restrictions shall also reproduce the asserted restrictions.

(2) Government purpose rights markings. Data delivered or otherwise furnished to the Government purpose rights shall be marked as follows:

Government Purpose Rights

Contract No. _____

Contractor Name _____

Contractor Address _____

_____

Expiration Date _____

The Government's rights to use, modify, reproduce, release, perform, display, or disclose these technical data are restricted by paragraph (b)(2) of the Rights in Technical Data--Noncommercial Items clause contained in the above identified contract. No restrictions apply after the expiration date shown above. Any reproduction of technical data or portions thereof marked with this legend must also reproduce the markings.

(End of legend)

(3) Limited rights markings. Data delivered or otherwise furnished to the Government with limited rights shall be marked with the following legend:

Limited Rights

Contract No. _____

Contractor Name _____

Contractor Address _____

_____

The Government's rights to use, modify, reproduce, release, perform, display, or disclose these technical data are restricted by paragraph (b)(3) of the Rights in Technical Data--Noncommercial Items clause contained in the above identified contract. Any reproduction of technical data or portions thereof marked with this legend must also reproduce the markings. Any person, other than the Government, who has been provided access to such data must promptly notify the above named Contractor.

(End of legend)

(4) Special license rights markings. (i) Data in which the Government's rights stem from a specifically negotiated license shall be marked with the following legend:

Special License Rights

The Government's rights to use, modify, reproduce, release, perform, display, or disclose these data are restricted by Contract No. _____ (Insert contract number) _____, License No. _____ (Insert license identifier) _____. Any reproduction of technical data or portions thereof marked with this legend must also reproduce the markings.

(End of legend)

(ii) For purposes of this clause, special licenses do not include government purpose license rights acquired under a prior contract (see paragraph (b)(5) of this clause).

(5) Pre-existing data markings. If the terms of a prior contract or license permitted the Contractor to restrict the Government's rights to use, modify, reproduce, release, perform, display, or disclose technical data deliverable under

this contract, and those restrictions are still applicable, the Contractor may mark such data with the appropriate restrictive legend for which the data qualified under the prior contract or license. The marking procedures in paragraph (f)(1) of this clause shall be followed.

(g) Contractor procedures and records. Throughout performance of this contract, the Contractor and its subcontractors or suppliersthat will deliver technical data with other than unlimited rights, shall--

(1) Have, maintain, and follow written procedures sufficient to assure that restrictive markings are used only when authorized by the terms of this clause; and

(2) Maintain records sufficient to justify the validity of any restrictive markings on technical data delivered under this contract.

(h) Removal of unjustified and nonconforming markings. (1) Unjustified technical data markings. The rights and obligations of the parties regarding the validation of restrictive markings on technical data furnished or to be furnished under this contract are contained in the Validation of Restrictive Markings on Technical Data clause of this contract. Notwithstanding any provision of this contract concerning inspection and acceptance, the Government may ignore or, at the Contractor's expense, correct or strike a marking if, in accordance with the procedures in the Validation of Restrictive Markings on Technical Data clause of this contract, a restrictive marking is determined to be unjustified.

(2) Nonconforming technical data markings. A nonconforming marking is a marking placed on technical data delivered or otherwise furnished to the Government under this contract that is not in the format authorized by this contract. Correction of nonconforming markings is not subject to the validation of Restrictive Markings on Technical Data clause of this contract. If the Contracting Officer notifies the Contractor of a nonconforming marking and the Contractor fails to remove or correct such marking within sixty (60) days, the Government may ignore or, at the Contractor's expense, remove or correct any nonconforming marking.

(i) Relation to patents. Nothing contained in this clause shall imply a license to the Government under any patent or be construed as affecting the scope of any license or other right otherwise granted to the Government under any patent.

(j) Limitation on charges for rights in technical data. (1) The Contractor shall not charge to this contract any cost, including, but not limited to, license fees, royalties, or similar charges, for rights in technical data to be delivered under this contract when--

(i) The Government has acquired, by any means, the same or greater rights in the data; or

(ii) The data are available to the public without restrictions.

(2) The limitation in paragraph (j)(1) of this clause--

(i) Includes costs charged by a subcontractor or supplier, at any tier, or costs incurred by the Contractor to acquire rights in subcontractor or supplier technical data, if the subcontractor or supplier has been paid for such rights under any other Government contract or under a license conveying the rights to the Government; and

(ii) Does not include the reasonable costs of reproducing, handling, or mailing the documents or other media in which the technical data will be delivered.

(k) Applicability to subcontractors or suppliers. (1) The Contractor shall ensure that the rights afforded its subcontractors and suppliers under 10 U.S.C. 2320, 10 U.S.C. 2321, and the identification, assertion, and delivery processes of paragraph (e) of this clause are recognized and protected.

(2) Whenever any technical data for noncommercial items is to be obtained from a subcontractor or supplier for delivery to the Government under this contract, the Contractor shall use this same clause in the subcontract or other contractual instrument, and require its subcontractors or suppliers to do so, without alteration, except to identify the

parties. No other clause shall be used to enlarge or diminish the Government's, the Contractor's, or a higher-tier subcontractor's or supplier's rights in a subcontractor's or supplier's technical data.

(3) Technical data required to be delivered by a subcontractor or supplier shall normally be delivered to the next higher-tier contractor, subcontractor, or supplier. However, when there is a requirement in the prime contract for data which may be submitted with other than unlimited rights by a subcontractor or supplier, then said subcontractor or supplier may fulfill its requirement by submitting such data directly to the Government, rather than through a higher-tier contractor, subcontractor, or supplier.

(4) The Contractor and higher-tier subcontractors or suppliers shall not use their power to award contracts as economic leverage to obtain rights in technical data from their subcontractors or suppliers. (5) In no event shall the Contractor use its obligation to recognize and protect subcontractor or supplier rights in technical data as an excuse for failing to satisfy its contractual obligations to the Government.

(End of clause)

252.227-7030 TECHNICAL DATA--WITHHOLDING OF PAYMENT (MAR 2000)

(a) If technical data specified to be delivered under this contract, is not delivered within the time specified by this contract or is deficient upon delivery (including having restrictive markings not identified in the list described in the clause at 252.227-7013(e)(2) or 252.227-7018(e)(2) of this contract), the Contracting Officer may until such data is accepted by the Government, withhold payment to the Contractor of ten percent (10%) of the total contract price or amount unless a lesser withholding is specified in the contract. Payments shall not be withheld nor any other action taken pursuant to this paragraph when the Contractor's failure to make timely delivery or to deliver such data without deficiencies arises out of causes beyond the control and without the fault or negligence of the Contractor.

(b) The withholding of any amount or subsequent payment to the Contractor shall not be construed as a waiver of any rights accruing to the Government under this contract.

(End of clause)

252.227-7036 DECLARATION OF TECHNICAL DATA CONFORMITY (JAN 1997)

All technical data delivered under this contract shall be accompanied by the following written declaration:

The Contractor, _____, hereby declares that, to the best of its knowledge and belief, the technical data delivered herewith under Contract No. _____ is complete, accurate, and complies with all requirements of the contract.

Date _____

Name and Title of Authorized Official _____

(End of clause)

252.227-7037 VALIDATION OF RESTRICTIVE MARKINGS ON TECHNICAL DATA. (SEP 199)

(a) Definitions. The terms used in this clause are defined in the Rights in Technical Data--Noncommercial Items clause of this contract.

(b) Contracts for commercial items--presumption of development at private expense. Under a contract for a commercial item, component, or process, the Department of Defense shall presume that a Contractor's asserted use

or release restrictions are justified on the basis that the item, component, or process was developed exclusively at private expense. The Department shall not challenge such assertions unless information the Department provides demonstrates that the item, component, or process was not developed exclusively at private expense.

(c) Justification. The Contractor or subcontractor at any tier is responsible for maintaining records sufficient to justify the validity of its markings that impose restrictions on the Government and others to use, duplicate, or disclose technical data delivered or required to be delivered under the contract or subcontract. Except under contracts for commercial items, the Contractor or subcontractor shall be prepared to furnish to the Contracting Officer a written justification for such restrictive markings in response to a challenge under paragraph (e) of this clause.

(d) Prechallenge request for information. (1) The Contracting Officer may request the Contractor or subcontractor to furnish a written explanation for any restriction asserted by the Contractor or subcontractor on the right of the United States or others to use technical data. If, upon review of the explanation submitted, the Contracting Officer remains unable to ascertain the basis of the restrictive marking, the Contracting Officer may further request the Contractor or subcontractor to furnish additional information in the records of, or otherwise in the possession of or reasonably available to, the Contractor or subcontractor to justify the validity of any restrictive marking on technical data delivered or to be delivered under the contract or subcontract (e.g., a statement of facts accompanied with supporting documentation). The Contractor or subcontractor shall submit such written data as requested by the Contracting Officer within the time required or such longer period as may be mutually agreed.

(2) If the Contracting Officer, after reviewing the written data furnished pursuant to paragraph (d)(1) of this clause, or any other available information pertaining to the validity of a restrictive marking, determines that reasonable grounds exist to question the current validity of the marking and that continued adherence to the marking would make impracticable the subsequent competitive acquisition of the item, component, or process to which the technical data relates, the Contracting Officer shall follow the procedures in paragraph (e) of this clause.

(3) If the Contractor or subcontractor fails to respond to the Contracting Officer's request for information under paragraph (d)(1) of this clause, and the Contracting Officer determines that continued adherence to the marking would make impracticable the subsequent competitive acquisition of the item, component, or process to which the technical data relates, the Contracting Officer may challenge the validity of the marking as described in paragraph (e) of this clause.

(e) Challenge.

(1) Notwithstanding any provision of this contract concerning inspection and acceptance, if the Contracting Officer determines that a challenge to the restrictive marking is warranted, the Contracting Officer shall send a written challenge notice to the Contractor or subcontractor asserting the restrictive markings. Such challenge shall--

(i) State the specific grounds for challenging the asserted restriction;

(ii) Require a response within sixty (60) days justifying and providing sufficient evidence as to the current validity of the asserted restriction;

(iii) State that a DoD Contracting Officer's final decision, issued pursuant to paragraph (g) of this clause, sustaining the validity of a restrictive marking identical to the asserted restriction, within the three-year period preceding the challenge, shall serve as justification for the asserted restriction if the validated restriction was asserted by the same Contractor or subcontractor (or any licensee of such Contractor or subcontractor) to which such notice is being provided; and

(iv) State that failure to respond to the challenge notice may result in issuance of a final decision pursuant to paragraph (f) of this clause.

(2) The Contracting Officer shall extend the time for response as appropriate if the Contractor or subcontractor submits a written request showing the need for additional time to prepare a response.

(3) The Contractor's or subcontractor's written response shall be considered a claim within the meaning of the Contract Disputes Act of 1978 (41 U.S.C. 601, et seq.), and shall be certified in the form prescribed at 33.207 of the Federal Acquisition Regulation, regardless of dollar amount.

(4) A Contractor or subcontractor receiving challenges to the same restrictive markings from more than one Contracting Officer shall notify each Contracting Officer of the existence of more than one challenge. The notice shall also state which Contracting Officer initiated the first in time unanswered challenge. The Contracting Officer initiating the first in time unanswered challenge after consultation with the Contractor or subcontractor and the other Contracting Officers, shall formulate and distribute a schedule for responding to each of the challenge notices to all interested parties. The schedule shall afford the Contractor or subcontractor an opportunity to respond to each challenge notice. All parties will be bound by this schedule.

(f) Final decision when Contractor or subcontractor fails to respond. Upon a failure of a Contractor or subcontractor to submit any response to the challenge notice, other than a failure to respond under a contract for commercial items, the Contracting Officer will issue a final decision to the Contractor or subcontractor in accordance with the Disputes clause of this contract pertaining to the validity of the asserted restriction. This final decision shall be issued as soon as possible after the expiration of the time period of paragraph (e)(1)(ii) or (e)(2) of this clause. Following issuance of the final decision, the Contracting Officer will comply with the procedures in paragraphs (g)(2) (ii) through (iv) of this clause.

(g) Final decision when Contractor or subcontractor responds.

(1) if the Contracting Officer determines that the Contractor or subcontractor has justified the validity of the restrictive marking, the Contracting Officer shall issue a final decision to the Contractor or subcontractor sustaining the validity of the restrictive marking, and stating that the Government will continue to be bound by the restrictive marking. This final decision shall be issued within sixty (60) days after receipt of the Contractor's or subcontractor's response to the challenge notice, or within such longer period that the Contracting Officer has notified the Contractor or subcontractor that the Government will require. The notification of a longer period for issuance of a final decision will be made within sixty (60) days after receipt of the response to the challenge notice.

(2)(i) If the Contracting Officer determines that the validity of the restrictive marking is not justified, the Contracting Officer shall issue a final decision to the Contractor or subcontractor in accordance with the Disputes clause of this contract. Notwithstanding paragraph (e) of the Disputes clause, the final decision shall be issued within sixty (60) days after receipt of the Contractor's or subcontractor's response to the challenge notice, or within such longer period that the Contracting Officer has notified the Contractor or subcontractor of the longer period that the Government will require. The notification of a longer period for issuance of a final decision will be made within sixty (60) days after receipt of the response to the challenge notice.

(ii) The Government agrees that it will continue to be bound by the restrictive marking of a period of ninety (90) days from the issuance of the Contracting Officer's final decision under paragraph (g)(2)(i) of this clause. The Contractor or subcontractor agrees that, if it intends to file suit in the United States Claims Court it will provide a notice of intent to file suit to the Contracting Officer within ninety (90) days from the issuance of the Contracting Officer's final decision under paragraph (g)(2)(i) of this clause. If the Contractor or subcontractor fails to appeal, file suit, or provide a notice of intent to file suit to the Contracting Officer within the ninety (90)-day period, the Government may cancel or ignore the restrictive markings, and the failure of the Contractor or subcontractor to take the required action constitutes agreement with such Government action.

(iii) The Government agrees that it will continue to be bound by the restrictive marking where a notice of intent to file suit in the United States Claims Court is provided to the Contracting Officer within ninety (90) days from the issuance of the final decision under paragraph (g)(2)(i) of this clause. The Government will no longer be bound, and the Contractor or subcontractor agrees that the Government may strike or ignore the restrictive markings, if the Contractor or subcontractor fails to file its suit within one (1) year after issuance of the final decision. Notwithstanding the foregoing, where the head of an agency determines, on a nondelegable basis, that urgent or compelling circumstances will not permit waiting for the filing of a suit in the United States Claims Court, the Contractor or subcontractor agrees that the agency may, following notice to the Contractor or subcontractor, authorize release or disclosure of the technical data. Such agency determination may be made at any time after

issuance of the final decision and will not affect the Contractor's or subcontractor's right to damages against the United States where its restrictive markings are ultimately upheld or to pursue other relief, if any, as may be provided by law.

(iv) The Government agrees that it will be bound by the restrictive marking where an appeal or suit is filed pursuant to the Contract Disputes Act until final disposition by an agency Board of Contract Appeals or the United States Claims Court. Notwithstanding the foregoing, where the head of an agency determines, on a nondelegable basis, following notice to the Contractor that urgent or compelling circumstances will not permit awaiting the decision by such Board of Contract Appeals or the United States Claims Court, the Contractor or subcontractor agrees that the agency may authorize release or disclosure of the technical data. Such agency determination may be made at any time after issuance of the final decision and will not affect the Contractor's or subcontractor's right to damages against the United States where its restrictive markings are ultimately upheld or to pursue other relief, if any, as may be provided by law.

(h) Final disposition of appeal or suit. (1) If the Contractor or subcontractor appeals or files suit and if, upon final disposition of the appeal or suit, the Contracting Officer's decision is sustained--

(i) The restrictive marking on the technical data shall be cancelled, corrected or ignored; and

(ii) If the restrictive marking is found not to be substantially justified, the Contractor or subcontractor, as appropriate, shall be liable to the Government for payment of the cost to the Government of reviewing the restrictive marking and the fees and other expenses (as defined in 28 U.S.C. 2412(d)(2)(A)) incurred by the Government in challenging the marking, unless special circumstances would make such payment unjust.

(2) If the Contractor or subcontractor appeals or files suit and if, upon final disposition of the appeal or suit, the Contracting Officer's decision is not sustained--

(i) The Government shall continue to be bound by the restrictive marking; and

(ii) The Government shall be liable to the Contractor or subcontractor for payment of fees and other expenses (as defined in 28 U.S.C. 2412(d)(2)(A)) incurred by the Contractor or subcontractor in defending the marking, if the challenge by the Government is found not to have been made in good faith.

(i) Duration of right to challenge. The Government may review the validity of any restriction on technical data, delivered or to be delivered under a contract, asserted by the Contractor or subcontractor. During the period within three (3) years of final payment on a contract or within three (3) years of delivery of the technical data to the Government, whichever is later, the Contracting Officer may review and make a written determination to challenge the restriction. The Government may, however, challenge a restriction on the release, disclosure or use of technical data at any time if such technical data--

(1) Is publicly available;

(2) Has been furnished to the United States without restriction; or

(3) Has been otherwise made available without restriction. Only the Contracting Officer's final decision resolving a formal challenge by sustaining the validity of a restrictive marking constitutes "validation" as addressed in 10 U.S.C. 2321.

(j) Decision not to challenge. A decision by the Government, or a determination by the Contracting Officer, to not challenge the restrictive marking or asserted restriction shall not constitute "validation."

(k) Privity of contract. The Contractor or subcontractor agrees that the Contracting Officer may transact matters under this clause directly with subcontractors at any tier that assert restrictive markings. However, this clause neither creates nor implies privity of contract between the Government and subcontractors.

(l) Flowdown. The Contractor or subcontractor agrees to insert this clause in contractual instruments with its subcontractors or suppliers at any tier requiring the delivery of technical data, except contractual instruments for commercial items or commercial components.

(End of clause)

252.231-7000 SUPPLEMENTAL COST PRINCIPLES (DEC 1991)

When the allowability of costs under this contract is determined in accordance with part 31 of the Federal Acquisition Regulation (FAR), allowability shall also be determined in accordance with part 231 of the Defense FAR Supplement, in effect on the date of this contract.

(End of clause)

252.232-7003 ELECTRONIC SUBMISSION OF PAYMENT REQUESTS (JAN 2004)

(a) Definitions. As used in this clause--

(1) Contract financing payment and invoice payment have the meanings given in section 32.001 of the Federal Acquisition Regulation.

(2) Electronic form means any automated system that transmits information electronically from the initiating system to all affected systems. Facsimile, e-mail, and scanned documents are not acceptable electronic forms for submission of payment requests. However, scanned documents are acceptable when they are part of a submission of a payment request made using one of the electronic forms provided for in paragraph (b) of this clause.

(3) Payment request means any request for contract financing payment or invoice payment submitted by the Contractor under this contract.

(b) Except as provided in paragraph (c) of this clause, the Contractor shall submit payment requests using one of the following electronic forms:

(1) Wide Area WorkFlow-Receipt and Acceptance (WAWF-RA). Information regarding WAWF-RA is available on the Internet at https://wawf.eb.mil.

(2) Web Invoicing System (WInS). Information regarding WInS is available on the Internet at https://ecweb.dfas.mil.

(3) American National Standards Institute (ANSI) X.12 electronic data interchange (EDI) formats.

(i) Information regarding EDI formats is available on the Internet at http://www.X12.org.

(ii) EDI implementation guides are available on the Internet at http://www.dfas.mil/ecedi.

(4) Another electronic form authorized by the Contracting Officer.

(c) If the Contractor is unable to submit a payment request in electronic form, or DoD is unable to receive a payment request in electronic form, the Contractor shall submit the payment request using a method mutually agreed to by the Contractor, the Contracting Officer, the contract administration office, and the payment office.

(d) In addition to the requirements of this clause, the Contractor shall meet the requirements of the appropriate payment clauses in this contract when submitting payments requests.

(End of clause)

252.243-7001 PRICING OF CONTRACT MODIFICATIONS (DEC 1991)

When costs are a factor in any price adjustment under this contract, the contract cost principles and procedures in FAR part 31 and DFARS part 231, in effect on the date of this contract, apply.

252.243-7002 REQUESTS FOR EQUITABLE ADJUSTMENT (MAR 1998)

(a) The amount of any request for equitable adjustment to contract terms shall accurately reflect the contract adjustment for which the Contractor believes the Government is liable. The request shall include only costs for performing the change, and shall not include any costs that already have been reimbursed or that have been separately claimed. All indirect costs included in the request shall be properly allocable to the change in accordance with applicable acquisition regulations.

(b) In accordance with 10 U.S.C. 2410(a), any request for equitable adjustment to contract terms that exceeds the simplified acquisition threshold shall bear, at the time of submission, the following certificate executed by an individual authorized to certify the request on behalf of the Contractor:

I certify that the request is made in good faith, and that the supporting data are accurate and complete to the best of my knowledge and belief.

(Official's Name)

(Title)

(c) The certification in paragraph (b) of this clause requires full disclosure of all relevant facts, including--

(1) Cost or pricing data if required in accordance with subsection 15.403-4 of the Federal Acquisition Regulation (FAR); and

(2) Information other than cost or pricing data, in accordance with subsection 15.403-3 of the FAR, including actual cost data and data to support any estimated costs, even if cost or pricing data are not required.

(d) The certification requirement in paragraph (b) of this clause does not apply to----

(1) Requests for routine contract payments; for example, requests for payment for accepted supplies and services, routine vouchers under a cost-reimbursement type contract, or progress payment invoices; or

(2) Final adjustment under an incentive provision of the contract.

252.247-7023 TRANSPORTATION OF SUPPLIES BY SEA (MAY 2002)

(a) Definitions. As used in this clause --

(1) "Components" means articles, materials, and supplies incorporated directly into end products at any level of manufacture, fabrication, or assembly by the Contractor or any subcontractor.

(2) "Department of Defense" (DoD) means the Army, Navy, Air Force, Marine Corps, and defense agencies.

(3) "Foreign flag vessel" means any vessel that is not a U.S.-flag vessel.

(4) "Ocean transportation" means any transportation aboard a ship, vessel, boat, barge, or ferry through international waters.

(5) "Subcontractor" means a supplier, materialman, distributor, or vendor at any level below the prime contractor whose contractual obligation to perform results from, or is conditioned upon, award of the prime contract and who is performing any part of the work or other requirement of the prime contract.

(6) "Supplies" means all property, except land and interests in land, that is clearly identifiable for eventual use by or owned by the DoD at the time of transportation by sea.

(i) An item is clearly identifiable for eventual use by the DoD if, for example, the contract documentation contains a reference to a DoD contract number or a military destination.

(ii) "Supplies" includes (but is not limited to) public works; buildings and facilities; ships; floating equipment and vessels of every character, type, and description, with parts, subassemblies, accessories, and equipment; machine tools; material; equipment; stores of all kinds; end items; construction materials; and components of the foregoing.

(7) "U.S.-flag vessel" means a vessel of the United States or belonging to the United States, including any vessel registered or having national status under the laws of the United States.

(b)(1) The Contractor shall use U.S.-flag vessels when transporting any supplies by sea under this contract.

(2) A subcontractor transporting supplies by sea under this contract shall use U.S.-flag vessels if--

(i) This contract is a construction contract; or

(ii) The supplies being transported are--

(A) Noncommercial items; or

(B) Commercial items that--

(1) The Contractor is reselling or distributing to the Government without adding value (generally, the Contractor does not add value to items that it contracts for f.o.b. destination shipment);

(2) Are shipped in direct support of U.S. military contingency operations, exercises, or forces deployed in humanitarian or peacekeeping operations; or

(3) Are commissary or exchange cargoes transported outside of the Defense Transportation System in accordance with 10 U.S.C. 2643.

(c) The Contractor and its subcontractors may request that the Contracting Officer authorize shipment in foreign-flag vessels, or designate available U.S.-flag vessels, if the Contractor or a subcontractor believes that --

(1) U.S.-flag vessels are not available for timely shipment;

(2) The freight charges are inordinately excessive or unreasonable; or

(3) Freight charges are higher than charges to private persons for transportation of like goods.

(d) The Contractor must submit any request for use of other than U.S.-flag vessels in writing to the Contracting Officer at least 45 days prior to the sailing date necessary to meet its delivery schedules. The Contracting Officer will process requests submitted after such date(s) as expeditiously as possible, but the Contracting Officer's failure

to grant approvals to meet the shipper's sailing date will not of itself constitute a compensable delay under this or any other clause of this contract. Requests shall contain at a minimum --

(1) Type, weight, and cube of cargo;

(2) Required shipping date;

(3) Special handling and discharge requirements;

(4) Loading and discharge points;

(5) Name of shipper and consignee;

(6) Prime contract number; and

(7) A documented description of efforts made to secure U.S.-flag vessels, including points of contact (with names and telephone numbers) with at least two U.S.-flag carriers contacted. Copies of telephone notes, telegraphic and facsimile message or letters will be sufficient for this purpose.

(e) The Contractor shall, within 30 days after each shipment covered by this clause, provide the Contracting Officer and the Maritime Administration, Office of Cargo Preference, U.S. Department of Transportation, 400 Seventh Street SW., Washington, DC 20590, one copy of the rated on board vessel operating carrier's ocean bill of lading, which shall contain the following information:

(1) Prime contract number;

(2) Name of vessel;

(3) Vessel flag of registry;

(4) Date of loading;

(5) Port of loading;

(6) Port of final discharge;

(7) Description of commodity;

(8) Gross weight in pounds and cubic feet if available;

(9) Total ocean freight in U.S. dollars; and

(10) Name of the steamship company.

(f) The Contractor shall provide with its final invoice under this contract a representation that to the best of its knowledge and belief--

(1) No ocean transportation was used in the performance of this contract;

(2) Ocean transportation was used and only U.S.-flag vessels were used for all ocean shipments under the contract;

(3) Ocean transportation was used, and the Contractor had the written consent of the Contracting Officer for all non-U.S.-flag ocean transportation; or

(4) Ocean transportation was used and some or all of the shipments were made on non-U.S.-flag vessels without the written consent of the Contracting Officer. The Contractor shall describe these shipments in the following format:

ITEM DESCRIPTION	CONTRACT LINE ITEMS	QUANTITY

TOTAL_____

(g) If the final invoice does not include the required representation, the Government will reject and return it to the Contractor as an improper invoice for the purposes of the Prompt Payment clause of this contract. In the event there has been unauthorized use of non-U.S.-flag vessels in the performance of this contract, the Contracting Officer is entitled to equitably adjust the contract, based on the unauthorized use.

(h) In the award of subcontracts for the types of supplies described in paragraph (b)(2) of this clause, the Contractor shall flow down the requirements of this clause as follows:

(1) The Contractor shall insert the substance of this clause, including this paragraph (h), in subcontracts that exceed the simplified acquisition threshold in part 2 of the Federal Acquisition Regulation.

(2) The Contractor shall insert the substance of paragraphs (a) through (e) of this clause, and this paragraph (h), in subcontracts that are at or below the simplified acquisition threshold in part 2 of the Federal Acquisition Regulation.

(End of clause)

252.247-7024 NOTIFICATION OF TRANSPORTATION OF SUPPLIES BY SEA (MAR 2000)

(a) The Contractor has indicated by the response to the solicitation provision, Representation of Extent of Transportation by Sea, that it did not anticipate transporting by sea any supplies. If, however, after the award of this contract, the Contractor learns that supplies, as defined in the Transportation of Supplies by Sea clause of this contract, will be transported by sea, the Contractor --

(1) Shall notify the Contracting Officer of that fact; and

(2) Hereby agrees to comply with all the terms and conditions of the Transportation of Supplies by Sea clause of this contract.

(b) The Contractor shall include this clause; including this paragraph (b), revised as necessary to reflect the relationship of the contracting parties--

(1) In all subcontracts under this contract, if this contract is a construction contract; or

(2) If this contract is not a construction contract, in all subcontracts under this contract that are for--

(i) Noncommercial items; or

(ii) Commercial items that--

(A) The Contractor is reselling or distributing to the Government without adding value (generally, the Contractor does not add value to items that it subcontracts for f.o.b. destination shipment);

(B) Are shipped in direct support of U.S. military contingency operations, exercises, or forces deployed in humanitarian or peacekeeping operations; or

(C) Are commissary or exchange cargoes transported outside of the Defense Transportation System in accordance with 10 U.S.C. 2643.

(End of clause)

This page was intentionally left blank for duplex printing.

PART III
LIST OF DOCS, EXHIBITS AND ATTACHMENTS
SECTION J

TABLE OF CONTENTS

CLAUSE PAGE

J01 CONTRACT & REFERENCE DRAWINGS.....2

J02 ENG FORM 2454.....3

J03 PERFORMANCE EVALUATION FOR SERVICE & SUPPLY CONTRACTS.....5

PART III
LIST OF DOCS, EXHIBITS AND ATTACHMENTS
SECTION J

J01 CONTRACT & REFERENCE DRAWINGS

The following drawings shall form a part of this solicitation. All drawings will be provided to the successful bidder in electronic file form.

A. CONTRACT DRAWINGS

Drawing Number	Title	Revision
610-B105-01	LINES PLAN	2
610-B105-02	FRAMES & OFFSETS	2
610-B130-01	TANK CAPACITY PLAN	2
610-B205-01	OUTBOARD PROFILE	2
610-B215-01	GENERAL ARRANGEMENT	2
610-B233-01	PILOTHOUSE DETAILS	2
610-B245-01	HOLD & MACHINERY ARRANGEMENT	2
610-B301-02	INBOARD PROFILE	2
610-B306-01	TRANSVERSE & LONGITUDINAL STRUCTURE	2
610-B307-01	DECK & BOTTOM STRUCTURE	1
610-B460-01	COMMUNICATIONS MARK	0
610-B480-01	TELEPHONE\DATA COMMUNICATIONS\TV SYSTEMS	1
610-B605-01	PROPULSION & SHAFTING ARRANGEMENT	1
610-B612-01	RUDDER ARRANGEMENT	2
610-B615-01	STEERING LINKAGE & STRUT	1

B. REFERENCE DRAWINGS

Drawing Number	Title	Revision
556-B313-01	SPRING ISOLATION DETAILS	1
518-D410-02	RUBBER FENDERING	0
518-D472-01	TRANSDUCER WELL	0
518-D669-01	DRAINAGE SYSTEM	0
518-D692-01	GENERAL ALARM SYSTEM	0
518-D692-02	BILGE ALARM SYSTEM SCHEMATIC	0
603-D720-02	ONE-LINE DIAGRAM (DC)	0

J02 ENG FORM 2454

The Contractor shall utilize the ENG Form 2454 for the Construction Plan required by Clause H06.

CONSTRUCTION PROGRESS CHART

REPORTS CONTROL SYMBOL

1. CONTRACTOR	3. PROJECT	5. CONTRACT DESCRIPTION	6. SUBMITTED FOR APPROVAL	DATE
2. CONTRACT NUMBER	4. LOCATION		7. APPROVED PROGRAM DATE	DATE
			8. APPROVED	DATE

LEGEND

BARS:
Scheduled progress to date of report
Actual progress

CURVES:
Scheduled progress ——— Actual progress ———

PROJECT CONTROL NUMBER	ENG. ITEM	WT.	ESTIMATED COST	

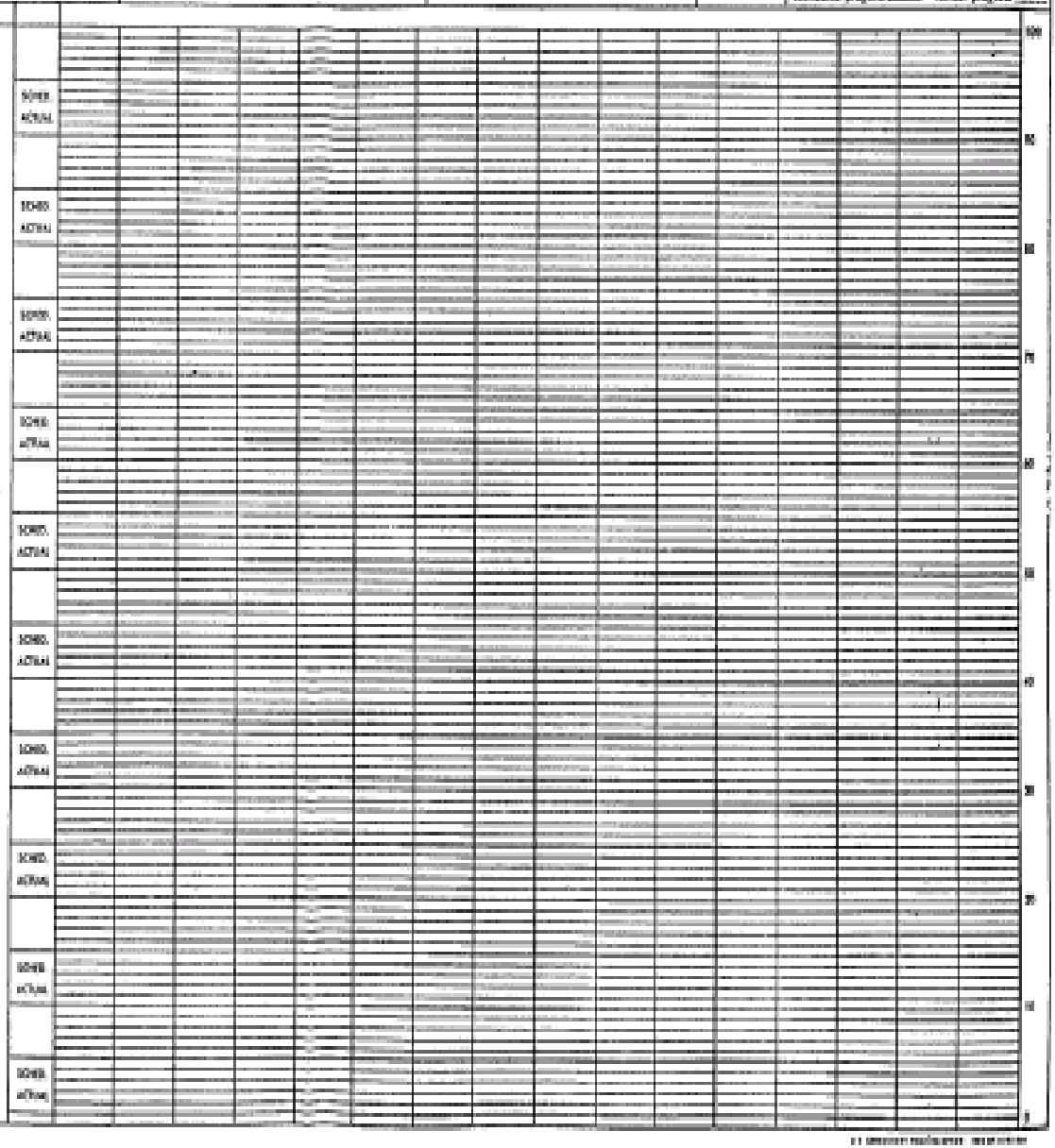

ENG FORM 2454 (Transferred) PREVIOUS EDITION IS OBSOLETE

J03 PERFORMANCE EVALUATION FOR SERVICE & SUPPLY CONTRACTS

In accordance with FAR 42.15, AFAR 42.15, and Army Acquisition Letter 98-1, this contract action is subject to the requirement for Contractor performance evaluation in the elements listed on the attached form.

At a minimum, the performance evaluation shall be completed within 45 days of completion of each year's performance. Additional (Interim) evaluations may be prepared if any element listed is being performed unsatisfactorily.

The period of evaluation will begin on the date of acknowledgment of receipt of the Notice to Proceed and will run concurrent with the performance period of the contract.

The Contractor shall be provided thirty (30) days to submit comments, rebut statements, or provide additional information before the final performance evaluation is issued. This period may be shortened if an interim unsatisfactory evaluation is being contemplated and time does not allow for a full thirty (30) days.

The Contractor may appeal a final performance evaluation to the Commander of the Contracting Activity. The appeal must be made within thirty (30) days, and must be a written request to the Contracting Officer stating the reasons why a further review of their performance evaluation is justified, and the circumstances which may be cause the Government to revise its performance rating. Interim evaluations are not subject to appeal.

Performance Assessment Report (PAR)

- ☐ Interim
- ☐ Final
- ☐ Addendum

Period Report: From _____ To _____

Section I	
1a. Contractor:	2a. Contract Number:
Address:	2b. Modification Number:
	2c. Del/Task Order Number:
	2d. Initial Value (Base + Options): $
Place of Performance:	2e. Current Value: $
1b. Cage Code:	3a. Award Date:
1c. DUNS No.:	3b. Completion Date:

Section II	
4a. Contractor POC: Name: Position/Title: Address: Phone No.: FAX: E-Mail Address:	4b. Gov't Contract Specialist: Name: Address: Phone No.: FAX: E-mail Address:

Section III				
5. Method of Contract: ☐ Sealed Bid ☐ Negotiated				
6. Type of Contract: (Check all that apply)				
☐ FFP ☐ FFP-EPA ☐ FPIF ☐ FPR[P]	☐ FPR[R] ☐ FFP-LOE ☐ T&M ☐ CR	☐ CS ☐ CPIF ☐ CPAF ☐ CPFF[C]	☐ CPFF[T] ☐ Labor Hour ☐ ID ☐ IQ	☐ Rqmts ☐ BOA ☐ Letter ☐ Other
7. Socio-economic Program:				
☐ SBSA	☐ 8(a)	☐ SBIR	☐ SBCDP	☐ Other
8. Competition:				
☐ Full and Open Competition	☐ Sole Source	☐ Other		
9. Type of Supply/Services:				
☐ Commercial	☐ Non-Developmental	☐ Non-Commercial		

Section IV		
10. Business Sector:		
☐ Space ☐ Ordnance ☐ Aircraft ☐ Training System	☐ Ground Vehicles ☐ Shipbuilding ☐ Other Systems ☐ Operations Support	☐ Information Technology ☐ Science & Technology ☐ Services ☐ Health Care Services
11a. FSCs:		
11b. SICs:		

12. Description of Requirement:

Section V

(All business Sectors other than Systems)

The rating assigned to an element/sub-element must be supported by narrative rationale. Narratives are required for all ratings, and must clearly convey to the contractor, as well as to a Government source selection official who is not familiar with the instant contract, why the rating was assigned. This is especially important for any rating above or below "satisfactory." Narratives should be supported by quantifiable or verifiable documentation. While larger or more complex efforts warrant greater detail, the guideline for any narrative is "clear and concise."

14a. Quality of Product/Service

Rating: (check one)

- ☐ Exceptional
- ☐ Very Good
- ☐ Satisfactory
- ☐ Marginal
- ☐ Unsatisfactory

Narrative rationale:

14b. Schedule

Rating: (check one)

- ☐ Exceptional
- ☐ Very Good
- ☐ Satisfactory
- ☐ Marginal
- ☐ Unsatisfactory

Narrative rationale:

14c. Cost Control

Rating: (check one)

- ☐ Exceptional
- ☐ Very Good
- ☐ Satisfactory
- ☐ Marginal
- ☐ Unsatisfactory

Narrative rationale:

14d. Business Relations

Rating: (check one)

- ☐ Exceptional
- ☐ Very Good
- ☐ Satisfactory
- ☐ Marginal
- ☐ Unsatisfactory

Narrative rationale:

14e. Management of Key Personnel

Rating: (check one)

- ☐ Exceptional
- ☐ Very Good
- ☐ Satisfactory
- ☐ Marginal
- ☐ Unsatisfactory

Narrative rationale: _____

14f. Other (Optional)

Rating: (check one)

- ☐ Exceptional
- ☐ Very Good
- ☐ Satisfactory
- ☐ Marginal
- ☐ Unsatisfactory

Narrative rationale: _____

Section VI

15. Evaluator Name: Phone: FAX: E-Mail:	Signature: Date Approved by Evaluator:
16. Contracting Officer/PM Name: Phone: FAX: E-Mail:	Signature: Date Approved by Evaluator:
17. Agency Review Name: Phone: FAX: E-Mail:	Signature: Date Approved by Evaluator:
18. Contractor Review Name: Position/Title: Phone: FAX: E-Mail:	Comments provided? ☐ Yes ☐ No If YES, indicate number of pages attached ( ) Date of Receipt of Contractor Response: _____
19. Resolution Authority Name: Phone: FAX: E-Mail:	Date Referred: _____ Date of Resolution: _____
20. Source Selection Availability Date of Final Review: _____	Date PAR entered into PPIMS: _____

Section V

Non-Systems Contracts Performance Elements: Assess contractor performance using the following elements:

14a. **Quality of Product or Service** - Assess the contractor's conformance to contract requirements, specifications and standards of good workmanship (e.g., commonly accepted technical, professional, environmental, or safety and health standards).

14b. **Schedule** - Assess the timeliness of the contractor against the completion of the contract, task orders, milestones, delivery schedules, administrative requirements (e.g. efforts that contribute to or effect the schedule variance).

14c. **Cost Control** (Not required for FFP and FFP w/EPA contracts) - Assess the contractor's effectiveness in forecasting, managing and controlling contract cost.

14d. **Business Relations** - Assess the integration and coordination of all activity needed to execute the contract, specifically the timeliness, completeness and quality of problem identification, corrective action plans, proposal submittals, the contractor's history of reasonable and cooperative behavior, customer satisfaction, timely award and management of subcontracts, and whether the contractor met small/small disadvantaged and women-owned business participation goals.

14e. **Mananernent of Key Personnel** (For services and information technology contracts only) -Assess the contractor's performance in selecting, retaining, supporting, and replacing, when necessary, key personnel

***Rating System:** use the following rating system to assess contractor performance for . **all PPI elements (14a. through 14e.)**:

(1) **Exceptional** - Performance meets contractual requirements and exceeds many to the Government's benefit. The contractual performance of the element or sub-element being assessed was accomplished with few minor problems for which corrective actions taken by the contractor were highly effective.

(2) **Very Good** - Performance meets contractual requirements and exceeds some to the Government's benefit. The contractual performance of the element or sub-element being assessed was accomplished with some minor problems for which corrective actions taken by the contractor were effective.

(3) **Satisfactory** - Performance meets contractual requirements. The contractual performance of the element or sub-element contains some minor problems for which corrective actions taken by the contractor appear or were satisfactory.

(4) Marginal - Performance does not meet some contractual requirements. The contractual performance of the element or sub-element being assessed reflects a serious problem for which the contractor has not yet identified corrective actions. The contractor's proposed actions appear only marginally effective or were not fully implemented.

(5) **Unsatisfactory** - Performance does not meet most contractual requirements and recovery is not likely in a timely manner. The contractual performance of the element or subelement contains serious problem(s) for which the contractor's corrective actions appear or were ineffective.

The rating* assigned to an element/sub-element must be supported by narrative rationale. Narratives are required for all ratings, and must clearly convey to the contractor, as well as to a Government source selection official who is not familiar with the instant contract, why the rating was assigned. This is especially important for any rating above or below "satisfactory." Narratives should be supported by quantifiable or verifiable documentation. While larger or more complex efforts warrant greater detail, the guideline for any narrative is "clear and concise."

THIS PAGE INTENTIONALLY LEFT BLANK

52.203-2	Certificate Of Independent Price Determination	APR 1985
52.203-11	Certification And Disclosure Regarding Payments To Influence Certain Federal Transactions	APR 1991
52.204-3	Taxpayer Identification	OCT 1998
52.204-5	Women-Owned Business (Other Than Small Business)	MAY 1999
52.209-5	Certification Regarding Debarment, Suspension, Proposed Debarment, And Other Responsibility Matters	DEC 2001
52.214-14	Place Of Performance--Sealed Bidding	APR 1985
52.219-1 Alt I	Small Business Program Representations (Apr 2002) Alternate I	APR 2002
52.219-2	Equal Low Bids	OCT 1995
52.222-21	Prohibition Of Segregated Facilities	FEB 1999
52.222-22	Previous Contracts And Compliance Reports	FEB 1999
52.222-25	Affirmative Action Compliance	APR 1984
52.223-13	Certification of Toxic Chemical Release Reporting	AUG 2003
252.209-7001	Disclosure of Ownership or Control by the Government of a Terrorist Country	MAR 1998
252.225-7000	Buy American Act--Balance Of Payments Program Certificate	APR 2003
252.247-7022	Representation Of Extent Of Transportation Of Supplies By Sea	AUG 1992

Small, Veteran-Owned Small, Service Disabled Veteran-Owned Small, Hubzone Small, Small Disadvantaged and Women-Owned Small Business Subcontracting Plan

This page was intentionally left blank for duplex printing.

52.203-2 CERTIFICATE OF INDEPENDENT PRICE DETERMINATION (APR 1985)

(a) The offeror certifies that --

(1) The prices in this offer have been arrived at independently, without, for the purpose of restricting competition, any consultation, communication, or agreement with any other offeror or competitor relating to –

(i) Those prices,

(ii) The intention to submit an offer, or

(iii) The methods of factors used to calculate the prices offered:

(2) The prices in this offer have not been and will not be knowingly disclosed by the offeror, directly or indirectly, to any other offeror or competitor before bid opening (in the case of a sealed bid solicitation) or contract award (in the case of a negotiated solicitation) unless otherwise required by law; and

(3) No attempt has been made or will be made by the offeror to induce any other concern to submit or not to submit an offer for the purpose of restricting competition.

(b) Each signature on the offer is considered to be a certification by the signatory that the signatory --

(1) Is the person in the offeror's organization responsible for determining the prices offered in this bid or proposal, and that the signatory has not participated and will not participate in any action contrary to subparagraphs (a)(1) through (a)(3) of this provision; or

(2) (i) Has been authorized, in writing, to act as agent for the following principals in certifying that those principals have not participated, and will not participate in any action contrary to subparagraphs (a)(1) through (a)(3) of this provison _____ (insert full name of person(s) in the offeror's organization responsible for determining the prices offered in this bid or proposal, and the title of his or her position in the offeror's organization);

(ii) As an authorized agent, does certify that the principals named in subdivision (b)(2)(i) above have not participated, and will not participate, in any action contrary to subparagraphs (a)(1) through (a)(3) above; and

(iii) As an agent, has not personally participated, and will not participate, in any action contrary to subparagraphs (a)(1) through (a)(3) of this provision.

(c) If the offeror deletes or modifies subparagraph (a)(2) of this provision, the offeror must furnish with its offer a signed statement setting forth in detail the circumstances of the disclosure.

(End of clause)

52.203-11 CERTIFICATION AND DISCLOSURE REGARDING PAYMENTS TO INFLUENCE CERTAIN FEDERAL TRANSACTIONS (APR 1991)

(a) The definitions and prohibitions contained in the clause, at FAR 52.203-12, Limitation on Payments to Influence Certain Federal Transactions, included in this solicitation, are hereby incorporated by reference in paragraph (b) of this Certification.

(b) The offeror, by signing its offer, hereby certifies to the best of his or her knowledge and belief that on or after

December 23, 1989,--

(1) No Federal appropriated funds have been paid or will be paid to any person for influencing or attempting to influence an officer or employee of any agency, a Member of Congress, an officer or employee of Congress, or an employee of a Member of Congress on his or her behalf in connection with the awarding of any Federal contract, the making of any Federal grant, the making of any Federal loan, the entering into of any cooperative agreement, and the extension, continuation, renewal, amendment or modification of any Federal contract, grant, loan, or cooperative agreement;

(2) If any funds other than Federal appropriated funds (including profit or fee received under a covered Federal transaction) have been paid, or will be paid to any person for influencing or attempting to influence an officer or employee of any agency, a Member of Congress, an officer or employee of Congress or an employee of a Member of Congress on his or her behalf in connection with this solicitation, the offeror shall complete and submit, with its offer, OMB standard form LLL, Disclosure of Lobbying Activities, to the Contracting Officer; and

(3) He or she will include the language of this certification in all subcontract awards at any tier and require that all recipients of subcontract awards in excess of $100,000 shall certify and disclose accordingly.

(a) Submission of this certification and disclosure is a prerequisite for making or entering into this contract imposed by section 1352, title 31, United States Code. Any person who makes an expenditure prohibited under this provision, shall be subject to a civil penalty of not less than $10,000, and not more than $100,000, for each such failure.

(End of provision)

52.204-3 TAXPAYER IDENTIFICATION (OCT 1998)

(a) Definitions.

“Common parent,” as used in this provision, means that corporate entity that owns or controls an affiliated group of corporations that files its Federal income tax returns on a consolidated basis, and of which the offeror is a member.

“Taxpayer Identification Number (TIN),” as used in this provision, means the number required by the Internal Revenue Service (IRS) to be used by the offeror in reporting income tax and other returns. The TIN may be either a Social Security Number or an Employer Identification Number.

(b) All offerors must submit the information required in paragraphs (d) through (f) of this provision to comply with debt collection requirements of 31 U.S.C. 7701(c) and 3325(d), reporting requirements of 26 U.S.C. 6041, 6041A, and 6050M, and implementing regulations issued by the IRS. If the resulting contract is subject to the payment reporting requirements described in Federal Acquisition Regulation (FAR) 4.904, the failure or refusal by the offeror to furnish the information may result in a 31 percent reduction of payments otherwise due under the contract.

(c) The TIN may be used by the Government to collect and report on any delinquent amounts arising out of the offeror's relationship with the Government (31 U.S.C. 7701(c)(3)). If the resulting contract is subject to the payment reporting requirements described in FAR 4.904, the TIN provided hereunder may be matched with IRS records to verify the accuracy of the offeror's TIN.

(d) Taxpayer Identification Number (TIN).

___ TIN:._____

___ TIN has been applied for.

___ TIN is not required because:

___ Offeror is a nonresident alien, foreign corporation, or foreign partnership that does not have income effectively connected with the conduct of a trade or business in the United States and does not have an office or place of business or a fiscal paying agent in the United States;

___ Offeror is an agency or instrumentality of a foreign government;

___ Offeror is an agency or instrumentality of the Federal Government.

(e) Type of organization.

___ Sole proprietorship;

___ Partnership;

___ Corporate entity (not tax-exempt);

___ Corporate entity (tax-exempt);

___ Government entity (Federal, State, or local);

___ Foreign government;

___ International organization per 26 CFR 1.6049-4;

___ Other _____

(f) Common parent.

___ Offeror is not owned or controlled by a common parent as defined in paragraph (a) of this provision.

___ Name and TIN of common parent:

Name _____

TIN _____

(End of provision)

52.204-5 WOMEN-OWNED BUSINESS (OTHER THAN SMALL BUSINESS) (MAY 1999)

(a) Definition. Women-owned business concern, as used in this provision, means a concern that is at least 51 percent owned by one or more women; or in the case of any publicly owned business, at least 51 percent of its stock is owned by one or more women; and whose management and daily business operations are controlled by one or more women.

(b) Representation. [Complete only if the offeror is a women-owned business concern and has not represented itself as a small business concern in paragraph (b)(1) of FAR 52.219-1, Small Business Program Representations, of this solicitation.] The offeror represents that it ( ) is a women-owned business concern.

(End of provision)

52.209-5 CERTIFICATION REGARDING DEBARMENT, SUSPENSION, PROPOSED DEBARMENT, AND OTHER RESPONSIBILITY MATTERS (DEC 2001)

(a)(1) The Offeror certifies, to the best of its knowledge and belief, that-

(i) The Offeror and/or any of its Principals-

(A) Are ( ) are not ( ) presently debarred, suspended, proposed for debarment, or declared ineligible for the award of contracts by any Federal agency;

(B) Have ( ) have not ( ), within a three-year period preceding this offer, been convicted of or had a civil judgment rendered against them for: commission of fraud or a criminal offense in connection with obtaining, attempting to obtain, or performing a public (Federal, state, or local) contract or subcontract; violation of Federal or state antitrust statutes relating to the submission of offers; or commission of embezzlement, theft, forgery, bribery, falsification or destruction of records, making false statements, tax evasion, or receiving stolen property; and

(C) Are ( ) are not ( ) presently indicted for, or otherwise criminally or civilly charged by a governmental entity with, commission of any of the offenses enumerated in paragraph (a)(1)(i)(B) of this provision.

(ii) The Offeror has ( ) has not ( ), within a three-year period preceding this offer, had one or more contracts terminated for default by any Federal agency.

(2) "Principals," for the purposes of this certification, means officers; directors; owners; partners; and, persons having primary management or supervisory responsibilities within a business entity (e.g., general manager; plant manager; head of a subsidiary, division, or business segment, and similar positions).

This Certification Concerns a Matter Within the Jurisdiction of an Agency of the United States and the Making of a False, Fictitious, or Fraudulent Certification May Render the Maker Subject to Prosecution Under Section 1001, Title 18, United States Code.

(b) The Offeror shall provide immediate written notice to the Contracting Officer if, at any time prior to contract award, the Offeror learns that its certification was erroneous when submitted or has become erroneous by reason of changed circumstances.

(c) A certification that any of the items in paragraph (a) of this provision exists will not necessarily result in withholding of an award under this solicitation. However, the certification will be considered in connection with a determination of the Offeror's responsibility. Failure of the Offeror to furnish a certification or provide such additional information as requested by the Contracting Officer may render the Offeror nonresponsible.

(d) Nothing contained in the foregoing shall be construed to require establishment of a system of records in order to render, in good faith, the certification required by paragraph (a) of this provision. The knowledge and information of an Offeror is not required to exceed that which is normally possessed by a prudent person in the ordinary course of business dealings.

(e) The certification in paragraph (a) of this provision is a material representation of fact upon which reliance was placed when making award. If it is later determined that the Offeror knowingly rendered an erroneous certification, in addition to other remedies available to the Government, the Contracting Officer may terminate the contract resulting from this solicitation for default.

(End of provision)

52.214-14 PLACE OF PERFORMANCE--SEALED BIDDING (APR 1985)

(a) The bidder, in the performance of any contract resulting from this solicitation, [ ] intends, [ ] does not intend [check applicable box] to use one or more plants or facilities located at a different address from the address of the bidder as indicated in this bid.

(b) If the bidder checks "intends" in paragraph (a) above, it shall insert in the spaces provided below the required information:

Place of Performance (Street, Address, City, County, State, Zip Code)	Name and Address of Owner and Operator of the Plant or Facility if Other than Bidder
_____	_____
_____	_____
_____	_____
_____	_____

(End of provision)

52.219-1 SMALL BUSINESS PROGRAM REPRESENTATIONS (APR 2002) - ALTERNATE I (APR 2002)

(a)(1) The North American Industry Classification System (NAICS) code for this acquisition is 336611.

(2) The small business size standard is 1000 employees.

(3) The small business size standard for a concern which submits an offer in its own name, other than on a construction or service contract, but which proposes to furnish a product which it did not itself manufacture, is 500 employees.

(b) Representations. (1) The offeror represents as part of its offer that it ( ) is, ( ) is not a small business concern.

(2) (Complete only if the offeror represented itself as a small business concern in paragraph (b)(1) of this provision.) The offeror represents, for general statistical purposes, that it ( ) is, ( ) is not a small disadvantaged business concern as defined in 13 CFR 124.1002.

(3) (Complete only if the offeror represented itself as a small business concern in paragraph (b)(1) of this provision.) The offeror represents as part of its offer that it ( ) is, ( ) is not a women-owned small business concern.

(4) (Complete only if the offeror represented itself as a small business concern in paragraph (b)(1) of this provision.) The offeror represents as part of its offer that it ( ) is, ( ) is not a veteran-owned small business concern.

(5) (Complete only if the offeror represented itself as a veteran-owned small business concern in paragraph (b)(4) of this provision.) The offeror represents as part of its offer that it ( ) is, ( ) is not a service-disabled veteran-owned small business concern.

(6) [Complete only if the offeror represented itself as a small business concern in paragraph (b)(1) of this provision.] The offeror represents, as part of its offer, that--

(i) It ( ) is, ( ) is not a HUBZone small business concern listed, on the date of this representation, on the List of Qualified HUBZone Small Business Concerns maintained by the Small Business Administration, and no material change in ownership and control, principal office, or HUBZone employee percentage has occurred since it was certified by the Small Business Administration in accordance with 13 CFR part 126; and

(ii) It ( ) is, ( ) is not a joint venture that complies with the requirements of 13 CFR part 126, and the representation in paragraph (b)(6)(i) of this provision is accurate for the HUBZone small business concern or concerns that are participating in the joint venture. (The offeror shall enter the name or names of the HUBZone small business concern or concerns that are participating in the joint venture:_____.) Each HUBZone small business concern participating in the joint venture shall submit a separate signed copy of the HUBZone representation.

(7) (Complete if offeror represented itself as disadvantaged in paragraph (b)(2) of this provision.) The offeror shall check the category in which its ownership falls:

____ Black American.

____ Hispanic American.

____ Native American (American Indians, Eskimos, Aleuts, or Native Hawaiians).

____ Asian-Pacific American (persons with origins from Burma, Thailand, Malaysia, Indonesia, Singapore, Brunei, Japan, China, Taiwan, Laos, Cambodia (Kampuchea), Vietnam, Korea, The Philippines, U.S. Trust Territory of the Pacific Islands (Republic of Palau), Republic of the Marshall Islands, Federated States of Micronesia, the Commonwealth of the Northern Mariana Islands, Guam, Samoa, Macao, Hong Kong, Fiji, Tonga, Kiribati, Tuvalu, or Nauru).

____ Subcontinent Asian (Asian-Indian) American (persons with origins from India, Pakistan, Bangladesh, Sri Lanka, Bhutan, the Maldives Islands, or Nepal).

____ Individual/concern, other than one of the preceding.

(c) Definitions. As used in this provision--

Service-disabled veteran-owned small business concern--

(1) Means a small business concern--

(i) Not less than 51 percent of which is owned by one or more service-disabled veterans or, in the case of any publicly owned business, not less than 51 percent of the stock of which is owned by one or more service-disabled veterans; and

(ii) The management and daily business operations of which are controlled by one or more service-disabled veterans or, in the case of a veteran with permanent and severe disability, the spouse or permanent caregiver of such veteran.

(2) Service-disabled veteran means a veteran, as defined in 38 U.S.C. 101(2), with a disability that is service-connected, as defined in 38 U.S.C. 101(16).

"Small business concern," means a concern, including its affiliates, that is independently owned and operated, not dominant in the field of operation in which it is bidding on Government contracts, and qualified as a small business under the criteria in 13 CFR Part 121 and the size standard in paragraph (a) of this provision.

Veteran-owned small business concern means a small business concern--

(1) Not less than 51 percent of which is owned by one or more veterans (as defined at 38 U.S.C. 101(2)) or, in the case of any publicly owned business, not less than 51 percent of the stock of which is owned by one or more veterans; and

(2) The management and daily business operations of which are controlled by one or more veterans.

"Women-owned small business concern," means a small business concern --

(1) That is at least 51 percent owned by one or more women or, in the case of any publicly owned business, at least 51 percent of the stock of which is owned by one or more women; or

(2) Whose management and daily business operations are controlled by one or more women.

(d) Notice.

(1) If this solicitation is for supplies and has been set aside, in whole or in part, for small business concerns, then the clause in this solicitation providing notice of the set-aside contains restrictions on the source of the end items to be furnished.

(2) Under 15 U.S.C. 645(d), any person who misrepresents a firm's status as a small, HUBZone small, small disadvantaged, or women-owned small business concern in order to obtain a contract to be awarded under the preference programs established pursuant to section 8(a), 8(d), 9, or 15 of the Small Business Act or any other provision of Federal law that specifically references section 8(d) for a definition of program eligibility, shall--

(i) Be punished by imposition of fine, imprisonment, or both;

(ii) Be subject to administrative remedies, including suspension and debarment; and

(iii) Be ineligible for participation in programs conducted under the authority of the Act.

(End of provision)

52.219-2 EQUAL LOW BIDS. (OCT 1995)

(a) This provision applies to small business concerns only.

(b) The bidder's status as a labor surplus area (LSA) concern may affect entitlement to award in case of tie bids. If the bidder wishes to be considered for this priority, the bidder must identify, in the following space, the LSA in which the costs to be incurred on account of manufacturing or production (by the bidder or the first-tier subcontractors) amount to more than 50 percent of the contract price.

_____

_____

(c) Failure to identify the labor surplus area as specified in paragraph (b) of this provision will preclude the bidder from receiving priority consideration. If the bidder is awarded a contract as a result of receiving priority consideration under this provision and would not have otherwise received award, the bidder shall perform the contract or cause the contract to be performed in accordance with the obligations of an LSA concern.

52.222-21 PROHIBITION OF SEGREGATED FACILITIES (FEB 1999)

(a) Segregated facilities, as used in this clause, means any waiting rooms, work areas, rest rooms and wash rooms, restaurants and other eating areas, time clocks, locker rooms and other storage or dressing areas, parking lots, drinking fountains, recreation or entertainment areas, transportation, and housing facilities provided for employees, that are segregated by explicit directive or are in fact segregated on the basis of race, color, religion, sex, or national origin because of written or oral policies or employee custom. The term does not include separate or single-user rest rooms or necessary dressing or sleeping areas provided to assure privacy between the sexes.

(b) The Contractor agrees that it does not and will not maintain or provide for its employees any segregated facilities at any of its establishments, and that it does not and will not permit its employees to perform their services at any location under its control where segregated facilities are maintained. The Contractor agrees that a breach of this clause is a violation of the Equal Opportunity clause in this contract.

(c) The Contractor shall include this clause in every subcontract and purchase order that is subject to the Equal Opportunity clause of this contract.

(End of clause)

52.222-22 PREVIOUS CONTRACTS AND COMPLIANCE REPORTS (FEB 1999)

The offeror represents that --

(a) ( ) It has, ( ) has not participated in a previous contract or subcontract subject to the Equal Opportunity clause of this solicitation;

(b) ( ) It has, ( ) has not, filed all required compliance reports; and

(c) Representations indicating submission of required compliance reports, signed by proposed subcontractors, will be obtained before subcontract awards.

(End of provision)

52.222-25 AFFIRMATIVE ACTION COMPLIANCE (APR 1984)

The offeror represents that

(a) [ ] it has developed and has on file, [ ] has not developed and does not have on file, at each establishment, affirmative action programs required by the rules and regulations of the Secretary of Labor (41 CFR 60-1 and 60-2), or

(b) [ ] has not previously had contracts subject to the written affirmative action programs requirement of the rules and regulations of the Secretary of Labor.

(End of provision)

52.223-13 CERTIFICATION OF TOXIC CHEMICAL RELEASE REPORTING (AUG 2003)

(a) Executive Order 13148, of April 21, 2000, Greening the Government through Leadership in Environmental Management, requires submission of this certification as a prerequisite for contract award.

(b) By signing this offer, the offeror certifies that--

(1) As the owner or operator of facilities that will be used in the performance of this contract that are subject to the filing and reporting requirements described in section 313 of the Emergency Planning and Community Right-to-Know Act of 1986 (EPCRA) (42 U.S.C. 11023) and section 6607 of the Pollution Prevention Act of 1990 (PPA) (42 U.S.C. 13106), the offeror will file and continue to file for such facilities for the life of the contract the Toxic Chemical Release Inventory Form (Form R) as described in sections 313(a) and (g) of EPCRA and section 6607 of PPA; or

(2) None of its owned or operated facilities to be used in the performance of this contract is subject to the Form R filing and reporting requirements because each such facility is exempt for at least one of the following reasons: (Check each block that is applicable.)

( ) (i) The facility does not manufacture, process, or otherwise use any toxic chemicals listed in 40 CFR 372.65;

( ) (ii) The facility does not have 10 or more full-time employees as specified in section 313.(b)(1)(A) of EPCRA 42 U.S.C. 11023(b)(1)(A);

( ) (iii) The facility does not meet the reporting thresholds of toxic chemicals established under section 313(f) of EPCRA, 42 U.S.C. 11023(f) (including the alternate thresholds at 40 CFR 372.27, provided an appropriate certification form has been filed with EPA);

( ) (iv) The facility does not fall within the following Standard Industrial Classification (SIC) codes or their corresponding North American Industry Classification System sectors:

(A) Major group code 10 (except 1011, 1081, and 1094.

(B) Major group code 12 (except 1241).

(C) Major group codes 20 through 39.

(D) Industry code 4911, 4931, or 4939 (limited to facilities that combust coal and/or oil for the purpose of generating power for distribution in commerce).

(E) Industry code 4953 (limited to facilities regulated under the Resource Conservation and Recovery Act, Subtitle C (42 U.S.C. 6921, et seq.), 5169, 5171, or 7389 (limited to facilities primarily engaged in solvent recovery services on a contract or fee basis); or

( ) (v) The facility is not located within the United States or its outlying areas.

(End of clause)

252.209-7001 DISCLOSURE OF OWNERSHIP OR CONTROL BY THE GOVERNMENT OF A TERRORIST COUNTRY (MAR 1998)

(a) "Definitions."

As used in this provision --

(a) "Government of a terrorist country" includes the state and the government of a terrorist country, as well as any political subdivision, agency, or instrumentality thereof.

(2) "Terrorist country" means a country determined by the Secretary of State, under section 6(j)(1)(A) of the Export Administration Act of 1979 (50 U.S.C. App. 2405(j)(i)(A)), to be a country the government of which has repeatedly provided support for such acts of international terrorism. As of the date of this provision, terrorist countries include: Cuba, Iran, Iraq, Libya, North Korea, Sudan, and Syria.

(3) "Significant interest" means --

(i) Ownership of or beneficial interest in 5 percent or more of the firm's or subsidiary's securities. Beneficial interest includes holding 5 percent or more of any class of the firm's securities in "nominee shares," "street names," or some other method of holding securities that does not disclose the beneficial owner;

(ii) Holding a management position in the firm, such as a director or officer;

(iii) Ability to control or influence the election, appointment, or tenure of directors or officers in the firm;

(iv) Ownership of 10 percent or more of the assets of a firm such as equipment, buildings, real estate, or other tangible assets of the firm; or

(v) Holding 50 percent or more of the indebtness of a firm.

(b) "Prohibition on award."

In accordance with 10 U.S.C. 2327, no contract may be awarded to a firm or a subsidiary of a firm if the government of a terrorist country has a significant interest in the firm or subsidiary or, in the case of a subsidiary, the firm that owns the subsidiary, unless a waiver is granted by the Secretary of Defense.

(c) "Disclosure."

If the government of a terrorist country has a significant interest in the Offeror or a subsidiary of the Offeror, the Offeror shall disclosure such interest in an attachment to its offer. If the Offeror is a subsidiary, it shall also disclose any significant interest the government of a terrorist country has in any firm that owns or controls the subsidiary. The disclosure shall include --

(1) Identification of each government holding a significant interest; and

(2) A description of the significant interest held by each government.

(End of provision)

252.225-7000 BUY AMERICAN ACT--BALANCE OF PAYMENTS PROGRAM CERTIFICATE (APR 2003)
(a) Definitions. Domestic end product, foreign end product, qualifying country, and qualifying country end product have the meanings given in the Buy American Act and Balance of Payments Program clause of this solicitation.

(b) Evaluation. The Government--

(1) Will evaluate offers in accordance with the policies and procedures of Part 225 of the Defense Federal Acquisition Regulation Supplement; and

(2) Will evaluate offers of qualifying country end products without regard to the restrictions of the Buy American Act or the Balance of Payments Program.

(c) Certifications and identification of country of origin.

(1) For all line items subject to the Buy American Act and Balance of Payments Program clause of this solicitation, the offeror certifies that--

(i) Each end product, except those listed in paragraph (c)(2) or (3) of this provision, is a domestic end product; and

(ii) Components of unknown origin are considered to have been mined, produced, or manufactured outside the United States or a qualifying country.

(2) The offeror certifies that the following end products are qualifying country end products:

(Line Item Number Country of Origin)

(Country of Origin)

(3) The following end products are other foreign end products:

(Line Item Number)

(Country of Origin) (If known)

(End of provision)

252.247-7022 REPRESENTATION OF EXTENT OF TRANSPORTATION BY SEA (AUG 1992)

(a) The Offeror shall indicate by checking the appropriate blank in paragraph (b) of this provision whether transportation of supplies by sea is anticipated under the resultant contract. The term supplies is defined in the Transportation of Supplies by Sea clause of this solicitation.

(b) Representation. The Offeror represents that it:

____ (1) Does anticipate that supplies will be transported by sea in the performance of any contract or subcontract resulting from this solicitation.

____ (2) Does not anticipate that supplies will be transported by sea in the performance of any contract or subcontract resulting from this solicitation.

(c) Any contract resulting from this solicitation will include the Transportation of Supplies by Sea clause. If the Offeror represents that it will not use ocean transportation, the resulting contract will also include the Defense FAR Supplement clause at 252.247-7024, Notification of Transportation of Supplies by Sea.

(End of provision)

This page was intentionally left blank for duplex printing.

SMALL, VETERAN-OWNED SMALL, SERVICE-DISABLED VETERAN-OWNED SMALL, HUBZONE SMALL, SMALL DISADVANTAGED AND WOMEN-OWNED SMALL BUSINESS SUBCONTRACTING PLAN

DATE:_____

CONTRACTOR: _____
ADDRESS: _____
SOLICITATION OR CONTRACT NUMBER: _____
ITEM/SERVICE: _____

The following, together with any attachments, is hereby submitted as a Subcontracting Plan to satisfy the applicable requirements of Public Law 95-507 as implemented by OFPP Policy Letter 80-2. NOTE: To assist you in preparing your subcontracting plan, the U.S. Army Corps of Engineers considers the following provisional goals reasonable and achievable for fiscal year 2004:

(a) Small Business: 57.2% of total planned subcontracting dollars

(b) Small Disadvantaged Businesses (SDB), including Historically Black Colleges and Universities or Minority Institutions: 10.0% of total planned subcontracting dollars*

(c) Women-owned small businesses (WOSB), 10.0% of total planned subcontracting dollars*

(d) Hubzone Small Business (HubSB), 3.0% of total planned subcontracting dollars *

(e) Service-Disabled Veteran-Owned 3.0% of total planned subcontracting dollars *

*small business concerns owned and controlled by.

1. (a) The following percentage goals (expressed in terms of a percentage of total planned subcontracting dollars) are applicable to the contract cited above or to the contract awarded under the solicitation cited.

(i) Small Business Concerns: _____% of total planned subcontracting dollars under this contract will go to subcontractors who are small business concerns.

(ii) Veteran-Owned Small Business Concerns: _____ % of total planned subcontracting dollars under this contract will go to subcontractors who are veteran-owned small business concerns.

(iii) Service-Disabled Veteran-Owned Small Business Concerns: _____% of total planned subcontracting dollars under this contract will go to subcontractors who are service-disabled veteran-owned small business concerns.

(iv) HUBZone Small Business Concerns: _____ % of total planned subcontracting dollars under this contract will go to subcontractors who are small business concerns located in a historically underutilized business zone which is an area located within one or more qualified census tracts, qualified nonmetropolitan counties, or lands within the external boundaries of an

Indian reservation and appear on the List of Qualified HUBZone Small Business Concerns maintained by the SBA. (http://www.sba.gov/hubzone/).

(v) Small Disadvantaged Business Concerns: _____% of total planned subcontracting dollars under this contract will go to subcontractors who are small concerns owned and controlled by socially and economically disadvantaged individuals. This percentage is included in the percentage shown under 1.(a)(i) above, as a subset.

(vi) Women-Owned Small Business Concerns: _____% of total planned subcontracting dollars under this contract will go to subcontractors who are women-owned small business concerns. This percentage is included in the percentage shown under 1.(a)(i) above, as a subset.

(b) The following dollar values correspond to the percentage goals shown in (a) above.

(i) Total dollars planned to be subcontracted to small business concerns:
$_____.

(ii) Total dollars planned to be subcontracted to veteran-owned small business concerns:
$_____.

(iii) Total dollars planned to be subcontracted to service-disabled veteran-owned small business concerns:
$_____.

(iv) Total dollars planned to be subcontracted to HUBZone small business concerns:
$_____.

(v) Total dollars planned to be subcontracted to small disadvantaged business concerns:
$_____. This dollar amount is included in the amount shown under 1.(b)(i) above, as a subset.

(vi) Total dollars planned to be subcontracted to women-owned small business concerns:
$_____. This dollar amount is included in the amount shown under 1.(b)(i) above, as a subset.

(c) The total estimated dollar value of all planned subcontracting (to all types of business concerns) under this contract is $_____.

(d) The following principal products and/or services will be subcontracted under this contract, and the distribution among small, veteran-owned small, service-disabled veteran-owned small, HUBZone small business, small disadvantaged, and women-owned small business concerns is as follows:

(Products/services planned to be subcontracted to small business concerns are identified by *, veteran-owned small business concerns by **, service-disabled veteran-owned small by ***, HUBZone small business concerns by ****, small disadvantaged business concerns by ***** and women-owned small business concerns by ******)

(Attachment may be used if additional space is required)

(e) The following method was used in developing subcontract goals (i.e., statement explaining how the product and service areas to be subcontracted were established, how the areas to be subcontracted to small, veteran-owned small, service-disabled veteran-owned small, HUBZone small, small disadvantaged, and women-owned small business concerns were determined, and how small, veteran-owned small, service-disabled veteran-owned small, HUBZone small, small disadvantaged, and women-owned small business concerns capabilities were determined, to include identification of source lists utilized in making those determination).

(f) Indirect and over head costs [_____] have [_____] have not been included in the goals specified in 1(a) and 1(b).

(g) If "have" is checked, explain the method used in determining the proportionate share of indirect and overhead cost to be allocated as subcontracts to small business concerns, veteran-owned small, service-disabled veteran-owned small, service-disabled veteran-owned small, HUBZone small business concerns, small disadvantaged business concerns, and women-owned small business concerns.

2. The following individual will administer the subcontracting program:

Name: _____
Address & Telephone: _____
Telephone: _____

This individual's specific duties, as they relate to the firm's subcontracting program are as follows:

General overall responsibility for this company's Small Business Program, the development, preparation and execution of individual subcontracting plans and for monitoring performance relative to contractual subcontracting requirements contained in this plan, including but not limited to:

(a) Developing and maintaining bidders lists of small, veteran-owned small, service-disabled veteran-owned small, HUBZone small, small disadvantaged, and women-owned small business concerns from all possible sources.

(b) Ensuring that procurement packages are structured to permit small, veteran-owned small, service-disabled veteran-owned small, HUBZone small, small disadvantaged, and women-owned business concerns to participate to the maximum extent possible.

(c) Assuring inclusion of small, veteran-owned small, service-disabled veteran-owned small, HUBZone small, small disadvantaged, and women-owned business concerns in all solicitations for products or services which they are capable of providing.

(d) Reviewing solicitations to remove statements, clauses, etc., which may tend to restrict or prohibit small, veteran-owned small, service-disabled veteran-owned small, HUBZone small, small disadvantaged, and women-owned business participation.

(e) Ensuring periodic rotation of potential subcontractors on bidders lists.

(f) Ensuring that the bid proposal review board documents its reasons for rejecting low bids submitted by small, veteran-owned small, service-disabled veteran-owned small, HUBZone small, small disadvantaged, and women-owned business concerns.

(g) Ensuring the establishment and maintenance of records of solicitations and subcontract award activity.

(h) Attending or arranging for attendance of company counselors at Business Opportunity Workshops, Minority Business Enterprise Seminars, Trade Fairs, etc.

(i) Conducting or arranging for conduct of motivational training for purchasing personnel pursuant to the intent of P.O. 95-507.

(j) Monitoring attainment of proposed goals.

(k) Preparing and submitting periodic subcontracting reports required.

(l) Coordinating contractor's activities during the conduct of compliance reviews by Federal Agencies.

(m) Coordinating the conduct of contractor's activities involving its small, veteran-owned small, service-disabled veteran-owned small, HUBZone small, small disadvantaged, and women-owned business subcontracting program.

(n) Additions to (or deletions from) the duties specified above are as follows:

_____

_____

_____

3. The following efforts will be taken to assure that small, veteran-owned small, service-disabled veteran-owned small, HUBZone, small, small disadvantaged, and women-owned business concerns will have an equitable opportunity to compete for subcontracts:

(a) Outreach efforts will be made as follows:

(i) Contacts with minority and small business trade associations

(ii) Contacts with business development organizations

(iii) Attendance at small and minority business procurement conferences

(iv) Sources will be requested from SBA's PASS system.

(b) The following internal efforts will be made to guide and encourage buyers:

(i) Workshops, seminars and training programs will be conducted

(ii) Activities will be monitored to evaluate compliance with this subcontracting plan.

(c) Small, veteran-owned small, service-disabled veteran-owned small, HUBZone small, small disadvantaged, and women-owned business concern source lists, guides and other data identifying small, veteran-owned small, service-disabled veteran-owned small, HUBZone small, small disadvantaged, and women-owned business concerns will be maintained and utilized by buyers in soliciting subcontracts.

(d) Additions to (or deletions from) the above listed efforts are as follows:

4. The bidder (contractor) agrees that the clause entitled Utilization of Small, veteran-owned small, service-disabled veteran-owned small, HUBZone Small, Small Disadvantaged, and Women-Owned Small Business Concerns will be included in all subcontracts which offer further subcontracting opportunities, and all subcontractors except small business concerns who receive subcontracts in excess of $500,000 will be required to adopt and comply with a subcontracting plan similar to this one. Such plans will be reviewed by comparing them with the provisions of Public Law 95-507, and assuring that all minimum requirements of an acceptable subcontracting plan have been satisfied. The acceptability of percentage goals shall be determined on a case-by-case basis depending on the supplies/services involved, the availability of potential small,

veteran-owned small, service-disabled veteran-owned small, HUBZone small, small disadvantaged, and women-owned subcontractors, and prior experience. Once approved and implemented, plans will be monitored through the submission of periodic reports, and/or, as time and availability of funds permit, periodic visits to subcontractors facilities to review applicable records and subcontracting program progress.

5. The bidder (contractor) agrees to submit such periodic reports and cooperate in any studies or surveys as may be required by the contracting agency or the Small business Administration in order to determine the extent of compliance by the bidder with the subcontracting plan and with the clause entitled Utilization of Small, veteran-owned small, service-disabled veteran-owned small, HUBZone Small, Small Disadvantaged, and Women-Owned Small Business Concerns, contained in the contract.

6. The bidder (contractor) agrees that he will maintain at least the following types of records to document compliance with this subcontracting plan:

(a) Small, veteran-owned small, service-disabled veteran-owned small, HUBZone Small, Small Disadvantaged, and Women-Owned Business concern source lists, guides and other data identifying SB/HZSB/SDB/WO vendors.

(b) Organizations contacted for small, veteran-owned small, service-disabled veteran-owned small, HUBZone small, small disadvantaged, and women-owned business sources.

(c) On a contract-by-contract basis, records on all subcontract solicitations over $100,000, indicating on each solicitation (1) whether small business concerns were solicited, and if not, why not; (2) whether veteran-owned small business concerns were solicited, and if not, why not, (3) whether service-disabled veteran-owned small business concerns were solicited, and if not, why not; (4) whether HUBZone small business concerns were solicited, and if not, why not; (5) whether small disadvantaged business concerns were solicited, and if not, why not; (6) whether women-owned business concerns were solicited and if not, why not; and (7) reasons for the failure of solicited small, veteran-owned small, service-disabled veteran-owned small, HUBZone small, small disadvantaged, or women-owned business concerns to receive the subcontract award.

(d) Records to support other outreach efforts: Contacts with Minority and Small Business Trade Associations, etc. Attendance at small and minority business procurement conferences and trade fairs.

(e) Records to support internal activities to guide and encourage buyers: Workshops, seminars, training programs, etc. Monitoring activities to evaluate compliance.

(f) On a contract-by-contract basis, records to support subcontract award data to include name and address or subcontractor .

(g) Records to be maintained in addition to the above are as follows:

Signed: _____
Typed Name: _____
Title: _____
Date: _____

Plan Accepted By: _____
Contracting Officer

Date: _____

NOTE TO CONTRACTING OFFICER: Upon incorporation of a plan into the contract, indicate herein the estimated dollar value of the contract:

$ _____.

This page was intentionally left blank for duplex printing.

52.204-6	Data Universal Numbering System (DUNS) Number	OCT 2003
52.214-3	Amendments To Invitations For Bids	DEC 1989
52.214-4	False Statements In Bids	APR 1984
52.214-5	Submission Of Bids	MAR 1997
52.214-6	Explanation To Prospective Bidders	APR 1984
52.214-7	Late Submissions, Modifications, and Withdrawals of Bids	NOV 1999
52.214-10	Contract Award--Sealed Bidding	JUL 1990
52.214-12	Preparation Of Bids	APR 1984
52.214-5000	Apparent Clerical Mistakes	MAR 2000
52.216-1	Type Of Contract	APR 1984
52.232-13	Notice Of Progress Payments	APR 1984
52.233-2	Service Of Protest	AUG 1996

This page was intentionally left blank for duplex printing.

52.204-6 DATA UNIVERSAL NUMBERING SYSTEM (DUNS) NUMBER (OCT 2003)

(a) The offeror shall enter, in the block with its name and address on the cover page of its offer, the annotation "DUNS" or "DUNS+4" followed by the DUNS number or "DUNS+4" that identifies the offeror's name and address exactly as stated in the offer. The DUNS number is a nine-digit number assigned by Dun and Bradstreet, Inc. The DUNS+4 is the DUNS number plus a 4-character suffix that may be assigned at the discretion of the offeror to establish additional CCR records for identifying alternative Electronic Funds Transfer (EFT) accounts (see Subpart 32.11) for the same parent concern.

(b) If the offeror does not have a DUNS number, it should contact Dun and Bradstreet directly to obtain one.

(1) An offeror may obtain a DUNS number--

(i) If located within the United States, by calling Dun and Bradstreet at 1-866-705-5711 or via the Internet at http://www.dnb.com; or

(ii) If located outside the United States, by contacting the local Dun and Bradstreet office.

(2) The offeror should be prepared to provide the following information:

(i) Company legal business name.

(ii) Tradestyle, doing business, or other name by which your entity is commonly recognized.

(iii) Company physical street address, city, state and Zip Code.

(iv) Company mailing address, city, state and Zip Code (if separate from physical).

(v) Company telephone number.

(vi) Date the company was started.

(vii) Number of employees at your location.

(viii) Chief executive officer/key manager.

(ix) Line of business (industry).

(x) Company Headquarters name and address (reporting relationship within your entity).

(End of provision)

52.214-3 AMENDMENTS TO INVITATIONS FOR BIDS (DEC 1989)

(a) If this solicitation is amended, then all terms and conditions which are not modified remain unchanged.

(b) Bidders shall acknowledge receipt of any amendment to this solicitation (1) by signing and returning the amendment, (2) by identifying the amendment number and date in the space provided for this purpose on the form for submitting a bid, (3) by letter or telegram, or (4) by facsimile, if facsimile bids are authorized in the solicitation. The Government must receive the acknowledgment by the time and at the place specified for receipt of bids.

(End of provision)

52.214-4 FALSE STATEMENTS IN BIDS (APR 1984)

Bidders must provide full, accurate, and complete information as required by this solicitation and its attachments. The penalty for making false statements in bids is prescribed in 18 U.S.C. 1001.

(End of provision)

52.214-5 SUBMISSION OF BIDS (MAR 1997)

(a) Bids and bid modifications shall be submitted in sealed envelopes or packages (unless submitted by electronic means) (1) addressed to the office specified in the solicitation, and (2) showing the time and date specified for receipt, the solicitation number, and the name and address of the bidder.

(b) Bidders using commercial carrier services shall ensure that the bid is addressed and marked on the outermost envelope or wrapper as prescribed in subparagraphs (a)(1) and (2) of this provision when delivered to the office specified in the solicitation.

(c) Telegraphic bids will not be considered unless authorized by the solicitation; however, bids may be modified or withdrawn by written or telegraphic notice.

(d) Facsimile bids, modifications, or withdrawals, will not be considered unless authorized by the solicitation.

(e) Bids submitted by electronic commerce shall be considered only if the electronic commerce method was specifically stipulated or permitted by the solicitation.

(End of provision)

52.214-6 EXPLANATION TO PROSPECTIVE BIDDERS (APR 1984)

Any prospective bidder desiring an explanation or interpretation of the solicitation, drawings, specifications, etc., must request it in writing soon enough to allow a reply to reach all prospective bidders before the submission of their bids. Oral explanations or instructions given before the award of a contract will not be binding. Any information given a prospective bidder concerning a solicitation will be furnished promptly to all other prospective bidders as an amendment to the solicitation, if that information is necessary in submitting bids or if the lack of it would be prejudicial to other prospective bidders.

(End of provision)

52.214-7 LATE SUBMISSIONS, MODIFICATIONS, AND WITHDRAWALS OF BIDS (NOV 1999)

(a) Bidders are responsible for submitting bids, and any modifications or withdrawals, so as to reach the Government office designated in the invitation for bids (IFB) by the time specified in the IFB. If no time is specified in the IFB, the time for receipt is 4:30 p.m., local time, for the designated Government office on the date that bids are due.

(b)(1) Any bid, modification, or withdrawal received at the Government office designated in the IFB after the exact time specified for receipt of bids is “late” and will not be considered unless it is received before award is made, the Contracting Officer determines that accepting the late bid would not unduly delay the acquisition; and--

(i) If it was transmitted through an electronic commerce method authorized by the IFB, it was received at the initial point of entry to the Government infrastructure not later than 5:00 p.m. one working day prior to the date specified for receipt of bids; or

(ii) There is acceptable evidence to establish that it was received at the Government installation designated for receipt of bids and was under the Government's control prior to the time set for receipt of bids.

(2) However, a late modification of an otherwise successful bid that makes its terms more favorable to the Government, will be considered at any time it is received and may be accepted.

(c) Acceptable evidence to establish the time of receipt at the Government installation includes the time/date stamp of that installation on the bid wrapper, other documentary evidence of receipt maintained by the installation, or oral testimony or statements of Government personnel.

(d) If an emergency or unanticipated event interrupts normal Government processes so that bids cannot be received at the Government office designated for receipt of bids by the exact time specified in the IFB and urgent Government requirements preclude amendment of the IFB, the time specified for receipt of bids will be deemed to be extended to the same time of day specified in the solicitation on the first work day on which normal Government processes resume.

(e) Bids may be withdrawn by written notice received at any time before the exact time set for receipt of bids. If the IFB authorizes facsimile bids, bids may be withdrawn via facsimile received at any time before the exact time set for receipt of bids, subject to the conditions specified in the provision at 52.214-31, Facsimile Bids. A bid may be withdrawn in person by a bidder or its authorized representative if, before the exact time set for receipt of bids, the identity of the person requesting withdrawal is established and the person signs a receipt for the bid.

(End of provision)

52.214-10 CONTRACT AWARD--SEALED BIDDING (JUL 1990)

(a) The Government will evaluate bids in response to this solicitation without discussions and will award a contract to the responsible bidder whose bid, conforming to the solicitation, will be most advantageous to the Government considering only price and the price-related factors specified elsewhere in the solicitation.

(b) The Government may (1) reject any or all bids, (2) accept other than the lowest bid, and (3) waive informalities or minor irregularities in bids received.

(c) The Government may accept any item or group of items of a bid, unless the bidder qualifies the bid by specific limitations. Unless otherwise provided in the Schedule, bids may be submitted for quantities less than those specified. The Government reserves the right to make an award on any item for a quantity less than the quantity offered, at the unit prices offered, unless the bidder specifies otherwise in the bid.

(d) A written award or acceptance of a bid mailed or otherwise furnished to the successful bidder within the time for acceptance specified in the bid shall result in a binding contract without further action by either party.

(e) The Government may reject a bid as nonresponsive if the prices bid are materially unbalanced between line items or subline items. A bid is materially unbalanced when it is based on prices significantly less than cost for some work and prices which are significantly overstated in relation to cost for other work, and if there is a reasonable doubt that the bid will result in the lowest overall cost to the Government even though it may be the low evaluated bid, or if it is so unbalanced as to be tantamount to allowing an advance payment.

(End of provision)

52.214-12 PREPARATION OF BIDS (APR 1984)

(a) Bidders are expected to examine the drawings, specifications, Schedule, and all instructions. Failure to do so will be at the bidder's risk.

(b) Each bidder shall furnish the information required by the solicitation. The bidder shall sign the bid and print or type its name on the Schedule and each continuation sheet on which it makes an entry. Erasures or other changes must be initialed by the person signing the bid. Bids signed by an agent shall be accompanied by evidence of that agent's authority, unless that evidence has been previously furnished to the issuing office.

(c) For each item offered, bidders shall (1) show the unit price, including, unless otherwise specified, packaging, packing, and preservation and (2) enter the extended price for the quantity of each item offered in the "Amount" column of the Schedule. In case of discrepancy between a unit price and an extended price, the unit price will be presumed to be correct, subject, however, to correction to the same extent and in the same manner as any other mistake.

(d) Bids for supplies or services other than those specified will not be considered unless authorized by the solicitation.

(e) Bidders must state a definite time for delivery of supplies or for performance of services, unless otherwise specified in the solicitation.

(f) Time, if stated as a number of days, will include Saturdays, Sundays, and holidays.

(End of provision)

52.214-5000 APPARENT CLERICAL MISTAKES (MAR 1995)--EFARS

(a) For the purpose of initial evaluations of bids, the following will be utilized in the resolving arithmetic discrepancies found on the face of bidding schedule as submitted by the bidder:

(1) Obviously misplaced decimal points will be corrected;
(2) Discrepancy between unit price and extended price, the unit price will govern;
(3) Apparent errors in extension of unit prices will be corrected;
(4) Apparent errors in addition of lump-sum and extended prices will be corrected.

(b) For the purpose of bid evaluation, the government will proceed on the assumption that the bidder intends his bid to be evaluated on basis of the unit prices, the totals arrived at by resolution of arithmetic discrepancies as provided above and the bid will be so reflected on the abstract of bids.

(c) These correction procedures shall not be used to resolve any ambiguity concerning which bid is low.

(End of statement)

52.216-1 TYPE OF CONTRACT (APR 1984)

The Government contemplates award of a fixed priced firm contract resulting from this solicitation.

(End of clause)

52.232-13 NOTICE OF PROGRESS PAYMENTS (APR 1984)

The need for customary progress payments conforming to the regulations in Subpart 32.5 of the Federal Acquisition Regulation (FAR) will not be considered as a handicap or adverse factor in the award of the contract. The Progress Payments clause included in this solicitation will be included in any resulting contract, modified or altered if necessary in accordance with subsection 52.232-16 and its Alternate I of the FAR. Even though the clause is included in the contract, the clause shall be inoperative during any time the contractor's accounting system and controls are determined by the Government to be inadequate for segregation and accumulation of contract costs.

(End of clause)

52.233-2 SERVICE OF PROTEST (AUG 1996)

(a) Protests, as defined in section 33.101 of the Federal Acquisition Regulation, that are filed directly with an agency, and copies of any protests that are filed with the General Accounting Office (GAO), shall be served on the Contracting Officer (addressed as follows) by obtaining written and dated acknowledgment of receipt from Mr. Robert Sharamatew, Chief, Contracting Division, Contracting Officer, U.S. Army Corps of Engineers, Philadelphia District, Wanamaker Building, 100 Penn Square East, Room 643, Phildelphia, Pennsylvania 19107-3390.

(b) The copy of any protest shall be received in the office designated above within one day of filing a protest with the GAO.

(End of provision)

This page was intentionally left blank for duplex printing.

PART IV
REPRESENTATIONS & INSTRUCTIONS
SECTION M

TABLE OF CONTENTS

CLAUSE PAGE

M01 AWARD 2

PART IV
REPRESENTATIONS & INSTRUCTIONS
SECTION M

M01 AWARD

Award will be made as a whole to the lowest, responsive and responsible offeror.

52.217-5 EVALUATION OF OPTIONS (JUL 1990)

Except when it is determined in accordance with FAR 17.206(b) not to be in the Government's best interests, the Government will evaluate offers for award purposes by adding the total price for all options to the total price for the basic requirement. Evaluation of options will not obligate the Government to exercise the option(s).

(End of provision)